International
IOR Rectifier

DIGITAL AUDIO MOSFET

IRFB5620PbF

Features

- Key Parameters Optimized for Class-D Audio Amplifier Applications
- Low R_{DSON} for Improved Efficiency
- Low Q_G and Q_{SW} for Better THD and Improved Efficiency
- Low Q_{RR} for Better THD and Lower EMI
- 175°C Operating Junction Temperature for Ruggedness
- Can Deliver up to 300W per Channel into 8Ω Load in Half-Bridge Configuration Amplifier

Key Parameters		
V_{DS}	200	V
$R_{DS(ON)}$ typ. @ 10V	60	mΩ
Q_g typ.	25	nC
Q_{sw} typ.	9.8	nC
$R_{G(int)}$ typ.	2.6	Ω
T_J max	175	°C

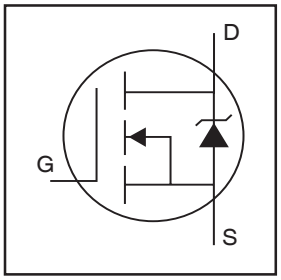

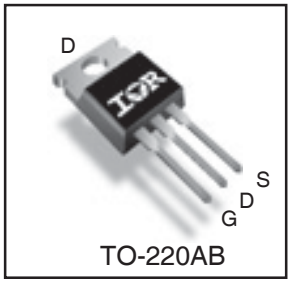

G	D	S
Gate	Drain	Source

Description

This Digital Audio MOSFET is specifically designed for Class-D audio amplifier applications. This MOSFET utilizes the latest processing techniques to achieve low on-resistance per silicon area. Furthermore, Gate charge, body-diode reverse recovery and internal Gate resistance are optimized to improve key Class-D audio amplifier performance factors such as efficiency, THD and EMI. Additional features of this MOSFET are 175°C operating junction temperature and repetitive avalanche capability. These features combine to make this MOSFET a highly efficient, robust and reliable device for ClassD audio amplifier applications.

Absolute Maximum Ratings

	Parameter	Max.	Units
V_{DS}	Drain-to-Source Voltage	200	V
V_{GS}	Gate-to-Source Voltage	±20	
I_D @ T_C = 25°C	Continuous Drain Current, V_{GS} @ 10V	25	A
I_D @ T_C = 100°C	Continuous Drain Current, V_{GS} @ 10V	18	
I_{DM}	Pulsed Drain Current ①	100	
P_D @T_C = 25°C	Power Dissipation ④	144	W
P_D @T_C = 100°C	Power Dissipation ④	72	
	Linear Derating Factor	0.96	W/°C
T_J T_{STG}	Operating Junction and Storage Temperature Range	-55 to + 175	°C
	Soldering Temperature, for 10 seconds (1.6mm from case)	300	
	Mounting torque, 6-32 or M3 screw	10lb·in (1.1N·m)	

Thermal Resistance

	Parameter	Typ.	Max.	Units
$R_{\theta JC}$	Junction-to-Case ④	——	1.045	°C/W
$R_{\theta CS}$	Case-to-Sink, Flat, Greased Surface	0.50	——	
$R_{\theta JA}$	Junction-to-Ambient ④	——	62	

Notes ① through ⑤ are on page 2

Electrical Characteristics @ T_J = 25°C (unless otherwise specified)

	Parameter	Min.	Typ.	Max.	Units	Conditions
BV_{DSS}	Drain-to-Source Breakdown Voltage	200	—	—	V	V_{GS} = 0V, I_D = 250μA
$\Delta BV_{DSS}/\Delta T_J$	Breakdown Voltage Temp. Coefficient	—	0.22	—	V/°C	Reference to 25°C, I_D = 1mA
$R_{DS(on)}$	Static Drain-to-Source On-Resistance	—	60	72.5	mΩ	V_{GS} = 10V, I_D = 15A ③
$V_{GS(th)}$	Gate Threshold Voltage	3.0	—	5.0	V	V_{DS} = V_{GS}, I_D = 100μA
$\Delta V_{GS(th)}/\Delta T_J$	Gate Threshold Voltage Coefficient	—	-14	—	mV/°C	
I_{DSS}	Drain-to-Source Leakage Current	—	—	20	μA	V_{DS} = 200V, V_{GS} = 0V
		—	—	250		V_{DS} = 200V, V_{GS} = 0V, T_J = 125°C
I_{GSS}	Gate-to-Source Forward Leakage	—	—	100	nA	V_{GS} = 20V
	Gate-to-Source Reverse Leakage	—	—	-100		V_{GS} = -20V
g_{fs}	Forward Transconductance	37	—	—	S	V_{DS} = 50V, I_D = 15A
Q_g	Total Gate Charge	—	25	38	nC	
Q_{gs1}	Pre-Vth Gate-to-Source Charge	—	6.3	—		V_{DS} = 100V
Q_{gs2}	Post-Vth Gate-to-Source Charge	—	1.9	—		V_{GS} = 10V
Q_{gd}	Gate-to-Drain Charge	—	7.9	—		I_D = 15A
Q_{godr}	Gate Charge Overdrive	—	9.3	—		See Fig. 6 and 19
Q_{sw}	Switch Charge (Q_{gs2} + Q_{gd})	—	9.8	—		
$R_{G(int)}$	Internal Gate Resistance	—	2.6	5.0	Ω	
$t_{d(on)}$	Turn-On Delay Time	—	8.6	—	ns	V_{DD} = 100V, V_{GS} = 10V ③
t_r	Rise Time	—	14.6	—		I_D = 15A
$t_{d(off)}$	Turn-Off Delay Time	—	17.1	—		R_G = 2.4Ω
t_f	Fall Time	—	9.9	—		
C_{iss}	Input Capacitance	—	1710	—	pF	V_{GS} = 0V
C_{oss}	Output Capacitance	—	125	—		V_{DS} = 50V
C_{rss}	Reverse Transfer Capacitance	—	30	—		f = 1.0MHz, See Fig.5
C_{oss}	Effective Output Capacitance	—	138	—		V_{GS} = 0V, V_{DS} = 0V to 160V
L_D	Internal Drain Inductance	—	4.5	—	nH	Between lead, 6mm (0.25in.) from package and center of die contact 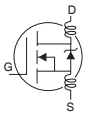
L_S	Internal Source Inductance	—	7.5	—		

Avalanche Characteristics

	Parameter	Typ.	Max.	Units
E_{AS}	Single Pulse Avalanche Energy②	—	113	mJ
I_{AR}	Avalanche Current ⑤	See Fig. 14, 15, 17a, 17b		A
E_{AR}	Repetitive Avalanche Energy ⑤			mJ

Diode Characteristics

	Parameter	Min.	Typ.	Max.	Units	Conditions
I_S @ T_C = 25°C	Continuous Source Current (Body Diode)	—	—	25	A	MOSFET symbol showing the integral reverse p-n junction diode. 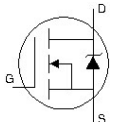
I_{SM}	Pulsed Source Current (Body Diode) ①	—	—	100		
V_{SD}	Diode Forward Voltage	—	—	1.3	V	T_J = 25°C, I_S = 15A, V_{GS} = 0V ③
t_{rr}	Reverse Recovery Time	—	98	147	ns	T_J = 25°C, I_F = 15A , V_R = 160V
Q_{rr}	Reverse Recovery Charge	—	491	737	nC	di/dt = 100A/μs ③

Notes:

① Repetitive rating; pulse width limited by max. junction temperature.

② Starting T_J = 25°C, L = 1.00mH, R_G = 25Ω, I_{AS} = 15A.

③ Pulse width ≤ 400μs; duty cycle ≤ 2%.

④ R_θ is measured at T_J of approximately 90°C.

⑤ Limited by Tjmax. See Figs. 14, 15, 17a, 17b for repetitive avalanche information

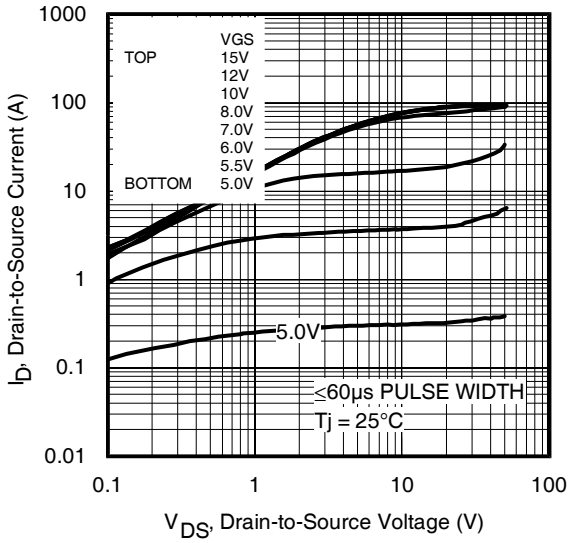

Fig 1. Typical Output Characteristics

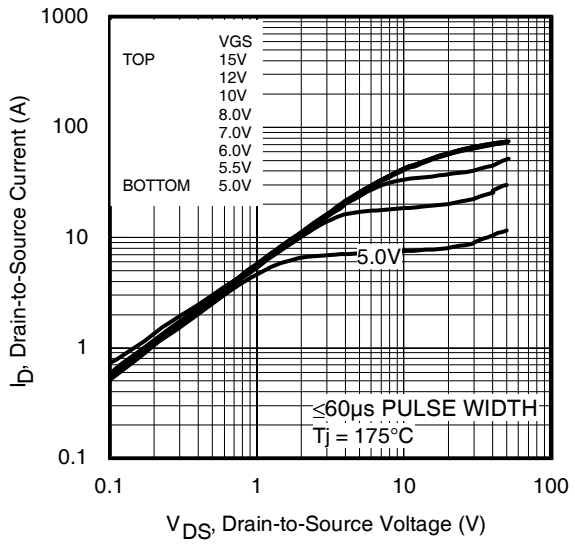

Fig 2. Typical Output Characteristics

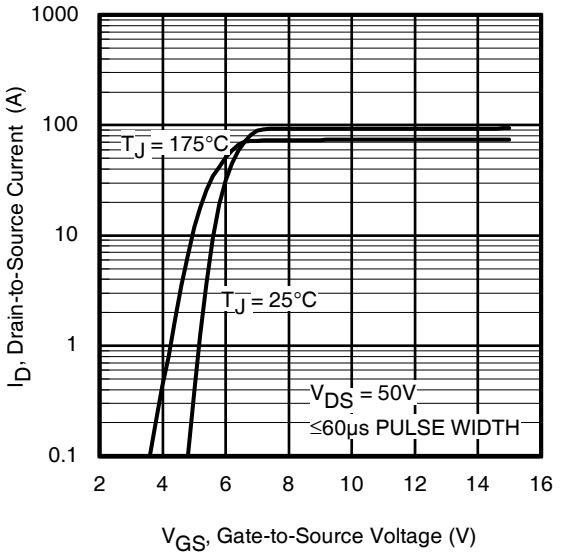

Fig 3. Typical Transfer Characteristics

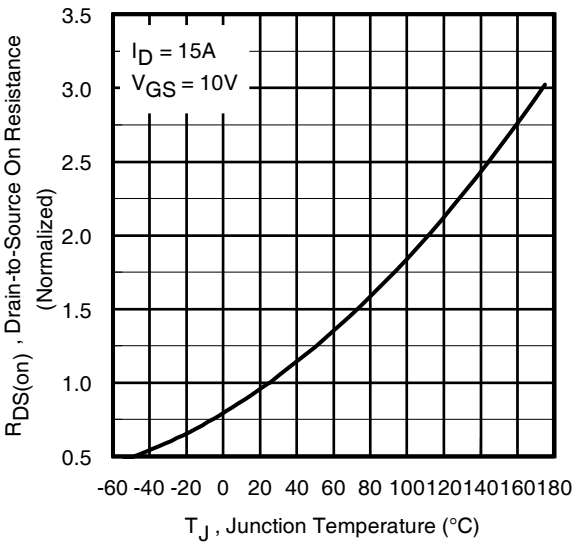

Fig 4. Normalized On-Resistance vs. Temperature

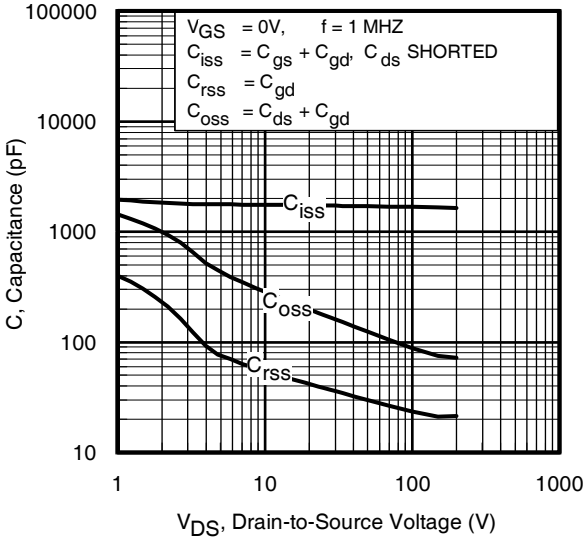

Fig 5. Typical Capacitance vs.Drain-to-Source Voltage

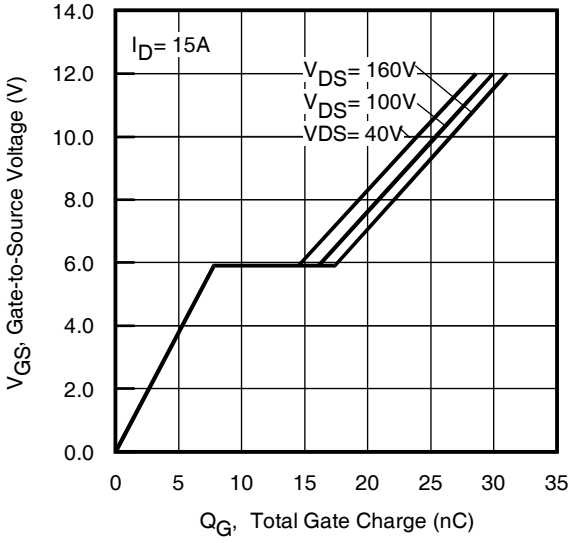

Fig 6. Typical Gate Charge vs.Gate-to-Source Voltage

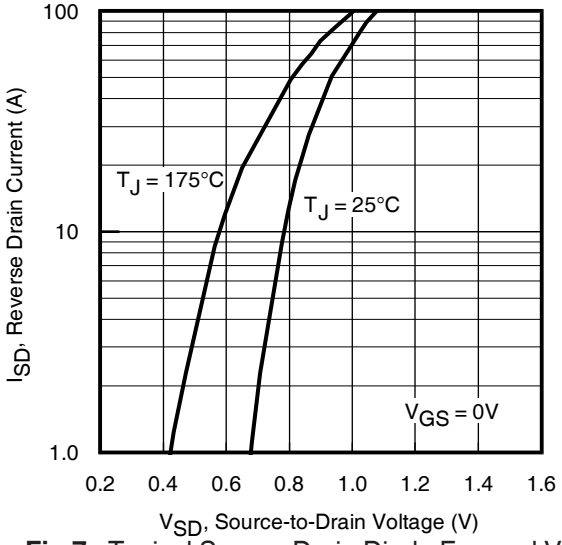

Fig 7. Typical Source-Drain Diode Forward Voltage

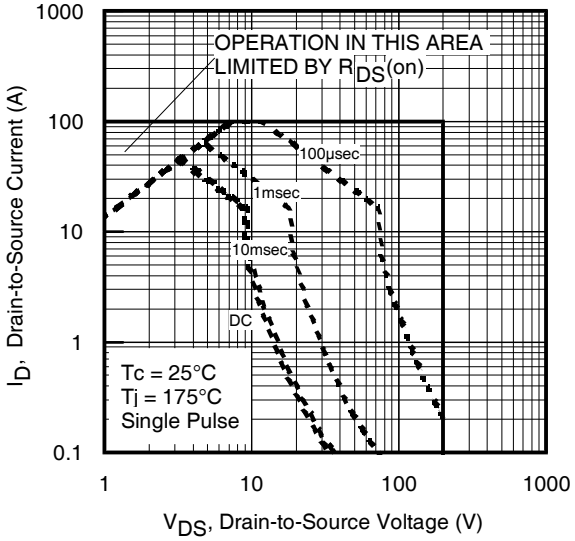

Fig 8. Maximum Safe Operating Area

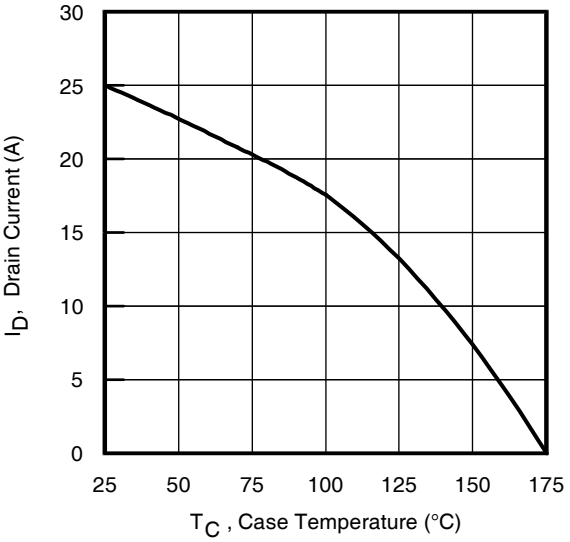

Fig 9. Maximum Drain Current vs. Case Temperature

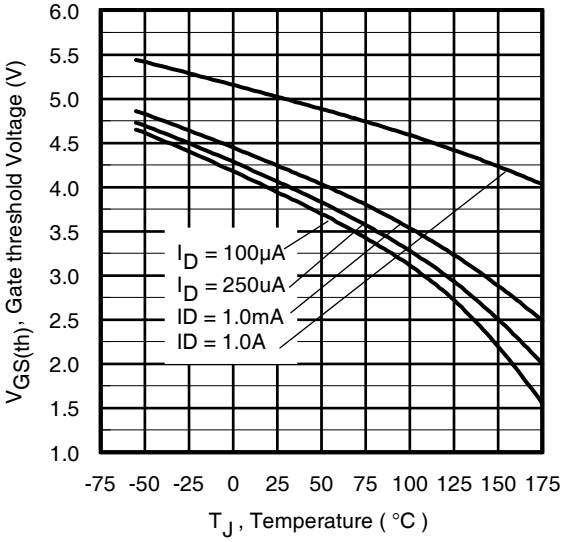

Fig 10. Threshold Voltage vs. Temperature

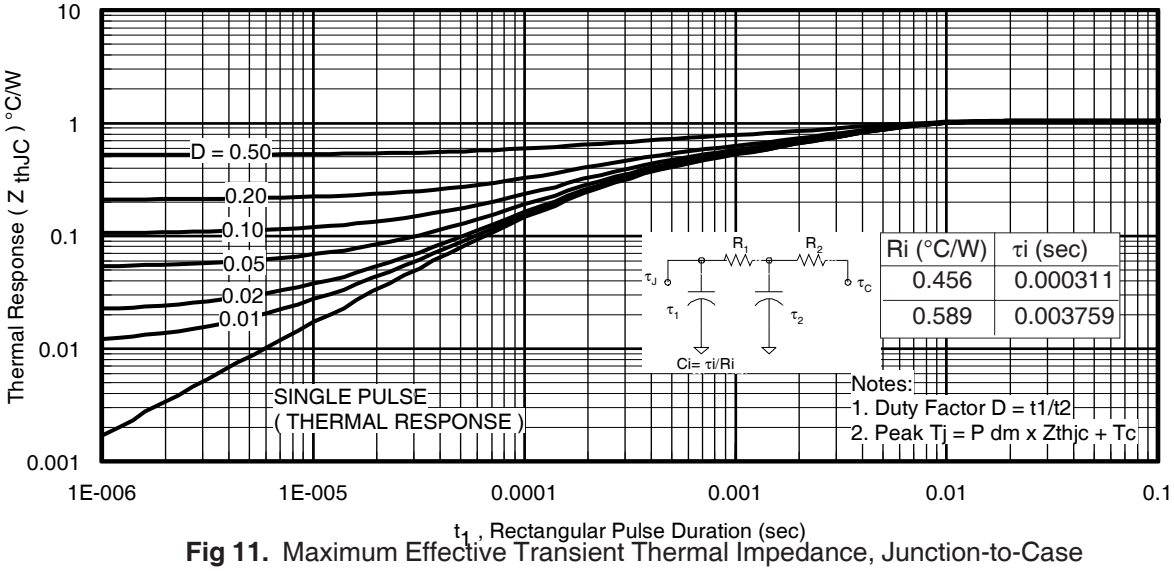

Fig 11. Maximum Effective Transient Thermal Impedance, Junction-to-Case

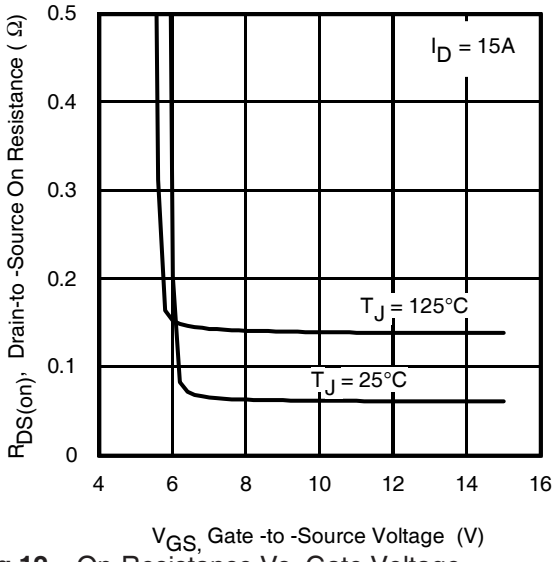

Fig 12. On-Resistance Vs. Gate Voltage

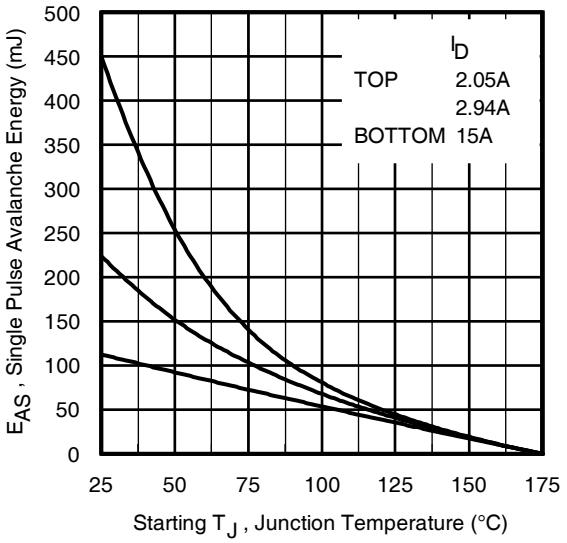

Fig 13. Maximum Avalanche Energy Vs. Drain Current

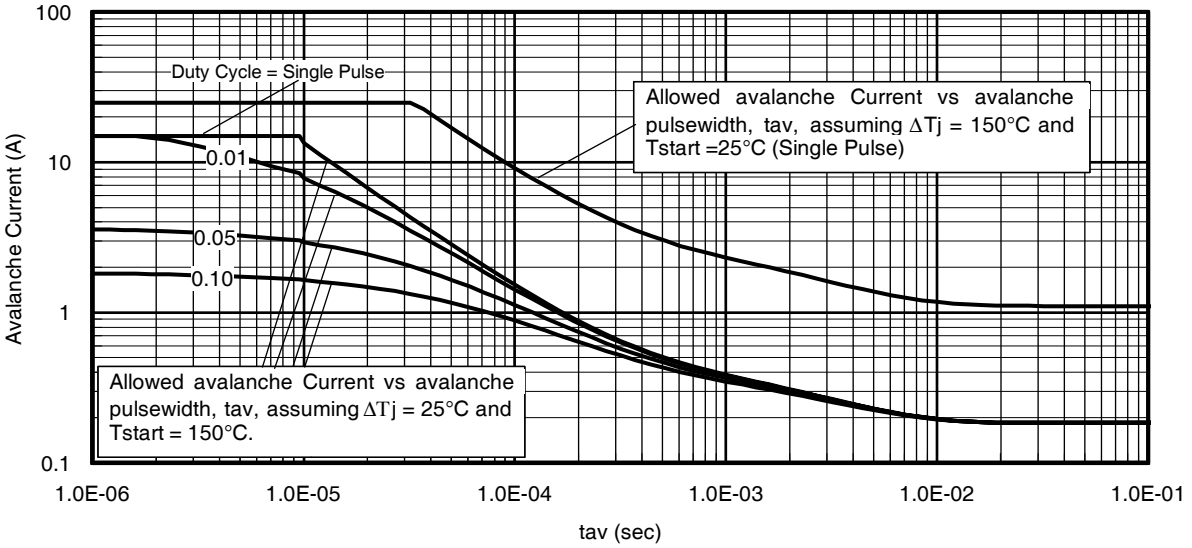

Fig 14. Typical Avalanche Current Vs.Pulsewidth

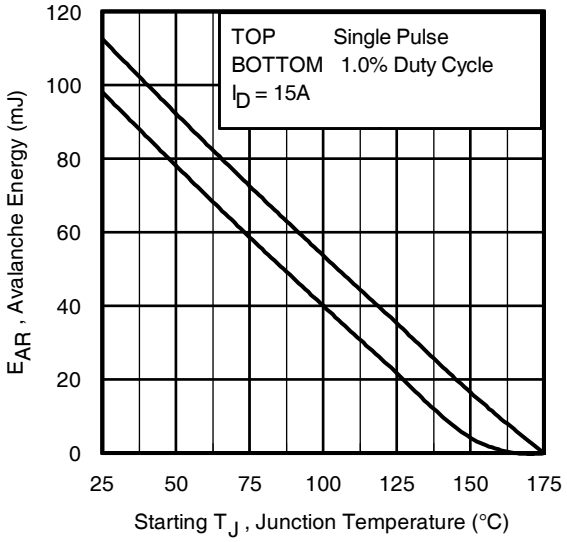

Fig 15. Maximum Avalanche Energy Vs. Temperature

Notes on Repetitive Avalanche Curves , Figures 14, 15:
(For further info, see AN-1005 at www.irf.com)

1. Avalanche failures assumption:
   Purely a thermal phenomenon and failure occurs at a temperature far in excess of T_{jmax}. This is validated for every part type.
2. Safe operation in Avalanche is allowed as long as neither Tjmax nor Iav (max) is exceeded
3. Equation below based on circuit and waveforms shown in Figures 17a, 17b.
4. $P_{D\ (ave)}$ = Average power dissipation per single avalanche pulse.
5. B_V = Rated breakdown voltage (1.3 factor accounts for voltage increase during avalanche).
6. I_{av} = Allowable avalanche current.
7. ΔT = Allowable rise in junction temperature, not to exceed T_{jmax} (assumed as 25°C in Figure 14, 15).
   t_{av} = Average time in avalanche.
   D = Duty cycle in avalanche = $t_{av} \cdot f$
   $Z_{thJC}(D, t_{av})$ = Transient thermal resistance, see figure 11)

$$P_{D\ (ave)} = 1/2\ (1.3 \cdot BV \cdot I_{av}) = \Delta T / Z_{thJC}$$
$$I_{av} = 2\Delta T / [1.3 \cdot BV \cdot Z_{th}]$$
$$E_{AS\ (AR)} = P_{D\ (ave)} \cdot t_{av}$$

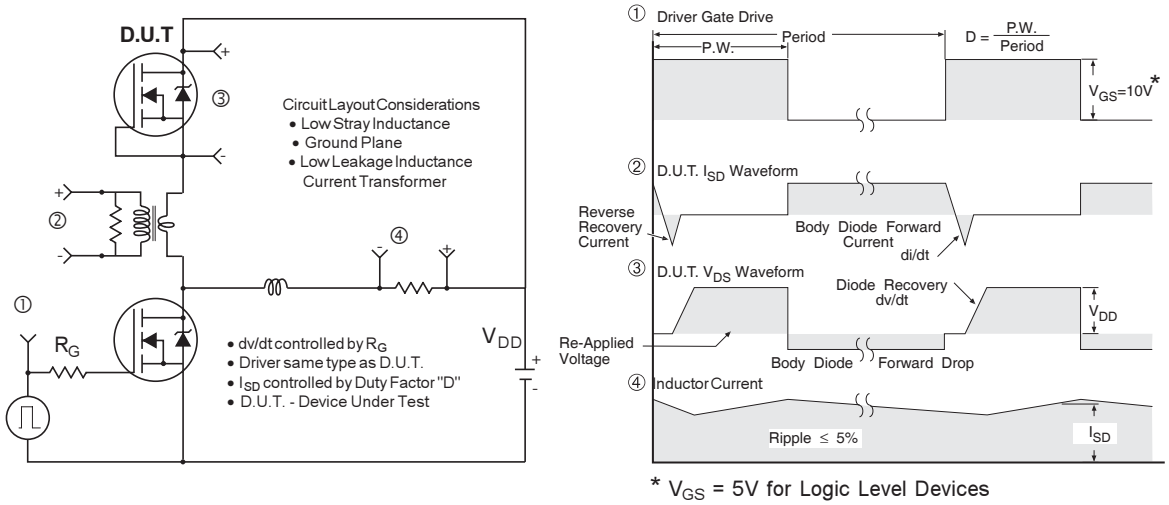

Fig 16. Peak Diode Recovery dv/dt Test Circuit for N-Channel HEXFET® Power MOSFETs

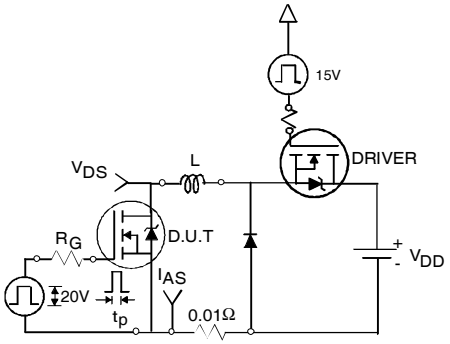

Fig 17a. Unclamped Inductive Test Circuit

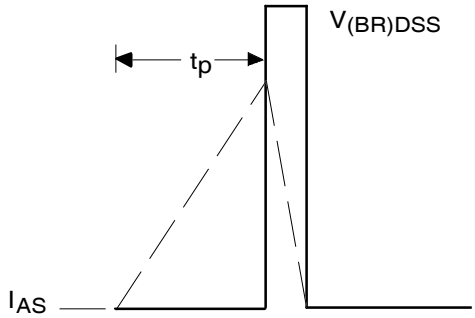

Fig 17b. Unclamped Inductive Waveforms

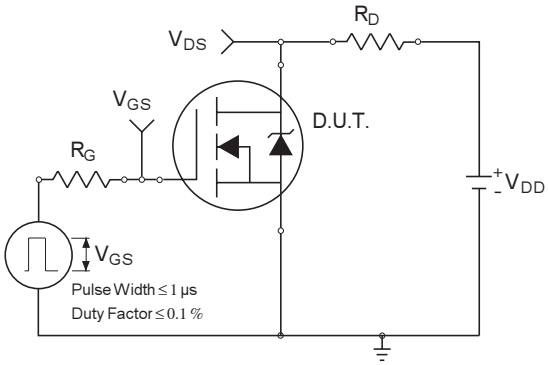

Fig 18a. Switching Time Test Circuit

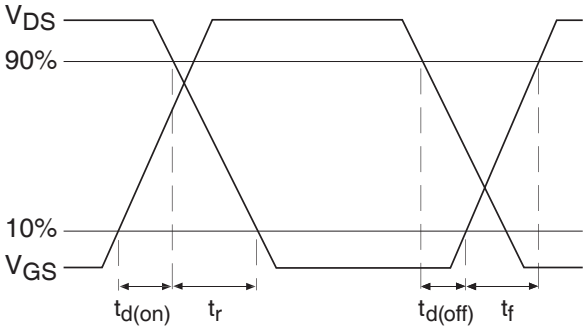

Fig 18b. Switching Time Waveforms

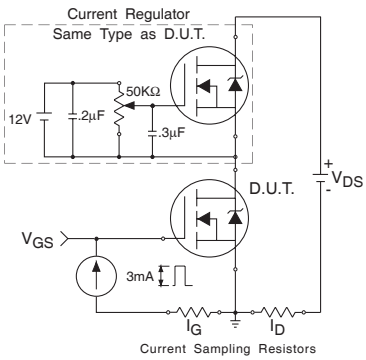

Fig 19a. Gate Charge Test Circuit

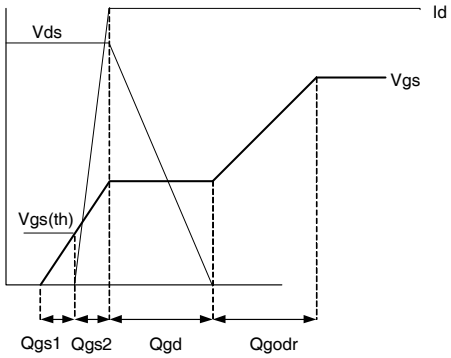

Fig 19b. Gate Charge Waveform

TO-220AB Package Outline

Dimensions are shown in millimeters (inches)

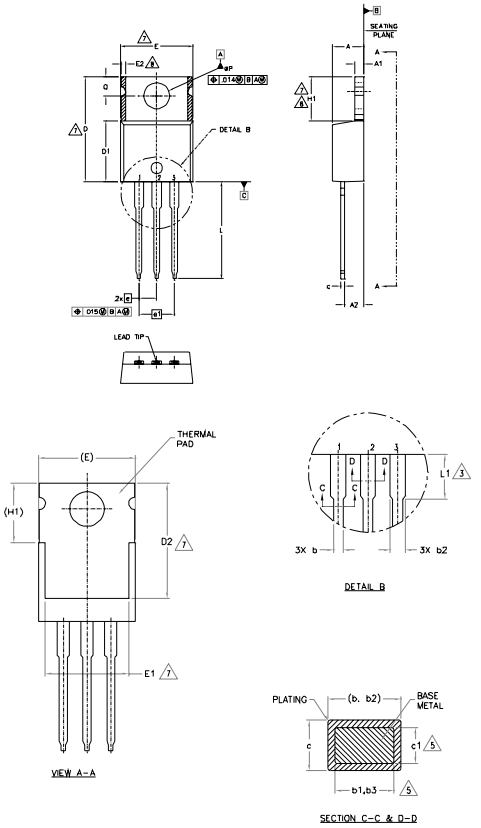

NOTES:

1.– DIMENSIONING AND TOLERANCING AS PER ASME Y14.5 M– 1994.
2.– DIMENSIONS ARE SHOWN IN INCHES [MILLIMETERS].
3.– LEAD DIMENSION AND FINISH UNCONTROLLED IN L1.
4.– DIMENSION D, D1 & E DO NOT INCLUDE MOLD FLASH. MOLD FLASH SHALL NOT EXCEED .005" (0.127) PER SIDE. THESE DIMENSIONS ARE MEASURED AT THE OUTERMOST EXTREMES OF THE PLASTIC BODY.
5.– DIMENSION b1, b3 & c1 APPLY TO BASE METAL ONLY.
6.– CONTROLLING DIMENSION : INCHES.
7.– THERMAL PAD CONTOUR OPTIONAL WITHIN DIMENSIONS E,H1,D2 & E1
8.– DIMENSION E2 X H1 DEFINE A ZONE WHERE STAMPING AND SINGULATION IRREGULARITIES ARE ALLOWED.
9.– OUTLINE CONFORMS TO JEDEC TO-220, EXCEPT A2 (max.) AND D2 (min.) WHERE DIMENSIONS ARE DERIVED FROM THE ACTUAL PACKAGE OUTLINE.

SYMBOL	DIMENSIONS				NOTES
	MILLIMETERS		INCHES		
	MIN.	MAX.	MIN.	MAX.	
A	3.56	4.83	.140	.190	
A1	0.51	1.40	.020	.055	
A2	2.03	2.92	.080	.115	
b	0.38	1.01	.015	.040	
b1	0.38	0.97	.015	.038	5
b2	1.14	1.78	.045	.070	
b3	1.14	1.73	.045	.068	5
c	0.36	0.61	.014	.024	
c1	0.36	0.56	.014	.022	5
D	14.22	16.51	.560	.650	4
D1	8.38	9.02	.330	.355	
D2	11.68	12.88	.460	.507	7
E	9.65	10.67	.380	.420	4,7
E1	6.86	8.89	.270	.350	7
E2	–	0.76	–	.030	8
e	2.54 BSC		.100 BSC		
e1	5.08 BSC		.200 BSC		
H1	5.84	6.86	.230	.270	7,8
L	12.70	14.73	.500	.580	
L1	3.56	4.06	.140	.160	3
øP	3.54	4.08	.139	.161	
Q	2.54	3.42	.100	.135	

LEAD ASSIGNMENTS

HEXFET

1.– GATE
2.– DRAIN
3.– SOURCE

IGBTs, CoPACK

1.– GATE
2.– COLLECTOR
3.– EMITTER

DIODES

1.– ANODE
2.– CATHODE
3.– ANODE

TO-220AB Part Marking Information

EXAMPLE: THIS IS AN IRF1010
LOT CODE 1789
ASSEMBLED ON WW 19, 2000
IN THE ASSEMBLY LINE "C"

Note: "P" in assembly line position indicates "Lead - Free"

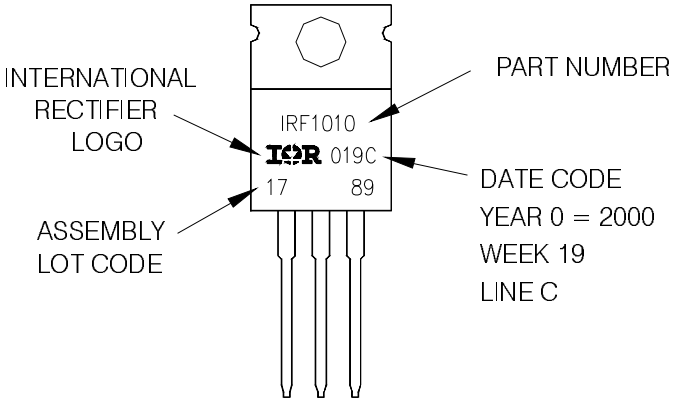

TO-220AB packages are not recommended for Surface Mount Application.

Note: For the most current drawing please refer to IR website at http://www.irf.com/package/

Data and specifications subject to change without notice.
This product has been designed and qualified for the Industrial market.
Qualification Standards can be found on IR's Web site.

International
IOR Rectifier

IR WORLD HEADQUARTERS: 233 Kansas St., El Segundo, California 90245, USA Tel: (310) 252-7105
TAC Fax: (310) 252-7903
Visit us at www.irf.com for sales contact information. 09/2008

AMEYA360
Components Supply Platform

Authorized Distribution Brand :

Website :

Welcome to visit www.ameya360.com

Contact Us :

- ## Address :

401 Building No.5, JiuGe Business Center, Lane 2301, Yishan Rd
Minhang District, Shanghai , China

- ## Sales :

Direct +86 (21) 6401-6692

Email amall@ameya360.com

QQ 800077892

Skype ameyasales1 ameyasales2

- ## Customer Service :

Email service@ameya360.com

- ## Partnership :

Tel +86 (21) 64016692-8333

Email mkt@ameya360.com