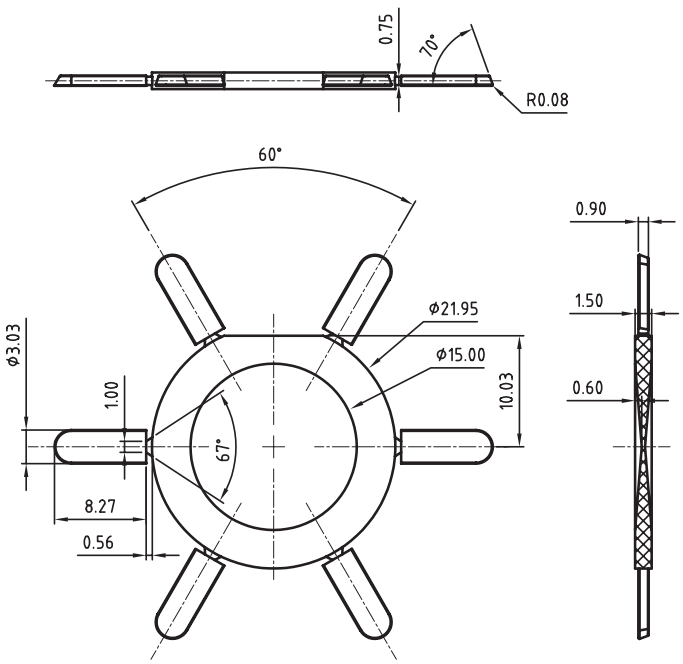

TECHNICAL CHARACTERISTICS

MATERIAL
INSULATOR: PA 66
FLAMABILITY RATING: UL94-V0
COLOR: RED

ENVIRONMENTAL
OPERATING TEMPERATURE: -40 UP TO 105°C
COMPLIANCE: LEAD FREE AND ROHS

MECHANICAL
APPLICABLE PITCH: 5.00 - 5.08 & 7.62MM

PACKAGING: BOX

INSTRUCTION FOR USE

By using a conding key you avoid any risk of mis-pluging

For this you must add/break one part of the:
- 691 399 900 002 in the PCB connector
- 691 399 900 001 in the plug

If keys are on different pin n° (on the plug and PCB connector) mating remains possible (see photo A)
If keys are on the same pin ° (on the plug and PCB connector) mating becomes not possible anymore (see photo B)

PLUG

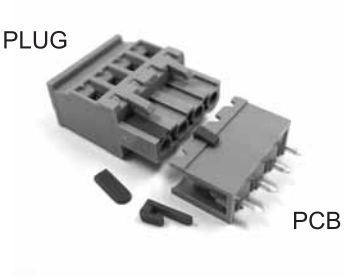

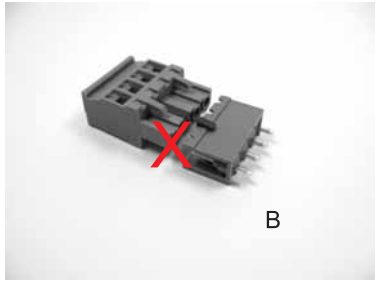

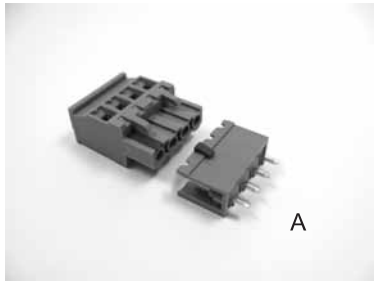

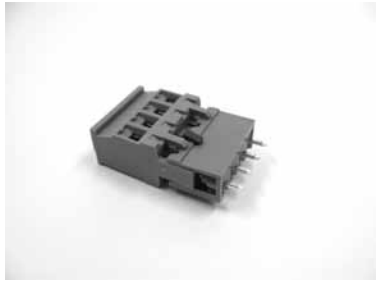

RoHS Compliant

REV	DATE	FILE	BY
G			
F			
E			
D			
C			
B			
A	05-NOV-08	PDF	JP

PROJECTION:

APPROVAL: RJ

GENERAL TOLERANCE
.X = +/- 0.2
.XX = +/- 0.15

UNIT: MM
SCALE:
SHEET: 1/1
DRAW: MARVIN

WÜRTH ELEKTRONIK

DESCRIPTION: CODING KEY FOR 5.00 - 5.08 & 7.62MM PITCH SERIES WR-TBL

WERI PART NO: 691 399 900 001

SIZE
A4

AMEYA360
Components Supply Platform

Authorized Distribution Brand :

Website :

Welcome to visit www.ameya360.com

Contact Us :

- Address :

401 Building No.5, JiuGe Business Center, Lane 2301, Yishan Rd
Minhang District, Shanghai , China

- Sales :

Direct +86 (21) 6401-6692

Email amall@ameya360.com

QQ 800077892

Skype ameyasales1 ameyasales2

- Customer Service :

Email service@ameya360.com

- Partnership :

Tel +86 (21) 64016692-8333

Email mkt@ameya360.com