MICRO SWITCH
FREEPORT, ILLINOIS, U.S.A.
A DIVISION OF HONEYWELL
FED. MFG. CODE 91929

ASSEMBLY— PUSHBUTTON SWITCH

CATALOG LISTING
2PB11-T

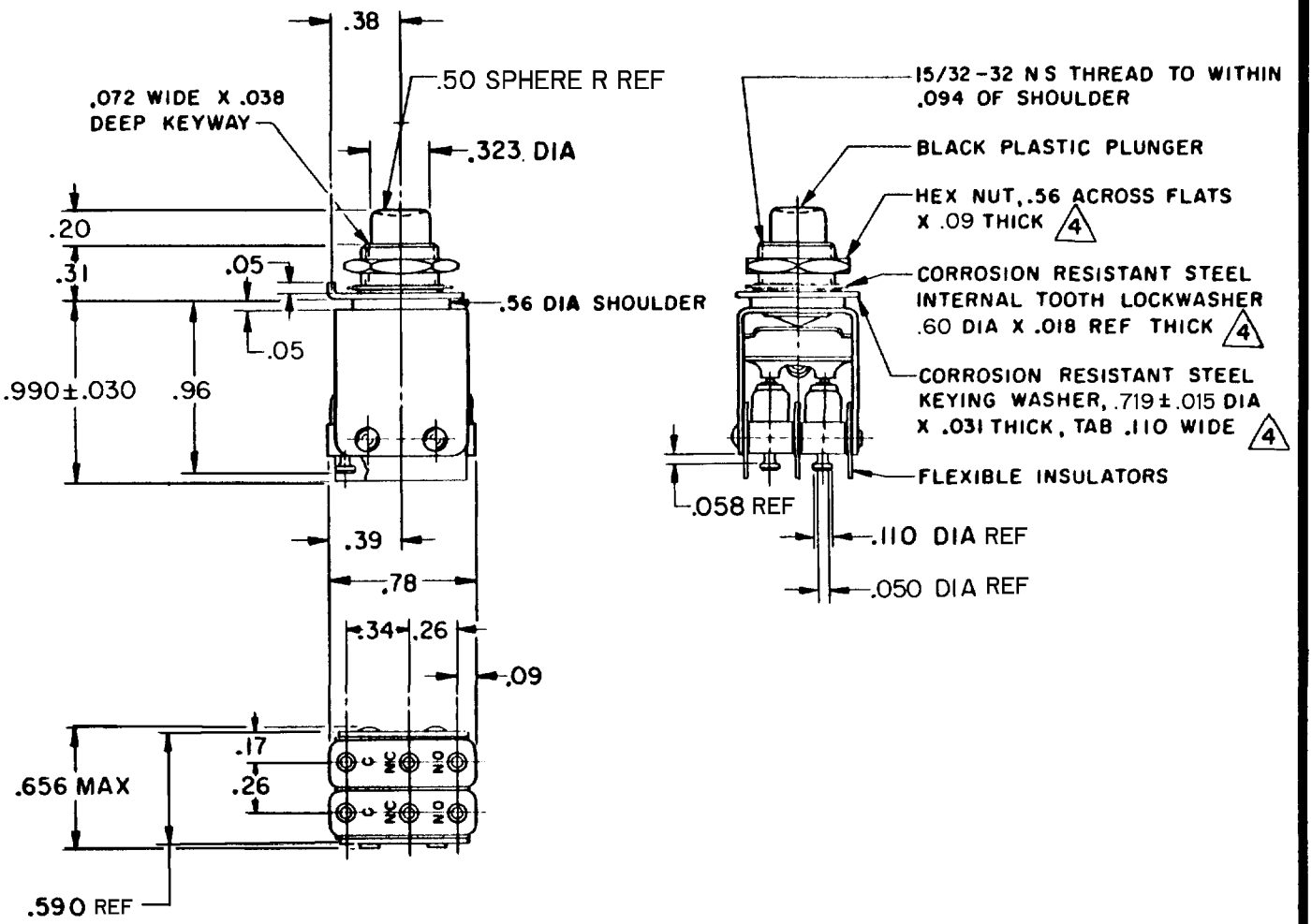

NOTES
1 - UNIT INCLUDES "11SM" TYPE BASIC SWITCH (2)
2 - TERMINALS ARE PLATED FOR SOLDERING
3 - SWITCHES DO NOT NECESSARILY OPERATE SIMULTANEOUSLY
4 MOUNTING HARDWARE FURNISHED UNASSEMBLED

THIS DRAWING COVERS A PROPRIETARY ITEM AND IS THE PROPERTY OF MICRO SWITCH, A DIVISION OF HONEYWELL. THIS DRAWING IS NOT TO BE COPIED OR USED WITHOUT THE APPROVAL OF MICRO SWITCH.

CHARACTERISTICS

OPERATING FORCE ——— 30 OZ APPROX
(B) TOTAL TRAVEL ———— .110 APPROX
PRETRAVEL ———— .040 APPROX
DIFFERENTIAL TRAVEL ——— .050 MAX

ELECTRICAL DATA

CONTACT ARRANGEMENT
S P D T (2)

250 VAC ——— 5 AMP
30 VOLTS DC RATING
INDUCTIVE ——— SEA LEVEL ——— 3 AMP
50,000 FT ——— 2.5 AMP
RESISTIVE ——— SEA LEVEL ——— 5 AMP
50,000 FT ——— 5 AMP
MAXIMUM INRUSH ——— 24 AMP

SCALE FULL
DO NOT SCALE PRINT

UNLESS OTHERWISE NOTED
DIMENSIONS ARE IN INCHES
TOLERANCES ARE:

ONE PLACE	(.0)	±.030
TWO PLACE	(.00)	±.015
THREE PLACE	(.000)	±.005
ANGLES		±

WEIGHT

REPLACES
RELEASE NO.
M 2PB11-T PAGE 1 OF 1
DRAWING NUMBER
ISSUE 12 13

REVISIONS

A	C019800	H B W 18 FEB 65
B	C021022	M B F 22 FEB 66
C	C030742	R E R 2 OCT 72
D	C031782	D B W 16 MAR 73
E	CO-93593	P P F 22 OCT 98
F	CO-94273	G J W 15 APR 99

CHECK J A F 22 OCT 98
CHECK 21 Feb 65
CHECK L S D
DRAWN H B W 18 FEB 65

FORMTEK
FO-50378

AMEYA360
Components Supply Platform

Authorized Distribution Brand :

Website :

Welcome to visit www.ameya360.com

Contact Us :

- **Address :**

  401 Building No.5, JiuGe Business Center, Lane 2301, Yishan Rd
  Minhang District, Shanghai , China

- **Sales :**

  Direct +86 (21) 6401-6692

  Email amall@ameya360.com

  QQ 800077892

  Skype ameyasales1 ameyasales2

- **Customer Service :**

  Email service@ameya360.com

- **Partnership :**

  Tel +86 (21) 64016692-8333

  Email mkt@ameya360.com