DATE	DESCRIPTION	REV.

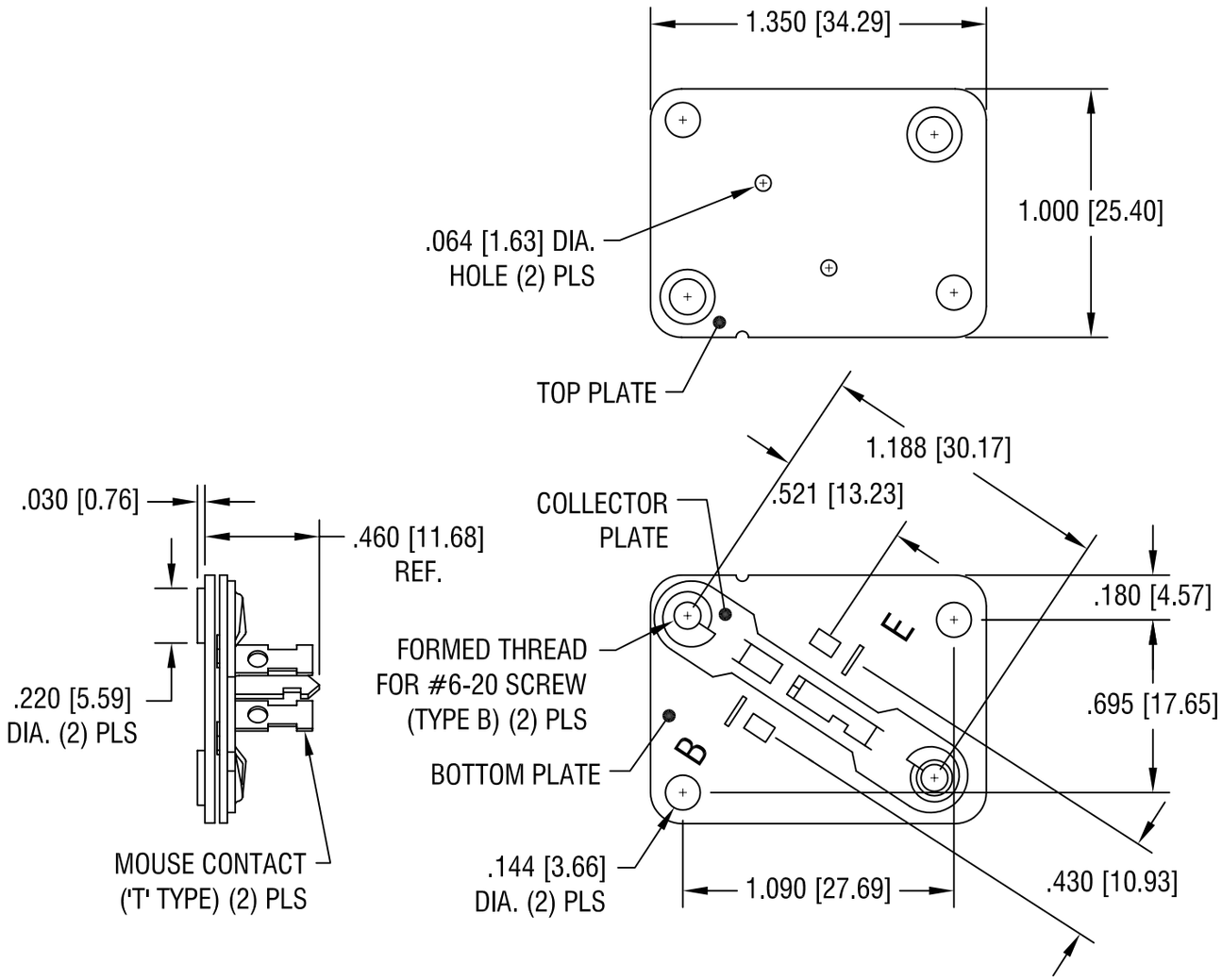

NOTES:

TOP PLATE: COLOR - BLACK
MAT'L - NYLON 6/6 UL 94V-2

BOTTOM PLATE:
MAT'L - .032 [0.81] TH'K PHENOLIC

COLLECTOR PLATE:
MAT'L - .032 [0.81] TH'K STEEL
FINISH - TIN PLATE

MOUSE CONTACT ('T' TYPE):
MAT'L - .013 [0.33] TH'K BRASS
FINISH - TIN PLATE

THIS DOCUMENT IS THE PROPERTY OF KEYSTONE ELECTRONICS CORP. AND SHALL NOT BE REPRODUCED, DISTRIBUTED OR USED AS A BASIS FOR MANUFACTURE WITHOUT PRIOR WRITTEN PERMISSION FROM KEYSTONE ELECTRONICS CORP.

KEYSTONE ELECTRONICS CORP.
ASTORIA, N.Y. 11105-2017

PART NAME	TO-3 POWER TRANSISTOR SOCKET		
MATERIAL	AS NOTED		
FINISH	AS NOTED	DRN BY BOONE	DATE 3.14.07
		APP'D LN	SCALE 1.5X
TOLERANCES INCH [MM] DECIMAL ± .005 [± 0.15] ANGULAR ± 1° UNLESS OTHERWISE SPECIFIED	CODE C	DWG NO. 4607	

AMEYA360
Components Supply Platform

Authorized Distribution Brand :

Website :

Welcome to visit www.ameya360.com

Contact Us :

- ## Address :

401 Building No.5, JiuGe Business Center, Lane 2301, Yishan Rd
Minhang District, Shanghai , China

- ## Sales :

Direct +86 (21) 6401-6692

Email amall@ameya360.com

QQ 800077892

Skype ameyasales1 ameyasales2

- ## Customer Service :

Email service@ameya360.com

- ## Partnership :

Tel +86 (21) 64016692-8333

Email mkt@ameya360.com