LOW POWER, 1.8/2.5/3.3-V INPUT, 3.3-V CMOS OUTPUT, SINGLE SCHMITT-TRIGGER BUFFER GATE

Check for Samples: SN74AUP1T17

FEATURES

- **Single-Supply Voltage Translator**
- **Output Level Up to Supply V_{CC} CMOS Level**
  - **1.8 V to 3.3 V (at V_{CC} = 3.3 V)**
  - **2.5 V to 3.3 V (at V_{CC} = 3.3 V)**
  - **1.8 V to 2.5 V (at V_{CC} = 2.5 V)**
  - **3.3 V to 2.5 V (at V_{CC} = 2.5 V**
- **Schmitt-Trigger Inputs Reject Input Noise and Provide Better Output Signal Integrity**
- **I_{off} Supports Partial Power Down (V_{CC} = 0 V)**
- **Very Low Static Power Consumption: 0.1 µA**
- **Very Low Dynamic Power Consumption: 0.9 µA**
- **Latch-Up Performance Exceeds 100 mA Per JESD 78, Class II**
- **Pb-Free Packages Available: SC-70 (DCK) 2 x 2.1 x 0.65 mm (Height 1.1 mm)**
- **More Gate Options Available at www.ti.com/littlelogic**
- **ESD Performance Tested Per JESD 22**
  - **2000-V Human-Body Model (A114-B, Class II)**
  - **1000-V Charged-Device Model (C101)**

DCK PACKAGE (TOP VIEW)

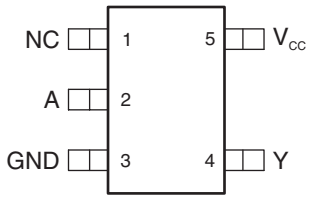

DESCRIPTION/ORDERING INFORMATION

The SN74AUP1T17 performs the Boolean function Y = A with designation for logic-level translation applications with output referenced to supply V_{CC}.

AUP technology is the industry's lowest-power logic technology designed for use in extending battery-life in operating. All input levels that accept 1.8-V LVCMOS signals, while operating from either a single 3.3-V or 2.5-V V_{CC} supply. This product also maintains excellent signal integrity (see Figure 1 and Figure 2).

The wide V_{CC} range of 2.3 V to 3.6 V allows the possibility of switching output level to connect to external controllers or processors.

Schmitt-trigger inputs (ΔV_T = 210 mV between positive and negative input transitions) offer improved noise immunity during switching transitions, which is especially useful on analog mixed-mode designs. Schmitt-trigger inputs reject input noise, ensure integrity of output signals, and allow for slow input signal transition.

I_{off} is a feature that allows for powered-down conditions (V_{CC} = 0 V) and is important in portable and mobile applications. When V_{CC} = 0 V, signals in the range from 0 V to 3.6 V can be applied to the inputs and outputs of the device. No damage occurs to the device under these conditions.

The SN74AUP1T17 is designed with optimized current-drive capability of 4 mA to reduce line reflections, overshoot, and undershoot caused by high-drive outputs.

Please be aware that an important notice concerning availability, standard warranty, and use in critical applications of Texas Instruments semiconductor products and disclaimers thereto appears at the end of this data sheet.

PRODUCTION DATA information is current as of publication date. Products conform to specifications per the terms of the Texas Instruments standard warranty. Production processing does not necessarily include testing of all parameters.

Copyright © 2010, Texas Instruments Incorporated

ORDERING INFORMATION(1)

T_A	PACKAGE(2)		ORDERABLE PART NUMBER	TOP-SIDE MARKING(3)
–40°C to 85°C	SOT (SC-70) – DCK	Reel of 3000	SN74AUP1T17DCKR	67_
		Reel of 250	SN74AUP1T17DCKT	

(1) For the most current package and ordering information, see the Package Option Addendum at the end of this document, or see the TI web site at www.ti.com.
(2) Package drawings, thermal data, and symbolization are available at www.ti.com/packaging.
(3) The actual top-side marking has one additional character that designates the wafer fab/assembly site.

FUNCTION TABLE

INPUTS (Lower Level Input)	OUTPUT (V_{CC} CMOS)
A	**Y**
H	H
L	L

Supply V_{CC} = 2.3 V to 2.7 V (2.5 V)

INPUTS V_{T+} max = V_{IH} min V_{T-} min = V_{IL} max		OUTPUT CMOS
A	**B**	**Y**
V_{IH} = 1.1 V V_{IL} = 0.35 V		V_{OH} = 1.85 V V_{OL} = 0.45 V

Supply V_{CC} = 3 V to 3.6 V (3.3 V)

INPUTS V_{T+} max = V_{IH} min V_{T-} min = V_{IL} max		OUTPUT CMOS
A	**B**	**Y**
V_{IH} = 1.19 V V_{IL} = 0.5 V		V_{OH} = 2.55 V V_{OL} = 0.45 V

LOGIC DIAGRAM (SCHMITT-TRIGGER BUFFER GATE)

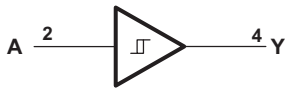

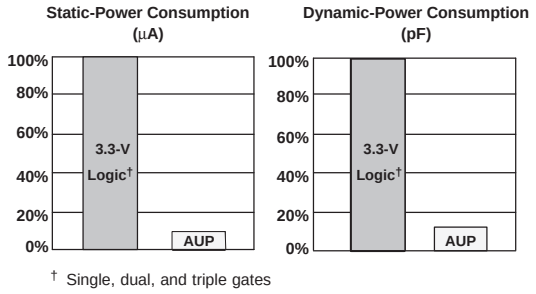

Figure 1. AUP – The Lowest-Power Family

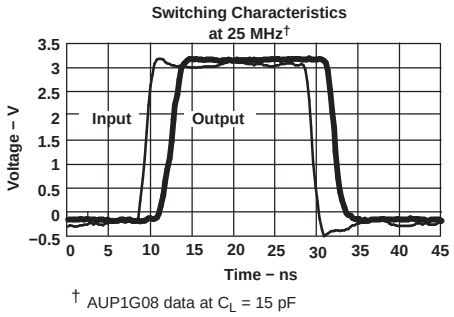

Figure 2. Excellent Signal Integrity

Copyright © 2010, Texas Instruments Incorporated

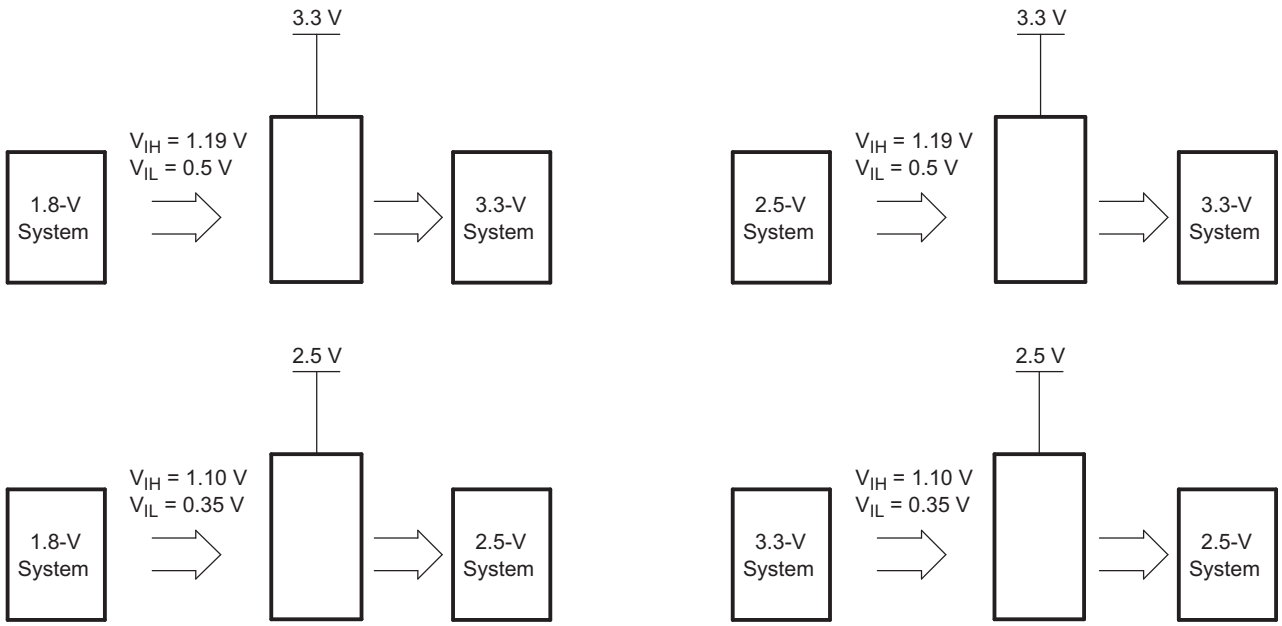

Figure 3. Typical Design Examples

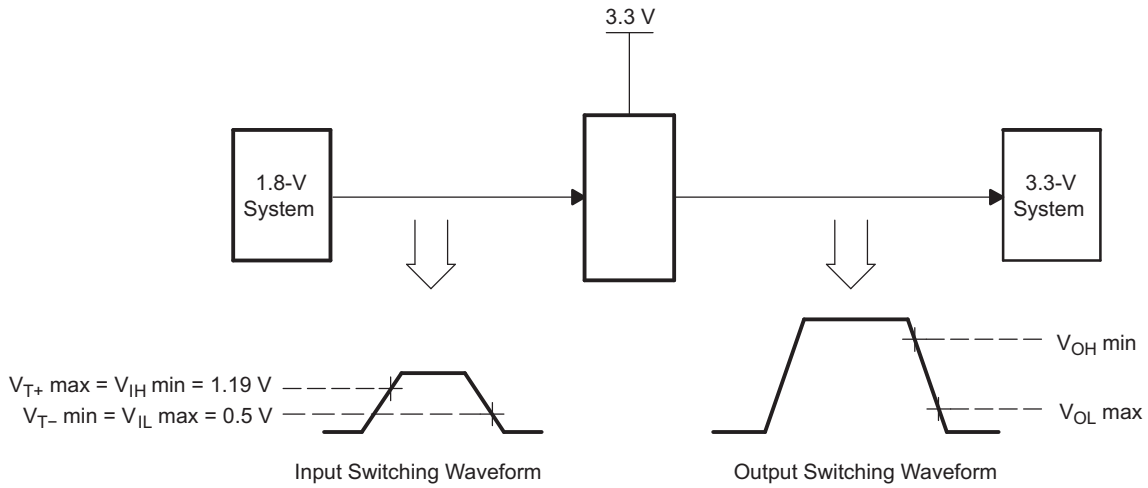

Figure 4. Switching Thresholds for 1.8-V to 3.3-V Translation

ABSOLUTE MAXIMUM RATINGS[1]

over operating free-air temperature range (unless otherwise noted)

			MIN	MAX	UNIT
V_{CC}	Supply voltage range		–0.5	4.6	V
V_I	Input voltage range[2]		–0.5	4.6	V
V_O	Voltage range applied to any output in the high-impedance or power-off state[2]		–0.5	4.6	V
V_O	Output voltage range in the high or low state[2]		–0.5	V_{CC} + 0.5	V
I_{IK}	Input clamp current	$V_I < 0$		–50	mA
I_{OK}	Output clamp current	$V_O < 0$		–50	mA
I_O	Continuous output current			±20	mA
	Continuous current through V_{CC} or GND			±50	mA
θ_{JA}	Package thermal impedance[3]	DCK package		259	°C/W
T_{stg}	Storage temperature range		–65	150	°C

(1) Stresses beyond those listed under "absolute maximum ratings" may cause permanent damage to the device. These are stress ratings only, and functional operation of the device at these or any other conditions beyond those indicated under "recommended operating conditions" is not implied. Exposure to absolute-maximum-rated conditions for extended periods may affect device reliability.
(2) The input negative-voltage and output voltage ratings may be exceeded if the input and output current ratings are observed.
(3) The package thermal impedance is calculated in accordance with JESD 51-7.

RECOMMENDED OPERATING CONDITIONS[1]

			MIN	MAX	UNIT
V_{CC}	Supply voltage		2.3	3.6	V
V_I	Input voltage		0	3.6	V
V_O	Output voltage		0	V_{CC}	V
I_{OH}	High-level output current	V_{CC} = 2.3 V		–3.1	mA
		V_{CC} = 3 V		–4	
I_{OL}	Low-level output current	V_{CC} = 2.3 V		3.1	mA
		V_{CC} = 3 V		4	
T_A	Operating free-air temperature		–40	85	°C

(1) All unused inputs of the device must be held at V_{CC} or GND to ensure proper device operation. See the TI application report *Implications of Slow or Floating CMOS Inputs*, literature number SCBA004.

Copyright © 2010, Texas Instruments Incorporated

ELECTRICAL CHARACTERISTICS

over recommended operating free-air temperature range (unless otherwise noted)

PARAMETER	TEST CONDITIONS	V_{CC}	T_A = 25°C			T_A = –40°C to 85°C		UNIT
			MIN	TYP	MAX	MIN	MAX	
V_{T+} Positive-going input threshold voltage		2.3 V to 2.7 V	0.6		1.1	0.6	1.1	V
		3 V to 3.6 V	0.75		1.16	0.75	1.19	
V_{T-} Negative-going input threshold voltage		2.3 V to 2.7 V	0.35		0.6	0.35	0.6	V
		3 V to 3.6 V	0.5		0.85	0.5	0.85	
ΔV_T Hysteresis ($V_{T+} – V_{T-}$)		2.3 V to 2.7 V	0.23		0.6	0.1	0.6	V
		3 V to 3.6 V	0.25		0.56	0.15	0.56	
V_{OH}	I_{OH} = –20 μA	2.3 V to 3.6 V	V_{CC} – 0.1			V_{CC} – 0.1		V
	I_{OH} = –2.3 mA	2.3 V	2.05			1.97		
	I_{OH} = –3.1 mA		1.9			1.85		
	I_{OH} = –2.7 mA	3 V	2.72			2.67		
	I_{OH} = –4 mA		2.6			2.55		
V_{OL}	I_{OL} = 20 μA	2.3 V to 3.6 V			0.1		0.1	V
	I_{OL} = 2.3 mA	2.3 V			0.31		0.33	
	I_{OL} = 3.1 mA				0.44		0.45	
	I_{OL} = 2.7 mA	3 V			0.31		0.33	
	I_{OL} = 4 mA				0.44		0.45	
I_I All inputs	V_I = 3.6 V or GND	0 V to 3.6 V			0.1		0.5	μA
I_{off}	V_I or V_O = 0 V to 3.6 V	0 V			0.1		0.5	μA
ΔI_{off}	V_I or V_O = 3.6 V	0 V to 0.2 V			0.2		0.5	μA
I_{CC}	V_I = 3.6 V or GND, I_O = 0	2.3 V to 3.6 V			0.5		0.9	μA
ΔI_{CC}	One input at 0.3 V or 1.1 V, Other inputs at 0 or V_{CC}, I_O = 0	2.3 V to 2.7 V					4	μA
	One input at 0.45 V or 1.2 V, Other inputs at 0 or V_{CC}, I_O = 0	3 V to 3.6 V					12	
C_i	V_I = V_{CC} or GND	3.3 V		1.5				pF
C_o	V_O = V_{CC} or GND	3.3 V		3				pF

SWITCHING CHARACTERISTICS

over recommended operating free-air temperature range, V_{CC} = 2.5 V ± 0.2 V, V_I = 1.8 V ± 0.15 V (unless otherwise noted) (see Figure 5)

PARAMETER	FROM (INPUT)	TO (OUTPUT)	C_L	T_A = 25°C			T_A = –40°C to 85°C		UNIT
				MIN	TYP	MAX	MIN	MAX	
t_{pd}	A	Y	5 pF	1.8	2.3	2.9	0.5	6.8	ns
			10 pF	2.3	2.8	3.4	1	7.9	
			15 pF	2.6	3.1	3.8	1	8.7	
			30 pF	3.8	4.4	5.1	1.5	10.8	

Copyright © 2010, Texas Instruments Incorporated

SWITCHING CHARACTERISTICS

over recommended operating free-air temperature range, V_{CC} = 2.5 V ± 0.2 V, V_I = 2.5 V ± 0.2 V (unless otherwise noted) (see Figure 5)

PARAMETER	FROM (INPUT)	TO (OUTPUT)	C_L	T_A = 25°C			T_A = –40°C to 85°C		UNIT
				MIN	TYP	MAX	MIN	MAX	
t_{pd}	A	Y	5 pF	1.8	2.3	3.1	0.5	6	ns
			10 pF	2.2	2.8	3.5	1	7.1	
			15 pF	2.6	3.2	5.2	1	7.9	
			30 pF	3.7	4.4	5.2	1.5	10	

SWITCHING CHARACTERISTICS

over recommended operating free-air temperature range, V_{CC} = 2.5 V ± 0.2 V, V_I = 3.3 V ± 0.3 V (unless otherwise noted) (see Figure 5)

PARAMETER	FROM (INPUT)	TO (OUTPUT)	C_L	T_A = 25°C			T_A = –40°C to 85°C		UNIT
				MIN	TYP	MAX	MIN	MAX	
t_{pd}	A	Y	5 pF	2	2.7	3.5	0.5	5.5	ns
			10 pF	2.4	3.1	3.9	1	6.5	
			15 pF	2.8	3.5	4.3	1	7.4	
			30 pF	4	4.7	5.5	1.5	9.5	

SWITCHING CHARACTERISTICS

over recommended operating free-air temperature range, V_{CC} = 3.3 V ± 0.3 V, V_I = 1.8 V ± 0.15 V (unless otherwise noted) (see Figure 5)

PARAMETER	FROM (INPUT)	TO (OUTPUT)	C_L	T_A = 25°C			T_A = –40°C to 85°C		UNIT
				MIN	TYP	MAX	MIN	MAX	
t_{pd}	A	Y	5 pF	1.6	2	2.5	0.5	8	ns
			10 pF	2	2.4	2.9	1	8.5	
			15 pF	2.3	2.8	3.3	1	9.1	
			30 pF	3.4	3.9	4.4	1.5	9.8	

SWITCHING CHARACTERISTICS

over recommended operating free-air temperature range, V_{CC} = 3.3 V ± 0.3 V, V_I = 2.5 V ± 0.2 V (unless otherwise noted) (see Figure 5)

PARAMETER	FROM (INPUT)	TO (OUTPUT)	C_L	T_A = 25°C			T_A = –40°C to 85°C		UNIT
				MIN	TYP	MAX	MIN	MAX	
t_{pd}	A	Y	5 pF	1.6	1.9	2.4	0.5	5.3	ns
			10 pF	2	2.3	2.7	1	6.1	
			15 pF	2.3	2.7	3.1	1	6.8	
			30 pF	3.4	3.8	4.2	1.5	8.5	

Copyright © 2010, Texas Instruments Incorporated

SWITCHING CHARACTERISTICS

over recommended operating free-air temperature range, V_{CC} = 3.3 V ± 0.3 V, V_I = 3.3 V ± 0.3 V (unless otherwise noted) (see Figure 5)

PARAMETER	FROM (INPUT)	TO (OUTPUT)	C_L	T_A = 25°C			T_A = –40°C to 85°C		UNIT
				MIN	TYP	MAX	MIN	MAX	
t_{pd}	A	Y	5 pF	1.6	2.1	2.7	0.5	4.7	ns
			10 pF	2	2.4	3	1	5.7	
			15 pF	2.3	2.7	3.3	1	6.2	
			30 pF	3.4	3.8	4.4	1.5	7.8	

OPERATING CHARACTERISTICS

T_A = 25°C

PARAMETER		TEST CONDITIONS	V_{CC} = 2.5 V	V_{CC} = 3.3 V	UNIT
			TYP	TYP	
C_{pd}	Power dissipation capacitance	f = 10 MHz	4	5	pF

PARAMETER MEASUREMENT INFORMATION

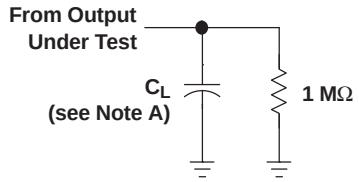

LOAD CIRCUIT

	V_{CC} = 2.5 V ± 0.2 V	V_{CC} = 3.3 V ± 0.3 V
C_L	5, 10, 15, 30 pF	5, 10, 15, 30 pF
V_{MI}	$V_I/2$	$V_I/2$
V_{MO}	$V_{CC}/2$	$V_{CC}/2$

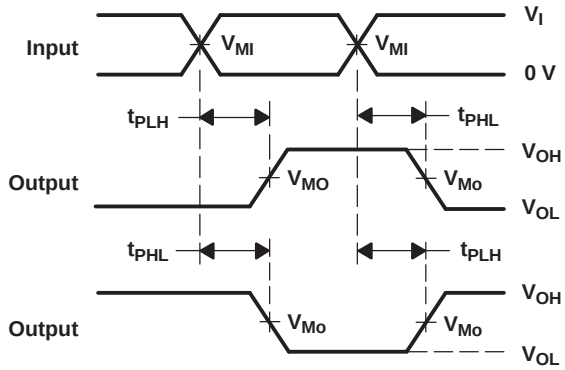

VOLTAGE WAVEFORMS
PROPAGATION DELAY TIMES
INVERTING AND NONINVERTING OUTPUTS

NOTES: A. C_L includes probe and jig capacitance.
B. All input pulses are supplied by generators having the following characteristics: PRR ≤ 10 MHz, Z_O = 50 Ω, slew rate ≥ 1 V/ns.
C. The outputs are measured one at a time, with one transition per measurement.
D. t_{PLH} and t_{PHL} are the same as t_{pd}.

Figure 5. Load Circuit and Voltage Waveforms

Copyright © 2010, Texas Instruments Incorporated

PACKAGING INFORMATION

Orderable Device	Status (1)	Package Type	Package Drawing	Pins	Package Qty	Eco Plan (2)	Lead/Ball Finish	MSL Peak Temp (3)	Op Temp (°C)	Top-Side Markings (4)	Samples
SN74AUP1T17DCKR	ACTIVE	SC70	DCK	5	3000	Green (RoHS & no Sb/Br)	CU NIPDAU	Level-1-260C-UNLIM	-40 to 85	(675 ~ 67F)	Samples

(1) The marketing status values are defined as follows:
ACTIVE: Product device recommended for new designs.
LIFEBUY: TI has announced that the device will be discontinued, and a lifetime-buy period is in effect.
NRND: Not recommended for new designs. Device is in production to support existing customers, but TI does not recommend using this part in a new design.
PREVIEW: Device has been announced but is not in production. Samples may or may not be available.
OBSOLETE: TI has discontinued the production of the device.

(2) Eco Plan - The planned eco-friendly classification: Pb-Free (RoHS), Pb-Free (RoHS Exempt), or Green (RoHS & no Sb/Br) - please check http://www.ti.com/productcontent for the latest availability information and additional product content details.
TBD: The Pb-Free/Green conversion plan has not been defined.
Pb-Free (RoHS): TI's terms "Lead-Free" or "Pb-Free" mean semiconductor products that are compatible with the current RoHS requirements for all 6 substances, including the requirement that lead not exceed 0.1% by weight in homogeneous materials. Where designed to be soldered at high temperatures, TI Pb-Free products are suitable for use in specified lead-free processes.
Pb-Free (RoHS Exempt): This component has a RoHS exemption for either 1) lead-based flip-chip solder bumps used between the die and package, or 2) lead-based die adhesive used between the die and leadframe. The component is otherwise considered Pb-Free (RoHS compatible) as defined above.
Green (RoHS & no Sb/Br): TI defines "Green" to mean Pb-Free (RoHS compatible), and free of Bromine (Br) and Antimony (Sb) based flame retardants (Br or Sb do not exceed 0.1% by weight in homogeneous material)

(3) MSL, Peak Temp. -- The Moisture Sensitivity Level rating according to the JEDEC industry standard classifications, and peak solder temperature.

(4) Multiple Top-Side Markings will be inside parentheses. Only one Top-Side Marking contained in parentheses and separated by a "~" will appear on a device. If a line is indented then it is a continuation of the previous line and the two combined represent the entire Top-Side Marking for that device.

Important Information and Disclaimer: The information provided on this page represents TI's knowledge and belief as of the date that it is provided. TI bases its knowledge and belief on information provided by third parties, and makes no representation or warranty as to the accuracy of such information. Efforts are underway to better integrate information from third parties. TI has taken and continues to take reasonable steps to provide representative and accurate information but may not have conducted destructive testing or chemical analysis on incoming materials and chemicals. TI and TI suppliers consider certain information to be proprietary, and thus CAS numbers and other limited information may not be available for release.

In no event shall TI's liability arising out of such information exceed the total purchase price of the TI part(s) at issue in this document sold by TI to Customer on an annual basis.

TAPE AND REEL INFORMATION

REEL DIMENSIONS

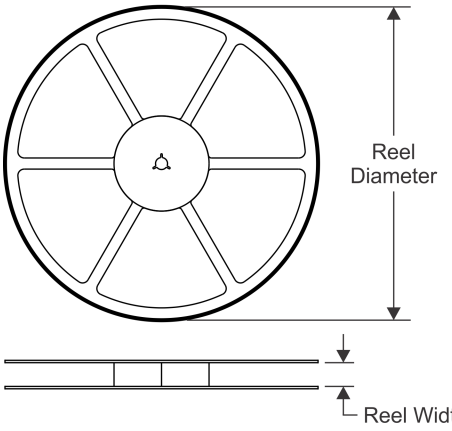

TAPE DIMENSIONS

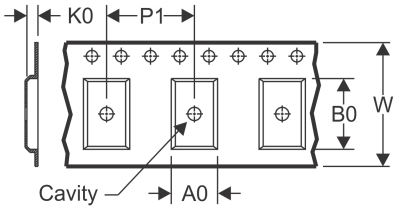

A0	Dimension designed to accommodate the component width
B0	Dimension designed to accommodate the component length
K0	Dimension designed to accommodate the component thickness
W	Overall width of the carrier tape
P1	Pitch between successive cavity centers

QUADRANT ASSIGNMENTS FOR PIN 1 ORIENTATION IN TAPE

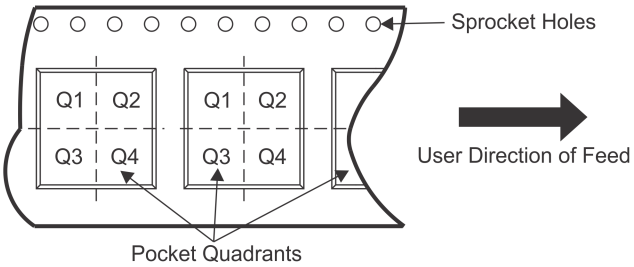

*All dimensions are nominal

Device	Package Type	Package Drawing	Pins	SPQ	Reel Diameter (mm)	Reel Width W1 (mm)	A0 (mm)	B0 (mm)	K0 (mm)	P1 (mm)	W (mm)	Pin1 Quadrant
SN74AUP1T17DCKR	SC70	DCK	5	3000	178.0	9.0	2.4	2.5	1.2	4.0	8.0	Q3

TAPE AND REEL BOX DIMENSIONS

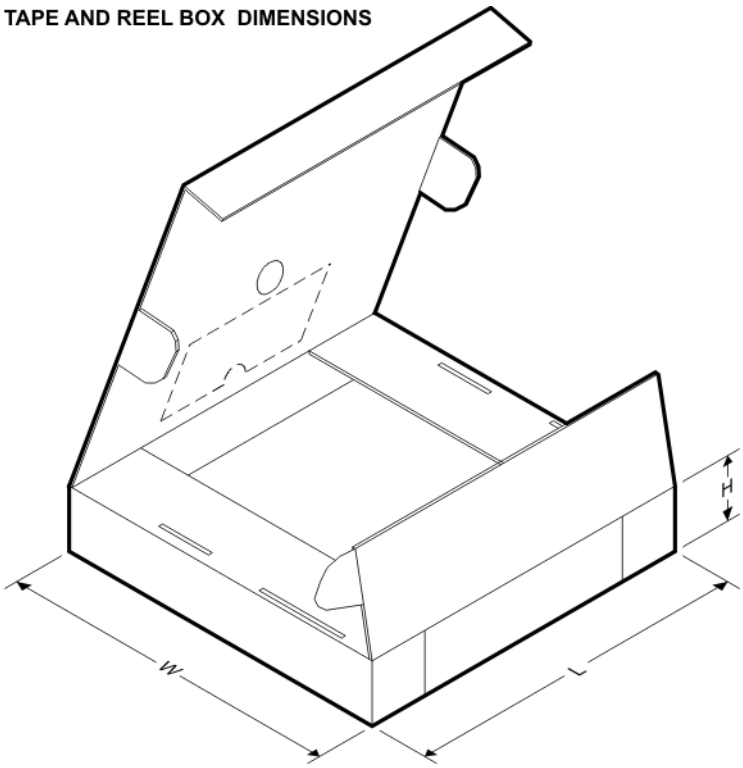

*All dimensions are nominal

Device	Package Type	Package Drawing	Pins	SPQ	Length (mm)	Width (mm)	Height (mm)
SN74AUP1T17DCKR	SC70	DCK	5	3000	180.0	180.0	18.0

DCK (R–PDSO–G5) PLASTIC SMALL–OUTLINE PACKAGE

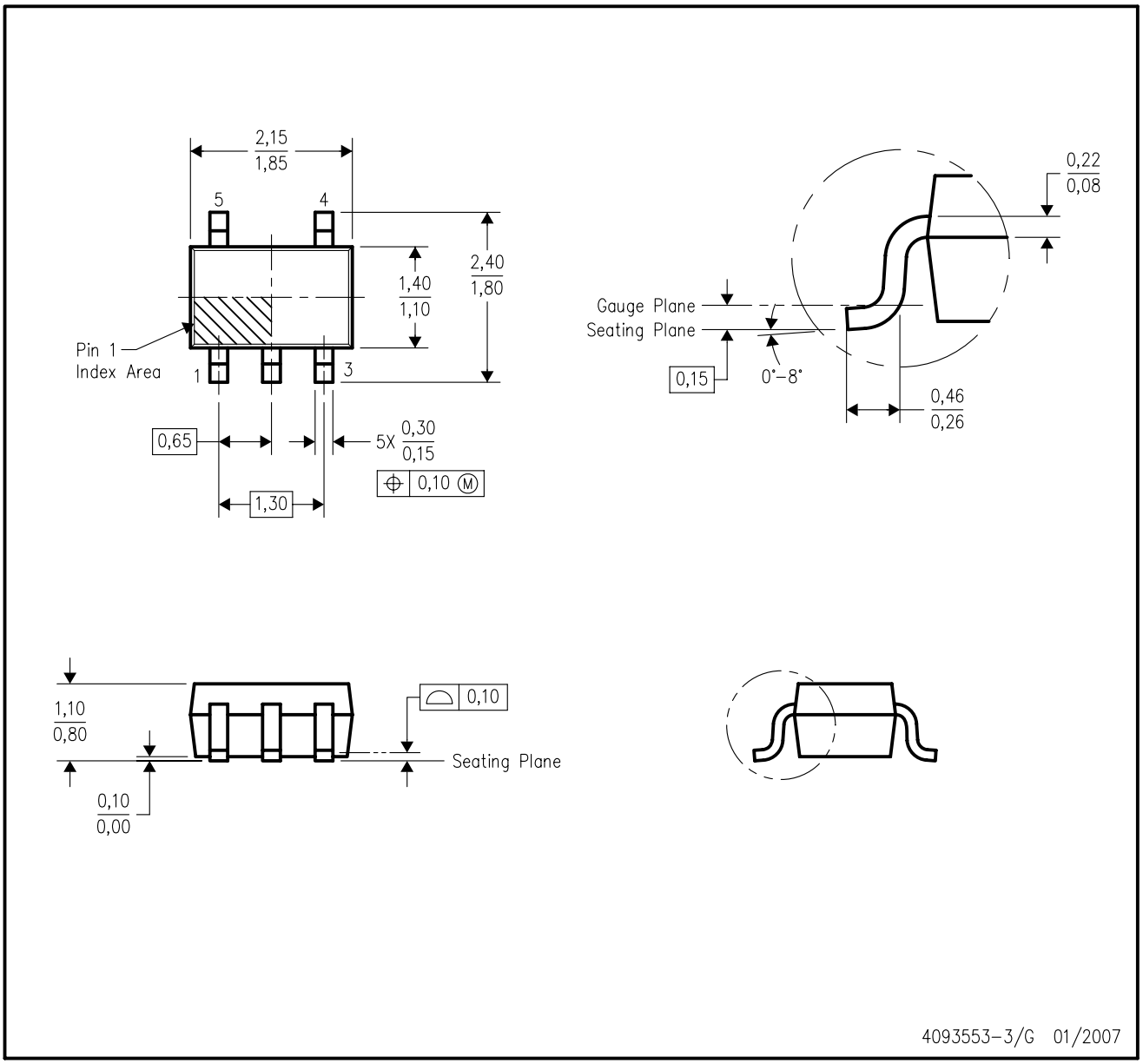

NOTES:
A. All linear dimensions are in millimeters.
B. This drawing is subject to change without notice.
C. Body dimensions do not include mold flash or protrusion. Mold flash and protrusion shall not exceed 0.15 per side.
D. Falls within JEDEC MO–203 variation AA.

DCK (R-PDSO-G5) PLASTIC SMALL OUTLINE

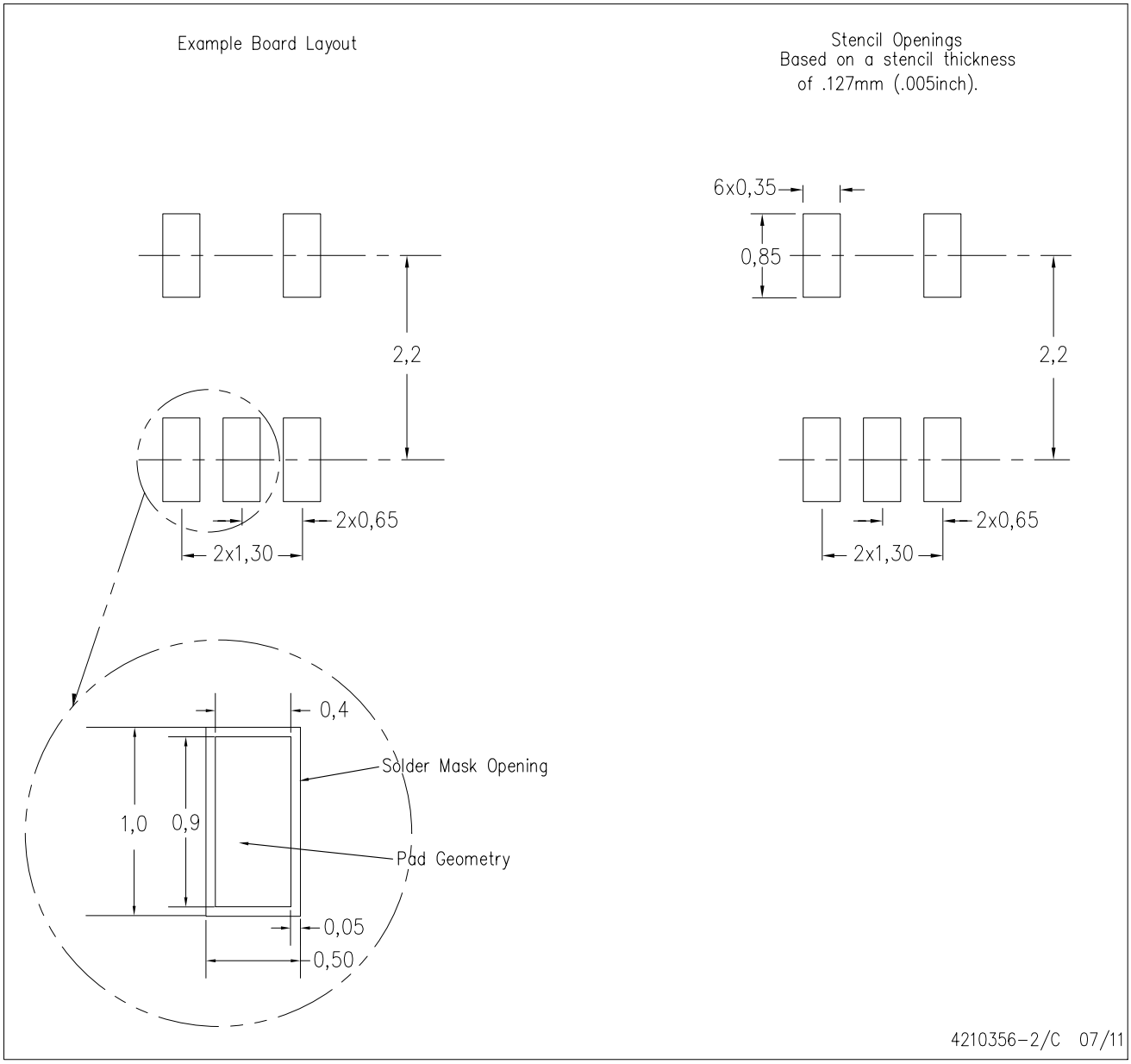

NOTES:
A. All linear dimensions are in millimeters.
B. This drawing is subject to change without notice.
C. Customers should place a note on the circuit board fabrication drawing not to alter the center solder mask defined pad.
D. Publication IPC-7351 is recommended for alternate designs.
E. Laser cutting apertures with trapezoidal walls and also rounding corners will offer better paste release. Customers should contact their board assembly site for stencil design recommendations. Example stencil design based on a 50% volumetric metal load solder paste. Refer to IPC-7525 for other stencil recommendations.

IMPORTANT NOTICE

Texas Instruments Incorporated and its subsidiaries (TI) reserve the right to make corrections, enhancements, improvements and other changes to its semiconductor products and services per JESD46, latest issue, and to discontinue any product or service per JESD48, latest issue. Buyers should obtain the latest relevant information before placing orders and should verify that such information is current and complete. All semiconductor products (also referred to herein as “components”) are sold subject to TI’s terms and conditions of sale supplied at the time of order acknowledgment.

TI warrants performance of its components to the specifications applicable at the time of sale, in accordance with the warranty in TI’s terms and conditions of sale of semiconductor products. Testing and other quality control techniques are used to the extent TI deems necessary to support this warranty. Except where mandated by applicable law, testing of all parameters of each component is not necessarily performed.

TI assumes no liability for applications assistance or the design of Buyers’ products. Buyers are responsible for their products and applications using TI components. To minimize the risks associated with Buyers’ products and applications, Buyers should provide adequate design and operating safeguards.

TI does not warrant or represent that any license, either express or implied, is granted under any patent right, copyright, mask work right, or other intellectual property right relating to any combination, machine, or process in which TI components or services are used. Information published by TI regarding third-party products or services does not constitute a license to use such products or services or a warranty or endorsement thereof. Use of such information may require a license from a third party under the patents or other intellectual property of the third party, or a license from TI under the patents or other intellectual property of TI.

Reproduction of significant portions of TI information in TI data books or data sheets is permissible only if reproduction is without alteration and is accompanied by all associated warranties, conditions, limitations, and notices. TI is not responsible or liable for such altered documentation. Information of third parties may be subject to additional restrictions.

Resale of TI components or services with statements different from or beyond the parameters stated by TI for that component or service voids all express and any implied warranties for the associated TI component or service and is an unfair and deceptive business practice. TI is not responsible or liable for any such statements.

Buyer acknowledges and agrees that it is solely responsible for compliance with all legal, regulatory and safety-related requirements concerning its products, and any use of TI components in its applications, notwithstanding any applications-related information or support that may be provided by TI. Buyer represents and agrees that it has all the necessary expertise to create and implement safeguards which anticipate dangerous consequences of failures, monitor failures and their consequences, lessen the likelihood of failures that might cause harm and take appropriate remedial actions. Buyer will fully indemnify TI and its representatives against any damages arising out of the use of any TI components in safety-critical applications.

In some cases, TI components may be promoted specifically to facilitate safety-related applications. With such components, TI’s goal is to help enable customers to design and create their own end-product solutions that meet applicable functional safety standards and requirements. Nonetheless, such components are subject to these terms.

No TI components are authorized for use in FDA Class III (or similar life-critical medical equipment) unless authorized officers of the parties have executed a special agreement specifically governing such use.

Only those TI components which TI has specifically designated as military grade or “enhanced plastic” are designed and intended for use in military/aerospace applications or environments. Buyer acknowledges and agrees that any military or aerospace use of TI components which have ***not*** been so designated is solely at the Buyer's risk, and that Buyer is solely responsible for compliance with all legal and regulatory requirements in connection with such use.

TI has specifically designated certain components as meeting ISO/TS16949 requirements, mainly for automotive use. In any case of use of non-designated products, TI will not be responsible for any failure to meet ISO/TS16949.

Products		**Applications**	
Audio	www.ti.com/audio	Automotive and Transportation	www.ti.com/automotive
Amplifiers	amplifier.ti.com	Communications and Telecom	www.ti.com/communications
Data Converters	dataconverter.ti.com	Computers and Peripherals	www.ti.com/computers
DLP® Products	www.dlp.com	Consumer Electronics	www.ti.com/consumer-apps
DSP	dsp.ti.com	Energy and Lighting	www.ti.com/energy
Clocks and Timers	www.ti.com/clocks	Industrial	www.ti.com/industrial
Interface	interface.ti.com	Medical	www.ti.com/medical
Logic	logic.ti.com	Security	www.ti.com/security
Power Mgmt	power.ti.com	Space, Avionics and Defense	www.ti.com/space-avionics-defense
Microcontrollers	microcontroller.ti.com	Video and Imaging	www.ti.com/video
RFID	www.ti-rfid.com		
OMAP Applications Processors	www.ti.com/omap	**TI E2E Community**	e2e.ti.com
Wireless Connectivity	www.ti.com/wirelessconnectivity		

Mailing Address: Texas Instruments, Post Office Box 655303, Dallas, Texas 75265
Copyright © 2013, Texas Instruments Incorporated

AMEYA360
Components Supply Platform

Authorized Distribution Brand :

Website :

Welcome to visit www.ameya360.com

Contact Us :

- ## Address :

401 Building No.5, JiuGe Business Center, Lane 2301, Yishan Rd
Minhang District, Shanghai , China

- ## Sales :

Direct +86 (21) 6401-6692

Email amall@ameya360.com

QQ 800077892

Skype ameyasales1 ameyasales2

- ## Customer Service :

Email service@ameya360.com

- ## Partnership :

Tel +86 (21) 64016692-8333

Email mkt@ameya360.com