Art.-Number: 702605

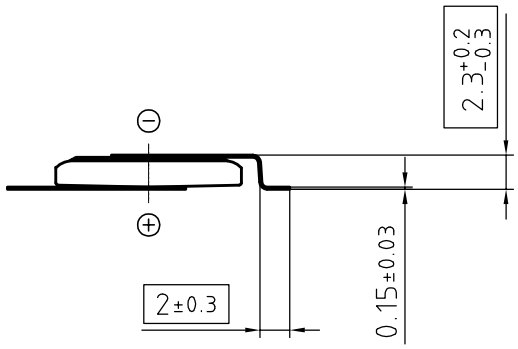

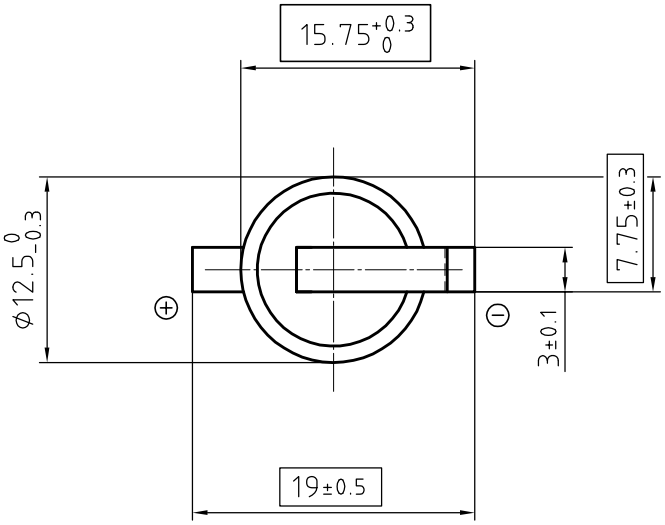

- Samples can deviate in the execution from the serie.

- Dimensions and tolerances can be specified only after the testing of the devices for the mass production definitely

Tab material: Isotan (54%Cu,44%Ni,Mn)

All framed values will be used for dimension checking !

Rev.	○			Rev.	○				Customer's Approval		
Rev.	○			Rev.	○				Date		
Rev.	○			Rev.	○				Signature		
Titel: CR1220 MFR SM								Scale 2:1	Drawn	21.01.10	Wu Ping
									Checked		
									Approved		

renata batteries

CH–4452 Itingen
Switzerland

10.0489.4–

AMEYA360
Components Supply Platform

Authorized Distribution Brand :

Website :

Welcome to visit www.ameya360.com

Contact Us :

- ### Address :

  401 Building No.5, JiuGe Business Center, Lane 2301, Yishan Rd
  Minhang District, Shanghai , China

- ### Sales :

  Direct +86 (21) 6401-6692

  Email amall@ameya360.com

  QQ 800077892

  Skype ameyasales1 ameyasales2

- ### Customer Service :

  Email service@ameya360.com

- ### Partnership :

  Tel +86 (21) 64016692-8333

  Email mkt@ameya360.com