REV.	DESCRIPTION/ECO NO.	DATE
	RELEASED	9/83
A	10.0 +/- 0.2	9/84
B	1.55 +/- 0.05 to 1.55 +/- 0.1	1/85
C	DRAWING CONVERTED TO CAD	01/01/00
	ADD DNW1-DW48 & DNW1-DW21	
D	DNW1-DW48 Pb FREE ADDED	3/17/05
E	DELETE PARTS DNW1-515, DW44	7/22/05

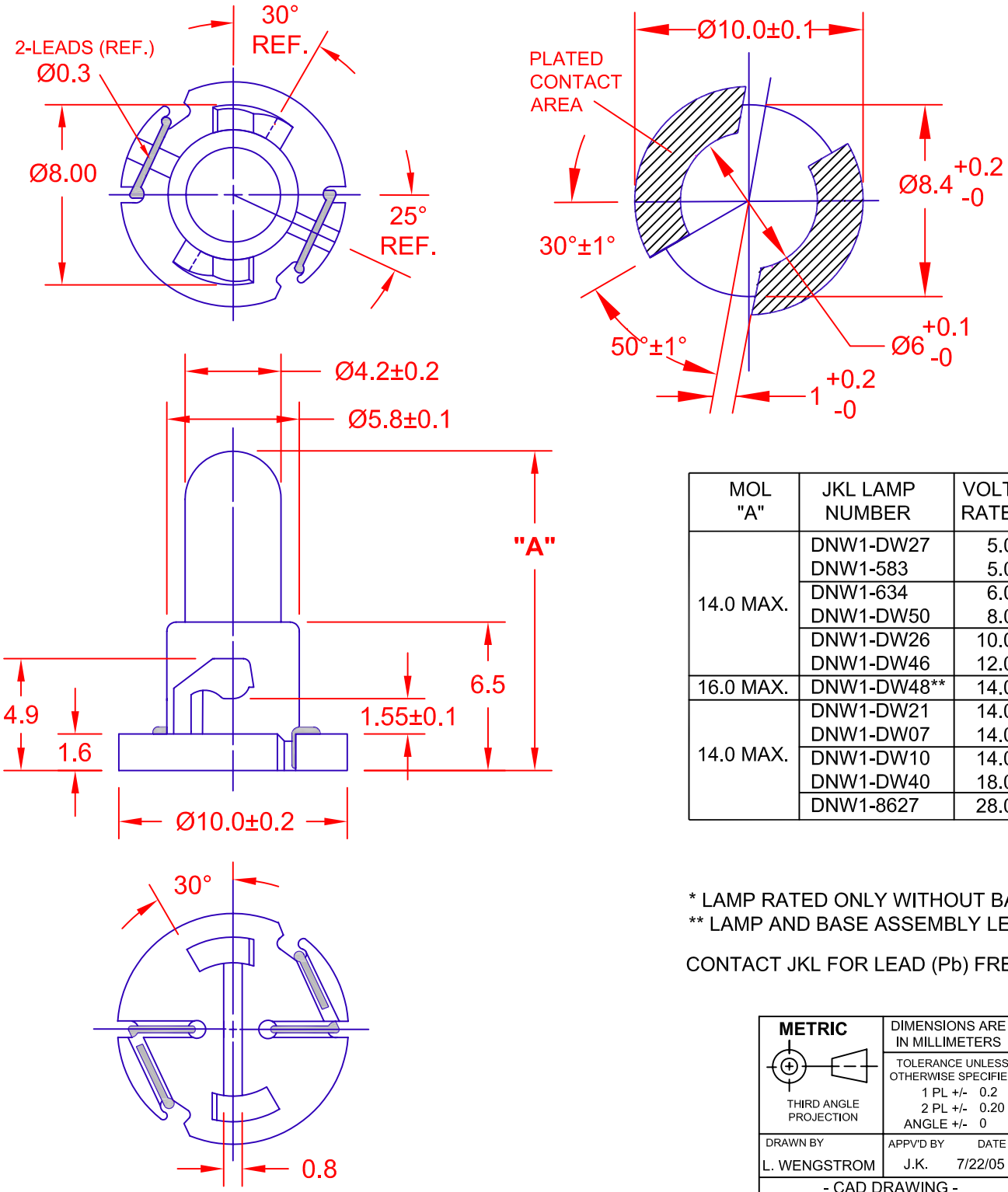

PC BOARD PUNCH PATTERN
(NO TREATMENT, SUCH AS APPLICATION OF FLUX, SHALL BE DONE.)

MOL "A"	JKL LAMP NUMBER	VOLTS RATED	AMPS ±10%	*MSCP ±25%	*LUMENS ±25%	AVERAGE LIFE HRS.	FILAMENT TYPE
14.0 MAX.	DNW1-DW27	5.0	.040	.028	0.35	20,000	C-2R
	DNW1-583	5.0	.060	.050	0.63	100,000	C-2R
	DNW1-634	6.0	.200	.630	7.92	1,000	C-2R
	DNW1-DW50	8.0	.050	.095	1.19	10,000	C-2V
	DNW1-DW26	10.0	.040	.080	1.01	30,000	C-2F
	DNW1-DW46	12.0	.060	.160	2.01	10,000	C-2V
16.0 MAX.	DNW1-DW48**	14.0	.040	.150	1.89	10,000	C-2V
14.0 MAX.	DNW1-DW21	14.0	.060	.200	2.51	10,000	C-2V
	DNW1-DW07	14.0	.080	.300	3.77	15,000	C-2V
	DNW1-DW10	14.0	.100	.500	6.29	10,000	C-2F
	DNW1-DW40	18.0	.040	.150	1.89	10,000	C-2F
	DNW1-8627	28.0	.040	.340	4.27	2,800	C-2F

* LAMP RATED ONLY WITHOUT BASE.
** LAMP AND BASE ASSEMBLY LEAD (Pb) FREE.

CONTACT JKL FOR LEAD (Pb) FREE LOT IDENTIFICATION.

METRIC THIRD ANGLE PROJECTION	DIMENSIONS ARE IN MILLIMETERS TOLERANCE UNLESS OTHERWISE SPECIFIED 1 PL +/- 0.2 2 PL +/- 0.20 ANGLE +/- 0	JKL COMPONENTS CORPORATION TITLE T-1 1/4 NEO-WEDGE BASE WITH MULTIPLE LAMP LISTING				
DRAWN BY L. WENGSTROM	APPV'D BY J.K. DATE 7/22/05	SIZE A	FSCM NO. 55335	DRAWING NO. DNW1-MULTI		
- CAD DRAWING - MANUAL REVISIONS NOT PERMITTED		SCALE NONE	RELEASED DATE 9/83	REVISION DATE 7/22/05	REV. NO. E	SHEET 1 OF 1

AMEYA360
Components Supply Platform

Authorized Distribution Brand :

Website :

Welcome to visit www.ameya360.com

Contact Us :

- ### Address :

  401 Building No.5, JiuGe Business Center, Lane 2301, Yishan Rd
  Minhang District, Shanghai , China

- ### Sales :

  Direct +86 (21) 6401-6692

  Email amall@ameya360.com

  QQ 800077892

  Skype ameyasales1 ameyasales2

- ### Customer Service :

  Email service@ameya360.com

- ### Partnership :

  Tel +86 (21) 64016692-8333

  Email mkt@ameya360.com