TS822

2.5V micropower shunt voltage reference

Features

- 2.50V typical output voltage
- Ultra low current consumption: 40µA typ.
- High precision @ 25°C
  - ±2% (standard version)
  - ±1% (A grade)
- High stability when used with capacitive loads
- Industrial temperature range: -40°C to +85°C
- 100ppm/°C maximum temperature coefficient

Applications

- Computers
- Instrumentation
- Battery chargers
- Switch mode power supply
- Battery operated equipment

Description

The TS822 is a low power shunt voltage reference providing a stable 2.5V output voltage over the industrial temperature range (-40°C to +85°C). Availabe in SOT23-3 surface mount package, it can be designed in applications where space saving is critical.

The low operating current is a key advantage for power restricted designs. In addition, the TS822 is very stable and can be used in a broad range of application conditions.

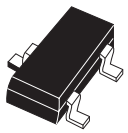

L
SOT23-3L
(Plastic micropackage)

Pin connections
(Top view)

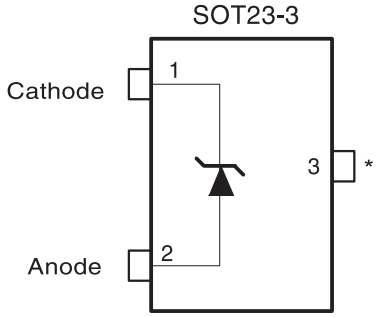

* This pin must be left floating or connected to pin 2

1 Absolute maximum ratings and operating conditions

Table 1. Absolute maximum ratings

Symbol	Parameter	Value	Unit
I_k	Reverse breakdown current	20	mA
I_f	Forward current	10	mA
P_d	Power dissipation [1]SOT23-3	360	mW
T_{stg}	Storage temperature	-65 to +150	°C
ESD	Human body model (HBM)[2]	2	kV
	Machine model (MM)[3]	200	V
T_{lead}	Lead temperature (soldering, 10 seconds)	260	°C

1. P_d is calculated with T_{amb} = 25°C and R_{thja} = 340°C/W for the SOT23-3L package
2. Human body model: 100pF discharged through a 1.5kΩ resistor between two pins of the device, done for all couples of pin combinations with other pins floating.
3. Machine model: a 200pF cap is charged to the specified voltage, then discharged directly between two pins of the device with no external series resistor (internal resistor < 5Ω), done for all couples of pin combinations with other pins floating.

Table 2. Operating conditions

Symbol	Parameter	Value	Unit
$I_{k\text{-}min}$	Minimum operating current	50	µA
$I_{k\text{-}max}$	Maximum operating current	15	mA
T_{oper}	Operating free air temperature range	-40 to +85	°C

2 Electrical characteristics

Table 3. TS822 (2% precision) T_{amb} = 25°C(1) (unless otherwise specified)

Symbol	Parameter	Test conditions	Min.	Typ.	Max.	Unit
V_k	Reverse breakdown voltage	I_k = 100µA	2.45	2.5	2.55	V
	Reverse breakdown voltage tolerance	I_k = 100µA -40°C < T_{amb} < +85°C	-50 -66		50 66	mV
$I_{k\text{-}min}$	Minimum operating current	T = 25°C		40	50	µA
		-40°C < T_{amb} < +85°C			60	
$\Delta V_{ref}/\Delta T$	Average temperature coefficient	I_k = 100µA		30	100	ppm/°C
$\Delta V_k/\Delta I_k$	Reverse breakdown voltage change with operating current range	$I_{k\text{-}min}$ < I_k < 1mA -40°C < T_{amb} < +85°C		0.4	1 1.2	mV
		1mA < I_k < 15mA -40°C < T_{amb} < +85°C		2.5	8 10	
R_{ka}	Reverse static impedance	I_k = $I_{k\text{-}min}$ to 1mA -40°C < T_{amb} < +85°C		0.4	1 1.2	Ω
		I_k = 1 to 15mA -40°C < T_{amb} < +85°C		0.2	0.6 0.7	
K_{vh}	Long term stability	I_k = 100µA, t = 1000hrs		120		ppm
En	Wide band noise	I_k = 100µA, 10Hz < f < 10kHz		35		nV/√Hz

1. Limits are 100% production tested at 25°C. Behavior at temperature range limits is guaranteed by correlation and design.

Table 4. TS822A (1% precision) T_{amb} = 25°C(1) (unless otherwise specified)

Symbol	Parameter	Test conditions	Min.	Typ.	Max.	Unit
V_k	Reverse breakdown voltage	I_k = 100µA	2.475	2.5	2.525	V
	Reverse breakdown voltage tolerance	I_k = 100µA -40°C < T_{amb} < +85°C	-25 -41		25 41	mV
$I_{k\text{-}min}$	Minimum operating current	T = 25°C		40	50	µA
		-40°C < T_{amb} < +85°C			60	
$\Delta V_{ref}/\Delta T$	Average temperature coefficient	I_k = 100µA		30	100	ppm/°C
$\Delta V_k/\Delta_{Ik}$	Reverse breakdown voltage change with operating current range	$I_{k\text{-}min}$ < I_k < 1mA -40°C < T_{amb} < +85°C		0.4	1 1.2	mV
		1mA < I_k < 15mA -40°C < T_{amb} < +85°C		2.5	8 10	
R_{ka}	Reverse static impedance	I_k = $I_{k\text{-}min}$ to 1mA -40°C < T_{amb} < +85°C		0.4	1 1.2	Ω
		I_k = 1mA to 15mA -40°C < T_{amb} < +85°C		0.2	0.6 0.7	
K_{vh}	Long term stability	I_k = 100µA, t = 1000hrs		120		ppm
En	Wide band noise	I_k = 100µA, 10Hz < f < 10kHz		35		nV/√Hz

1. Limits are 100% production tested at 25°C. Behavior at temperature range limits is guaranteed by correlation and design.

Figure 1. Reference voltage versus cathode current

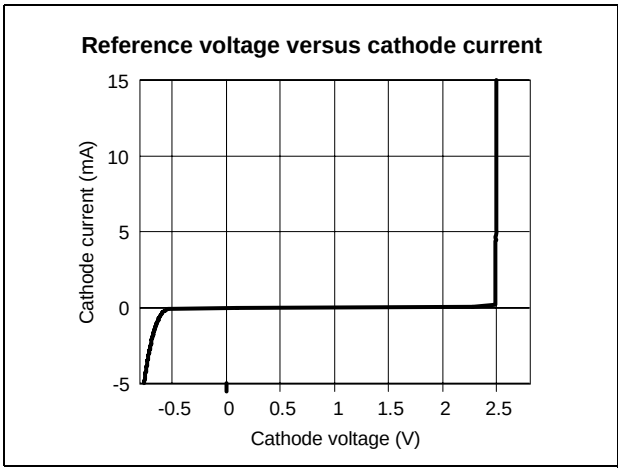

Figure 2. Minimum operating current

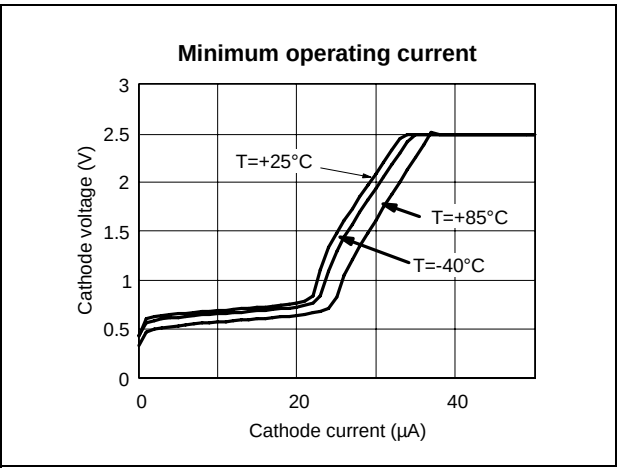

Figure 3. Test circuit

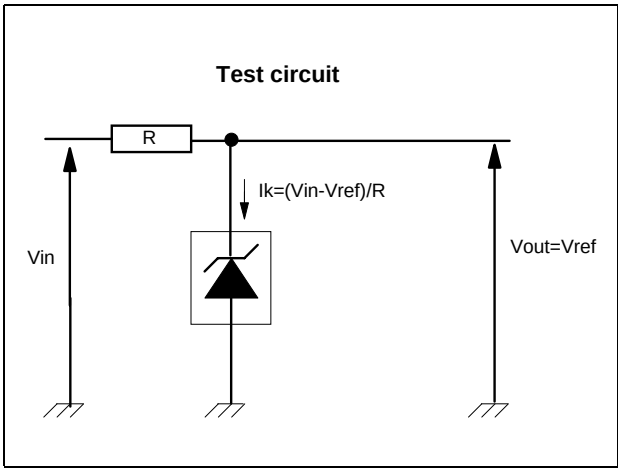

Figure 4. Reference voltage versus temperature

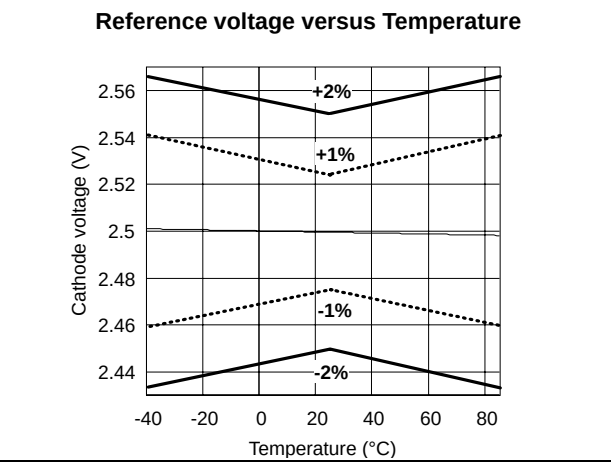

Figure 5. Static impedance (R_{ka}) versus temperature

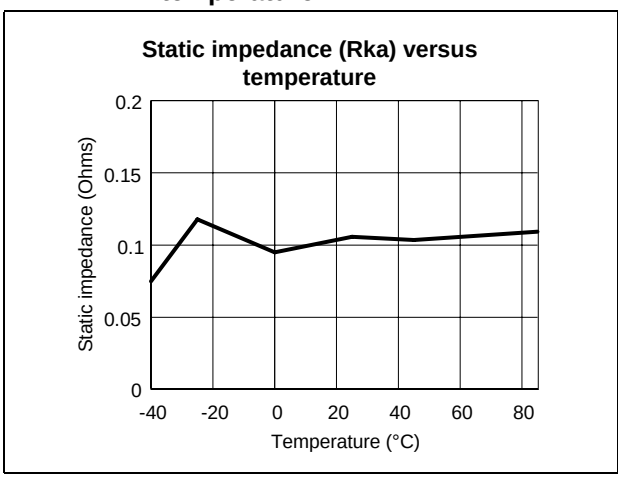

Figure 6. Noise voltage versus frequency

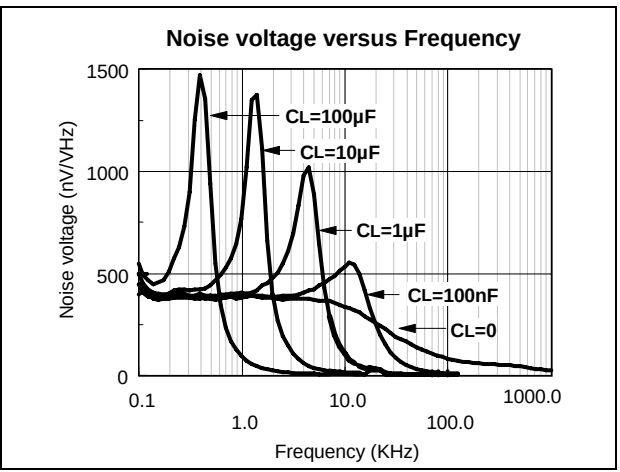

Figure 7. Test circuit for pulse response at I_k=100µA

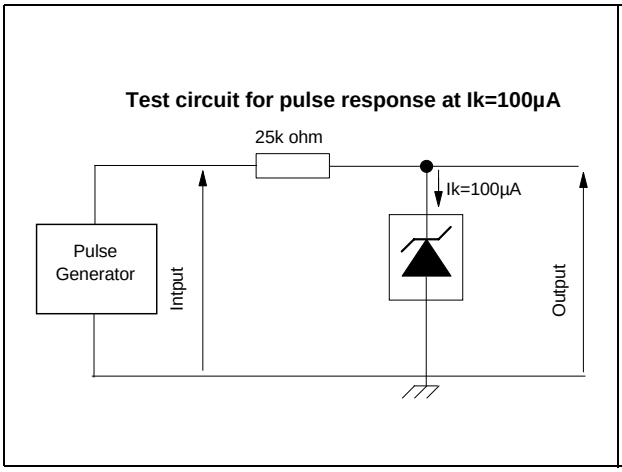

Figure 8. Pulse response for I_k=100µA

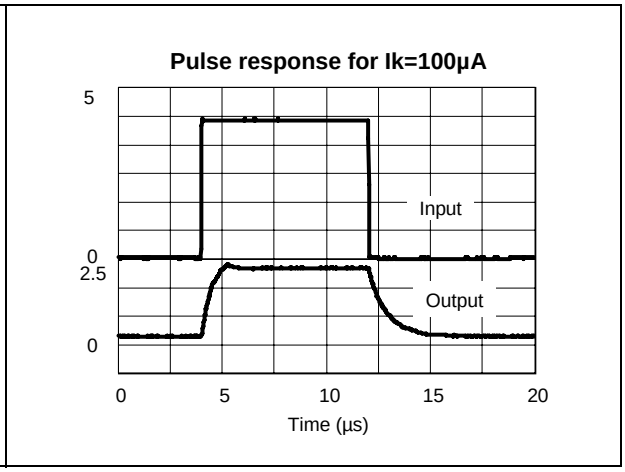

Figure 9. Pulse response for I_k=100µA (detailed part)

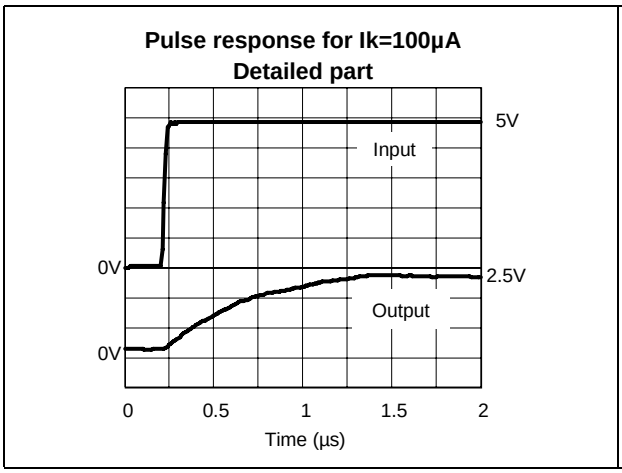

Figure 10. Pulse response for I_k=100µA (detailed part)

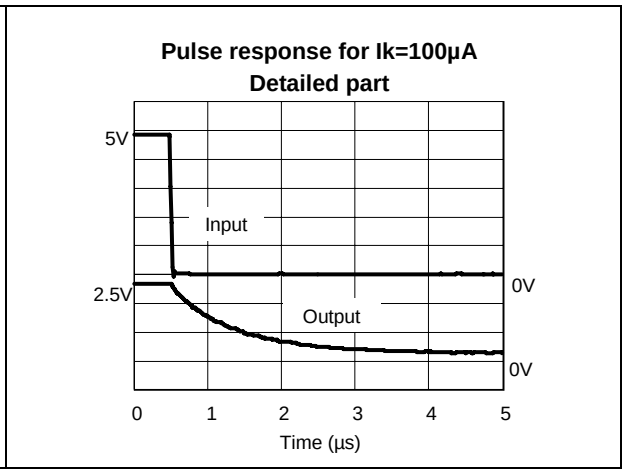

Figure 11. Test circuit for pulse response at I_k=100mA

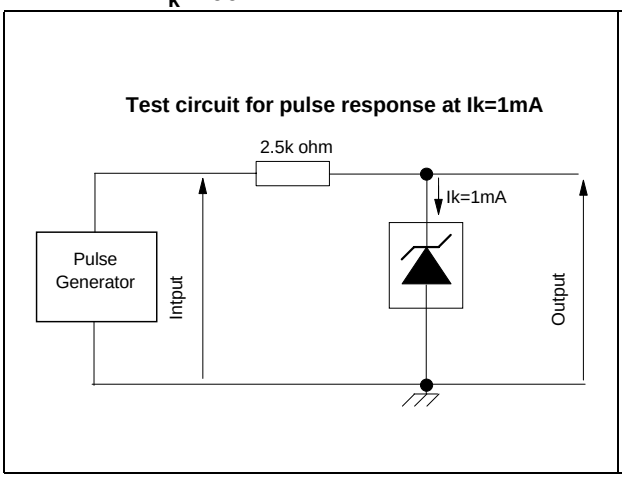

Figure 12. Pulse response for I_k=100mA

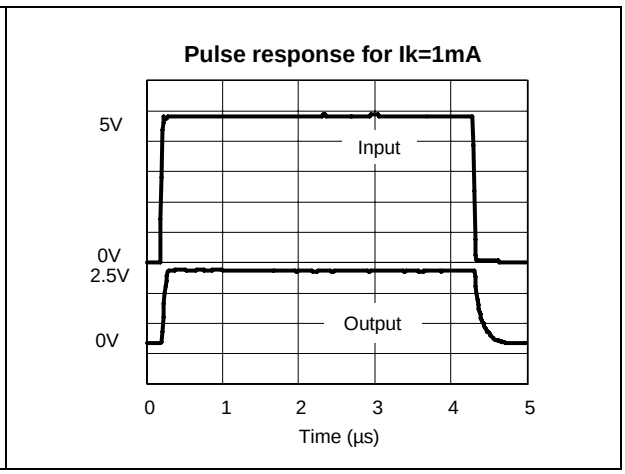

Figure 13. Pulse response for I_k=100mA (detailed part)

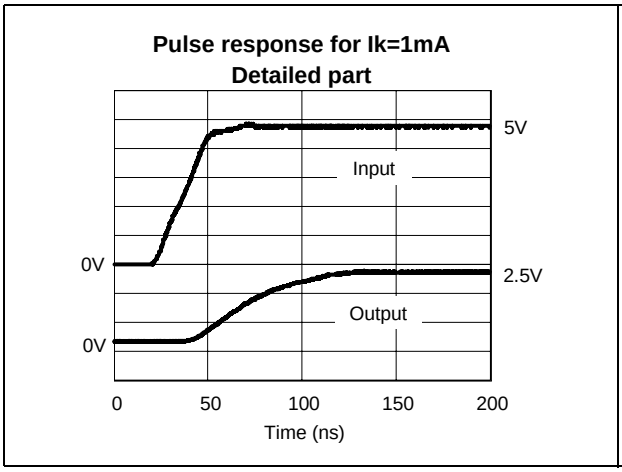

Figure 14. Pulse response for I_k=100mA (detailed part)

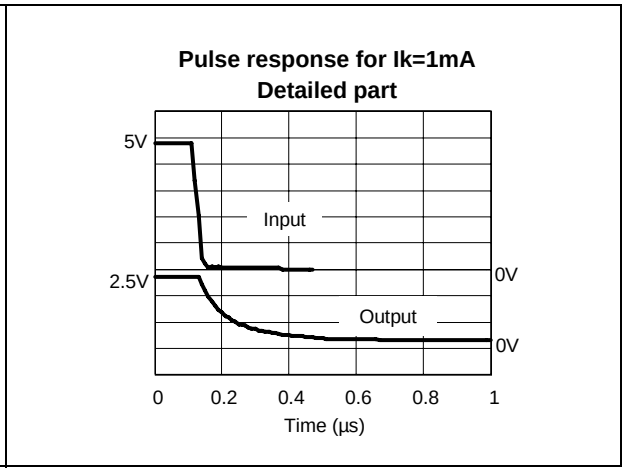

3 Package information

In order to meet environmental requirements, STMicroelectronics offers these devices in ECOPACK® packages. These packages have a lead-free second level interconnect. The category of second level interconnect is marked on the package and on the inner box label, in compliance with JEDEC Standard JESD97. The maximum ratings related to soldering conditions are also marked on the inner box label. ECOPACK is an STMicroelectronics trademark. ECOPACK specifications are available at: www.st.com.

Figure 15. SOT23-3 package mechanical data

Ref.	Dimensions					
	Millimeters			Mils		
	Min.	Typ.	Max.	Min.	Typ.	Max.
A	0.890		1.120	35.05		44.12
A1	0.010		0.100	0.39		3.94
A2	0.880	0.950	1.020	34.65	37.41	40.17
b	0.300		0.500	11.81		19.69
C	0.080		0.200	3.15		7.88
D	2.800	2.900	3.040	110.26	114.17	119.72
E	2.100		2.64	82.70		103.96
E1	1.200	1.300	1.400	47.26	51.19	55.13
e		0.950			37.41	
e1		1.900			74.82	
L	0.400		0.600	15.75		23.63
L1		0.540			21.27	
k	0°		8°	0°		8°

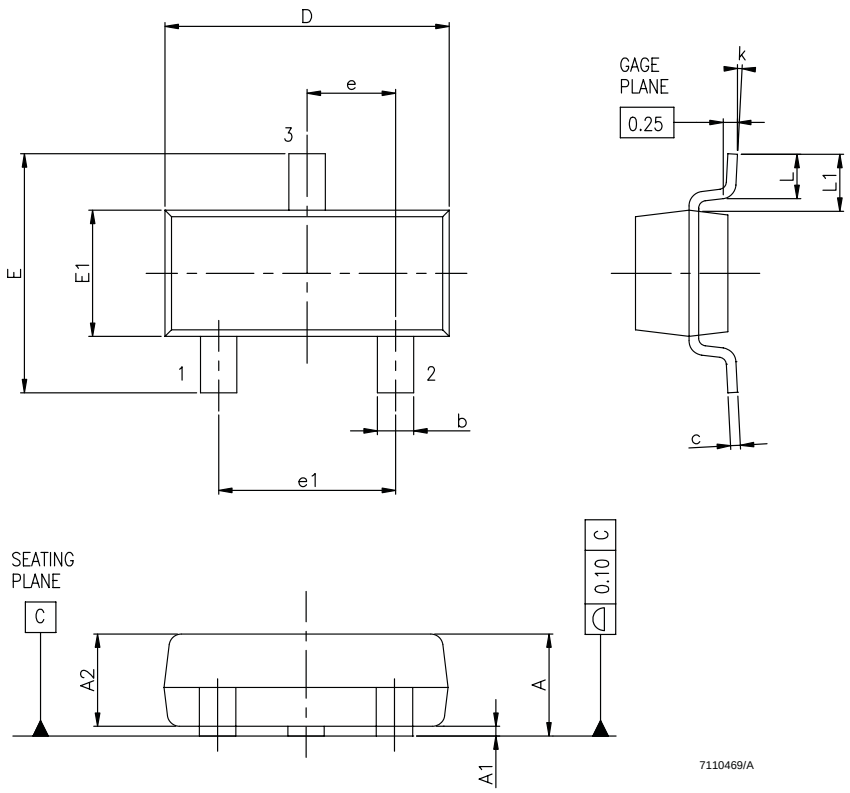

4 Ordering information

Table 5. Order codes

Part number	Precision	Temperature range	Package	Packing	Marking
TS822ILT	2%	-40°C to +85°C	SOT23-3	Tape & reel	L223
TS822AILT	1%				L222

5 Revision history

Table 6. Document revision history

Date	Revision	Changes
21-Mar-2002	1	Initial release.
20-Aug-2007	2	Removed information related to TO-92 package. Format update.

Please Read Carefully:

Information in this document is provided solely in connection with ST products. STMicroelectronics NV and its subsidiaries (“ST”) reserve the right to make changes, corrections, modifications or improvements, to this document, and the products and services described herein at any time, without notice.

All ST products are sold pursuant to ST’s terms and conditions of sale.

Purchasers are solely responsible for the choice, selection and use of the ST products and services described herein, and ST assumes no liability whatsoever relating to the choice, selection or use of the ST products and services described herein.

No license, express or implied, by estoppel or otherwise, to any intellectual property rights is granted under this document. If any part of this document refers to any third party products or services it shall not be deemed a license grant by ST for the use of such third party products or services, or any intellectual property contained therein or considered as a warranty covering the use in any manner whatsoever of such third party products or services or any intellectual property contained therein.

UNLESS OTHERWISE SET FORTH IN ST’S TERMS AND CONDITIONS OF SALE ST DISCLAIMS ANY EXPRESS OR IMPLIED WARRANTY WITH RESPECT TO THE USE AND/OR SALE OF ST PRODUCTS INCLUDING WITHOUT LIMITATION IMPLIED WARRANTIES OF MERCHANTABILITY, FITNESS FOR A PARTICULAR PURPOSE (AND THEIR EQUIVALENTS UNDER THE LAWS OF ANY JURISDICTION), OR INFRINGEMENT OF ANY PATENT, COPYRIGHT OR OTHER INTELLECTUAL PROPERTY RIGHT.

UNLESS EXPRESSLY APPROVED IN WRITING BY AN AUTHORIZED ST REPRESENTATIVE, ST PRODUCTS ARE NOT RECOMMENDED, AUTHORIZED OR WARRANTED FOR USE IN MILITARY, AIR CRAFT, SPACE, LIFE SAVING, OR LIFE SUSTAINING APPLICATIONS, NOR IN PRODUCTS OR SYSTEMS WHERE FAILURE OR MALFUNCTION MAY RESULT IN PERSONAL INJURY, DEATH, OR SEVERE PROPERTY OR ENVIRONMENTAL DAMAGE. ST PRODUCTS WHICH ARE NOT SPECIFIED AS "AUTOMOTIVE GRADE" MAY ONLY BE USED IN AUTOMOTIVE APPLICATIONS AT USER’S OWN RISK.

Resale of ST products with provisions different from the statements and/or technical features set forth in this document shall immediately void any warranty granted by ST for the ST product or service described herein and shall not create or extend in any manner whatsoever, any liability of ST.

ST and the ST logo are trademarks or registered trademarks of ST in various countries.

Information in this document supersedes and replaces all information previously supplied.

The ST logo is a registered trademark of STMicroelectronics. All other names are the property of their respective owners.

© 2007 STMicroelectronics - All rights reserved

STMicroelectronics group of companies

Australia - Belgium - Brazil - Canada - China - Czech Republic - Finland - France - Germany - Hong Kong - India - Israel - Italy - Japan - Malaysia - Malta - Morocco - Singapore - Spain - Sweden - Switzerland - United Kingdom - United States of America

www.st.com

AMEYA360
Components Supply Platform

Authorized Distribution Brand :

Website :

Welcome to visit www.ameya360.com

Contact Us :

Address :

401 Building No.5, JiuGe Business Center, Lane 2301, Yishan Rd
Minhang District, Shanghai , China

Sales :

Direct +86 (21) 6401-6692

Email amall@ameya360.com

QQ 800077892

Skype ameyasales1 ameyasales2

Customer Service :

Email service@ameya360.com

Partnership :

Tel +86 (21) 64016692-8333

Email mkt@ameya360.com