REV.	DESC
A	NEW D

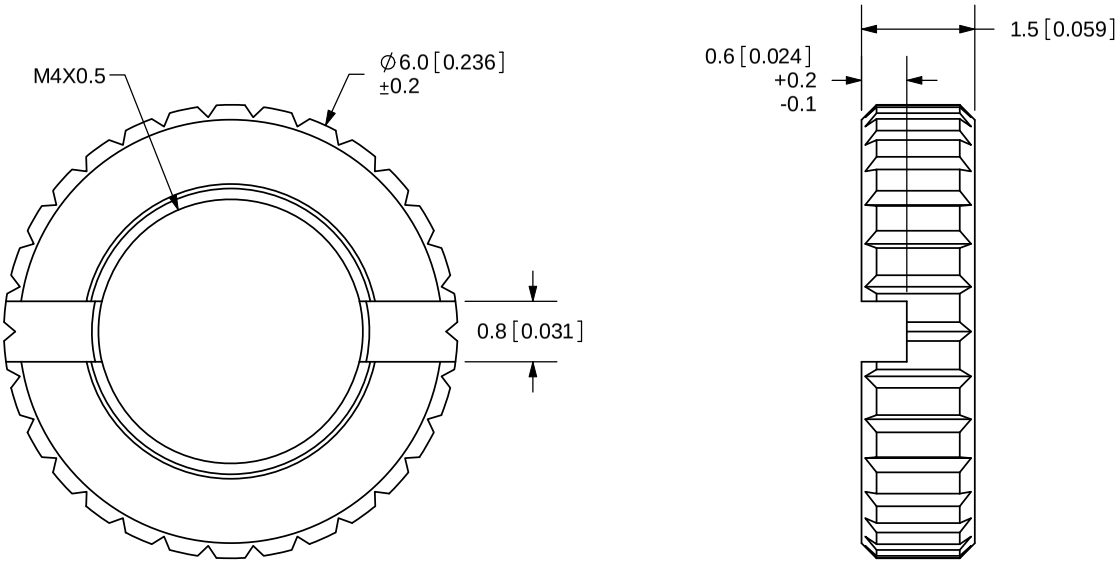

TOLERANCE:
±0.1mm UNLESS O
SPECIFIED

TITLE: M4X0.5 NUT

PART NO. 2.5mm-nut-

DRAWN BY: ZRJ

PC FILE NAME: 2.5mm-nut-e

COPYRIGHT 2009
BY CUI INC.

	MATERIAL	PLATING	COLOR
NUT	Brass	Nickel	Silver

AMEYA360
Components Supply Platform

Authorized Distribution Brand :

Website :

Welcome to visit www.ameya360.com

Contact Us :

- ### Address :

  401 Building No.5, JiuGe Business Center, Lane 2301, Yishan Rd
  Minhang District, Shanghai , China

- ### Sales :

  Direct +86 (21) 6401-6692

  Email amall@ameya360.com

  QQ 800077892

  Skype ameyasales1 ameyasales2

- ### Customer Service :

  Email service@ameya360.com

- ### Partnership :

  Tel +86 (21) 64016692-8333

  Email mkt@ameya360.com