PART NO	PLATING
90518-102 SEE NOTE 5	0.38um/15u" GOLD OR GXT CONTACT. OVER 1.27um/50u" Ni (NOTE 6)
90518-202 SEE NOTE 5	0.76um/30u" GOLD OR GXT ON CONTACT AREA. OVER 1.27um/50u" Ni (NOTE 6)
71363-302 SEE NOTE 5	2.54um/100u" TIN/LEAD PLATING
90518-102LF SEE NOTE 5	0.38um/15u" GOLD OR GXT CONTACT. OVER 1.27um/50u" Ni (NOTE 6)
90518-202LF SEE NOTE 5	0.76um/30u" GOLD OR GXT ON CONTACT AREA. OVER 1.27um/50u" Ni (NOTE 6)

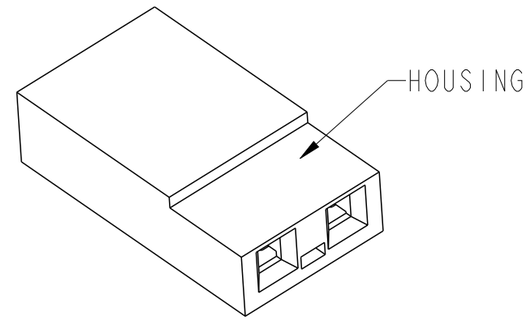

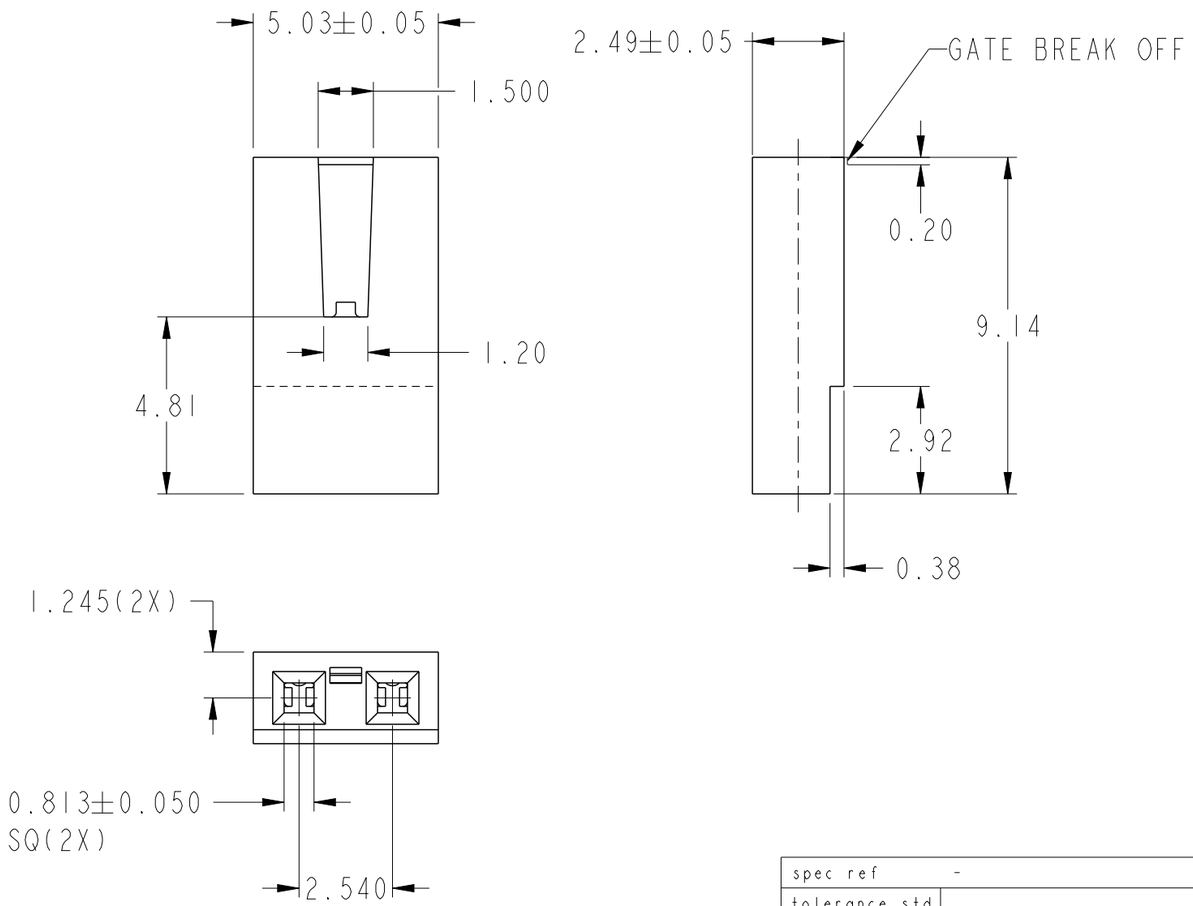

NOTES:

1. MATERIAL
   HOUSING : 30% GLASS FILLED POLYESTER
   FLAME RETARDANT PER UL 94V-0
   COLOR : BLACK
2. TERMINAL : PHOSPHOR BRONZE
   PLATING : REFER TO CHART
3. 90518-102 AND 90518-202 ARE THE SAME AS 90518-102LF AND 90518-202LF RESPECTIVELY. THE SUFFIX"LF" IS ADDED FOR EASY LEAD-FREE IDENTIFICATION.
4. THE HOUSING WILL WITHSTAND EXPOSURE TO 200°C PEAK TEMPERATURE FOR 10 SECONDS IN A CONVECTION,INFRA-RED OR VAPOR PHASE REFLOW OVEN.
5. THIS PRODUCT MEETS EUROPEAN UNION DIRECTIVES AND OTHER COUNTRY REGULATIONS AS DESCRIBED IN GS-22-008.
6. PLATING OPTION:
   MAY BE EITHER GOLD OR GXT PLATED AT MANUFACTURER'S OPTION

Copyright FCI.

CONFIDENTIAL

spec ref	-	dr	Louis Ng	2010/10/12	projection	MM	size A3 / scale 6:1
tolerance std ISO 406 ISO 1101	TOLERANCES UNLESS OTHERWISE SPECIFIED	eng	Guo-Min Sun	2013/05/16			
		chr	-	-			ecn no ELX-N-14401-1
		appr	Rick Bian	2013/05/26	product family	JUMPER	rel level Released
surface -	linear 0.X ±0.35 / 0.XX ±0.25 / 0.XXX ±0.10	FCI	title HIGH BODY JUMPER -		dwg no 90518		rev F
ISO 1302	angular 0° ±3°	www.fci.com	cat. no. -		-		sheet 1 of 1

Pro/E File - REV C - 2009-06-09

AMEYA360
Components Supply Platform

Authorized Distribution Brand :

Website :

Welcome to visit www.ameya360.com

Contact Us :

- Address :

401 Building No.5, JiuGe Business Center, Lane 2301, Yishan Rd
Minhang District, Shanghai , China

- Sales :

Direct +86 (21) 6401-6692

Email amall@ameya360.com

QQ 800077892

Skype ameyasales1 ameyasales2

- Customer Service :

Email service@ameya360.com

- Partnership :

Tel +86 (21) 64016692-8333

Email mkt@ameya360.com