THIS DRAWING IS UNPUBLISHED. RELEASED FOR PUBLICATION
© COPYRIGHT – BY TYCO ELECTRONICS CORPORATION. ALL RIGHTS RESERVED.

LOC	DIST
ES	00

REVISIONS

P	LTR	DESCRIPTION	DATE	DWN	APVD
	B	REVISED FB00-0012-045	24JAN05	C.W	I.E

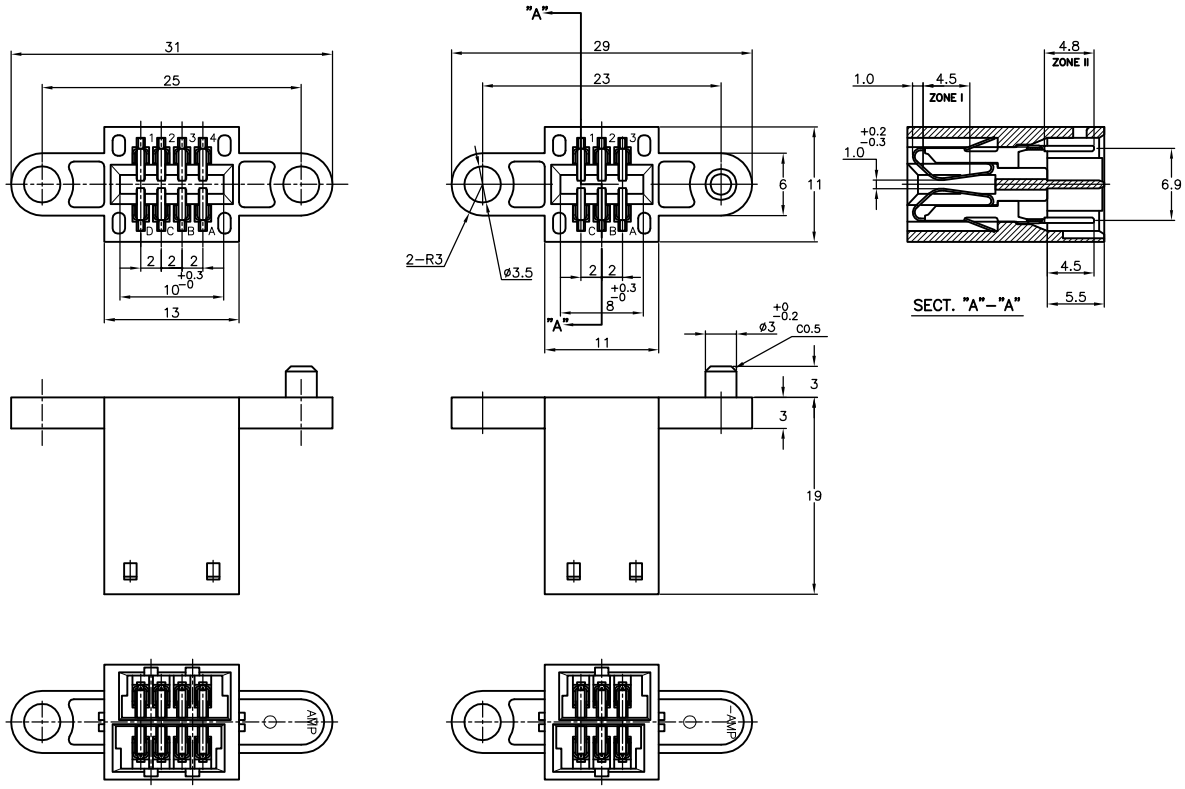

NOTES:

1. MATERIAL: H.S.G: GLASS–FILLED P.B.T COLOR: BLACK
   CONTACT: COPPER ALLOY
2. FINISH: CONTACT: MATTE TIN PLATE NICKEL UNDER–PLATE ALL OVER.
3. FINISH: CONTACT: GOLD PLATE 0.15–0.3um AT CONTACT AREA ZONE I
   MATTE TIN PLATE 0.1–0.3um AT CONTACT AREA ZONE II
   NICKEL UNDER–PLATE ALL OVER.
4. MATING CONN. (WIRE SIDE AWG#26–#28)
   6POS. TYPE173977–3 OR 175778–3
   8POS. TYPE173977–4 OR 175778–3
5. SPEC.: CURRENT RATING 2A MAX./PIN
6. RECOMMENDED MATING P.C.B DIMENSIONS

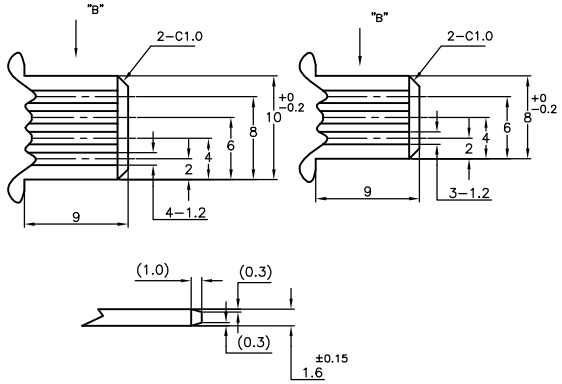

VIEW "B"

3	8	292204–3
2	8	292204–2
2	6	292204–1
FINISH	POS.	PART NUMBER

THIS DRAWING IS A CONTROLLED DOCUMENT.

TOLERANCES UNLESS OTHERWISE SPECIFIED
10⩾* : ±0.2
30⩾*>10 : ±0.25
100⩾*>30 : ±0.3
ANGLE : ±3°

DIMENSIONS: MM

TOLERANCES UNLESS OTHERWISE SPECIFIED:
0 PLC ± 0.15
1 PLC ± 0.15
2 PLC ± 0.15
3 PLC ± 0.15
4 PLC ± 0.15
ANGLES ± 1°

MATERIAL: SEE NOTES
FINISH: SEE NOTES

DWN J.JIANG 05FEB03
CHK S.YAO 05FEB03
APVD T.SASAKI 05FEB03
PRODUCT SPEC 108–60024
APPLICATION SPEC
WEIGHT
CUSTOMER DRAWING

tyco Electronics
Tyco Electronics Corporation
Shanghai, P.R.China,200233

NAME: ASSSEMBLY (6P & 8P) FOR CT CARD EDGE CONNECTOR

SIZE	CAGE CODE	DRAWING NO	RESTRICTED TO
A3	00779	C–292204	—

SCALE 2:1 SHEET 1 OF 1 REV B

AMP 1470–19 REV 31MAR2000

AMEYA360
Components Supply Platform

Authorized Distribution Brand :

Website :

Welcome to visit www.ameya360.com

Contact Us :

- ### Address :

  401 Building No.5, JiuGe Business Center, Lane 2301, Yishan Rd
  Minhang District, Shanghai , China

- ### Sales :

  Direct +86 (21) 6401-6692

  Email amall@ameya360.com

  QQ 800077892

  Skype ameyasales1 ameyasales2

- ### Customer Service :

  Email service@ameya360.com

- ### Partnership :

  Tel +86 (21) 64016692-8333

  Email mkt@ameya360.com