DATE	REVISIONS	REV
7-20-93	CHG'D DIMENSIONS WHERE NOTED/	A
5-4-95	UPDATED SAFE OP. SPECS., ADDED CTR. LINE DIM./	B
7-5-95	UPDATED WHERE NOTED./	C

DRAWING NUMBER SSF-LXH4RA5GD REV C

UNCONTROLLED DOCUMENT

UNCONTROLLED DOCUMENT

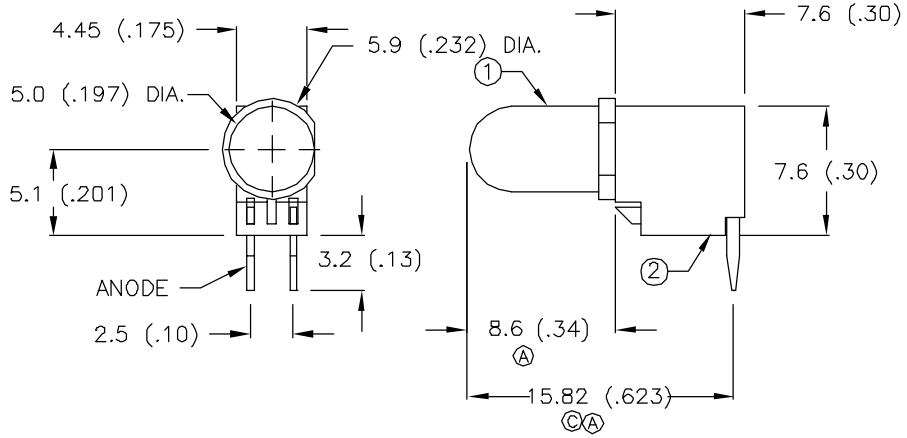

ELECTRO-OPTICAL CHARACTERISTICS TA=25 °C I_f=20mA

PARAMETER	MIN	TYP	MAX	UNITS	TEST COND
PEAK WAVELENGTH		565 (GREEN)		nm	
FORWARD VOLTAGE		2.1	2.8	V_f	
REVERSE VOLTAGE	5.0			V_r	I_r=100uA
© AXIAL INTENSITY		30		mcd	I_f=20mA
© VIEWING ANGLE		60		2x theta	
EMITTED COLOR:	GREEN				
EPOXY LENS FINISH:	GREEN DIFFUSED				

LIMITS OF SAFE OPERATION AT 25 DEG. C

PARAMETER	MAX	UNITS
PEAK FORWARD CURRENT*	150	mA
STEADY CURRENT	25	mA
POWER DISSIPATION	105	mW
DERATE FROM 25 °C	-1.6	mW/ °C
OPERATING, STORAGE TEMP.	-40 TO +85	°C
LEAD SOLDERING TEMP.	+260	°C
2.0mm FROM BODY		3 SEC. MAX

* t<10uS

NOTES:

1. SSL-LX5093GD LED.
2. IFS-LX4FRA-1 LAMP SOCKET.
3. CUT LED LEADS 5mm LONG.
4. ASSEMBLE IN SOCKET, POLARITY AS SHOWN.

RELIABILITY NOTE:

OUR MANY YEARS OF EXPERIENCE DATA ACCUMULATION INDICATE THAT SOLDER HEAT IS A MAJOR CAUSE OF EARLY AND FUTURE FAILURE. PLEASE PAY ATTENTION TO YOUR SOLDERING PROCESS.

UNCONTROLLED DOCUMENT

LUMEX OPTO COMPONENTS INC.
292 E. HELLEN ROAD
PALATINE, ILLINOIS 60067
(708) 359-2790

DATE: 4-15-93 | APPROVED BY: | DRAWN BY:

SCALE: DO NOT SCALE

T-1 3/4 LAMP, GREEN FAULT INDICATOR

DRAWING NUMBER SSF-LXH4RA5GD REV C

AMEYA360
Components Supply Platform

Authorized Distribution Brand :

Website :

Welcome to visit www.ameya360.com

Contact Us :

- **Address :**

  401 Building No.5, JiuGe Business Center, Lane 2301, Yishan Rd
  Minhang District, Shanghai , China

- **Sales :**

  Direct +86 (21) 6401-6692

  Email amall@ameya360.com

  QQ 800077892

  Skype ameyasales1 ameyasales2

- **Customer Service :**

  Email service@ameya360.com

- **Partnership :**

  Tel +86 (21) 64016692-8333

  Email mkt@ameya360.com