Alle Rechte vorbehalten/ *All rights reserved*

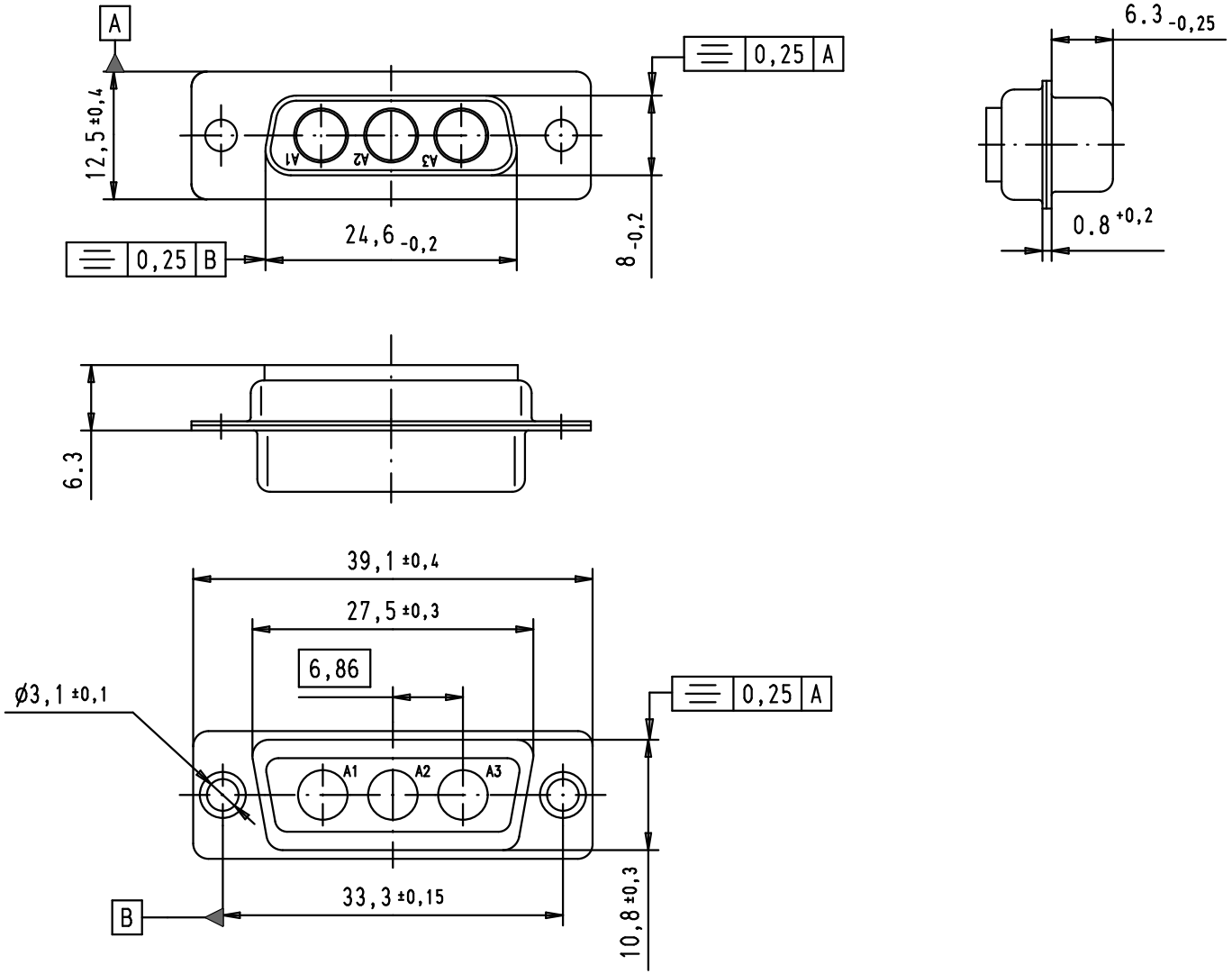


| | |
|---|---|
| 09 69 200 0033.500 | Non magnetic |
| 09 69 200 0033 | |
| Part number | |

| Mod. | Dat. | Name |
|---|---|---|
| EC01706 | 21/04/10 | SC |
| 32119 | 23/06/03 | AC |
| 31519 | 03/07/03 | TCP |
| 29738 | 13/11/01 | AF |

| | Dat. | Name |
|---|---|---|
| Detail. | 13/11/01 | AF |
| Insp. | | |
| Stand. | | |

All Dim. in mm
Orig. Size DIN A 4

HARTING EURL
F-95972 Paris

D-Sub, female,
3W3 without contacts,
with tin plated shell.

TB 09 69 200 0033

Sub.

Maßstab/ *Scale* 1,5:1

Blatt/ *Page* 1/1

# AMEYA360
Components Supply Platform

Authorized Distribution Brand :

Website :

Welcome to visit www.ameya360.com

Contact Us :

- Address :

401 Building No.5, JiuGe Business Center, Lane 2301, Yishan Rd
Minhang District, Shanghai , China

- Sales :

Direct +86 (21) 6401-6692

Email amall@ameya360.com

QQ 800077892

Skype ameyasales1 ameyasales2

- Customer Service :

Email service@ameya360.com

- Partnership :

Tel +86 (21) 64016692-8333

Email mkt@ameya360.com