PRELIMINARY

PART NO. : HFJ12-1G01ER-L12RL

RoHS COMPLIANT

1X2 FASTJACK™ WITH 1000BASE-T MAGNETICS

COMPLIANT TO IEEE802.3ab STANDARDS

RoHS COMPLAINT

COMPATIBLE TO LEAD-FREE WAVE SOLDERING PROCESS FOR THROUGH HOLE COMPONENTS

OPERATING TEMPERATURE 0/70°C

Housing Material: Polyester, Black UL94V-0
Contacts: Phosphor Bronze 30µin Au plating over Ni
Leads: Matte Sn over Ni plating
Shield: Cu Alloy with Ni plating 40µin min
Durability: 1000 mating cycles
Dimensions: Inch [mm]
Tolerances: ±0.008 inch if not specified

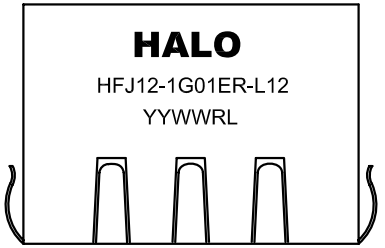

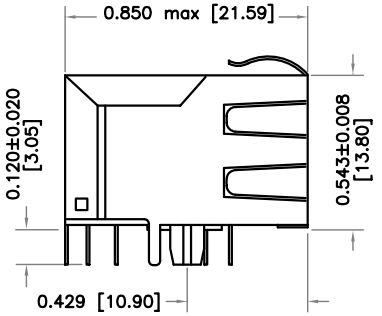

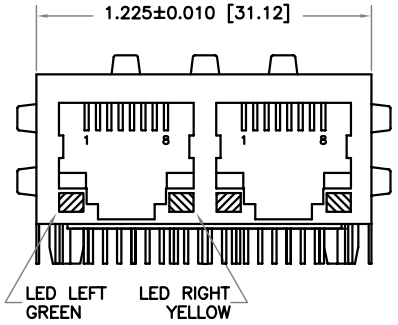

ELECTRICAL SPECIFICATIONS @25° C

TURNS RATIO	1:1±3%
OCL (100KHz,0.1V,8mA)	350µH min
INSERTION LOSS	
1-100MHz	-1.1dB max
RETURN LOSS	
1-40MHz	-18dB min
60MHz	-14dB min
80MHz	-12dB min
100MHz	-10dB min
CROSSTALK 1-100MHz	-35dB typ
CMR 0.1-30MHz	-50dB typ
30-60MHz	-40dB typ
60-100MHz	-35dB typ
ISOLATION	1,500Vrms

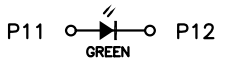

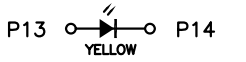

LED FORWARD VOLTAGE/
CURRENT: 2.1V/10mA typ

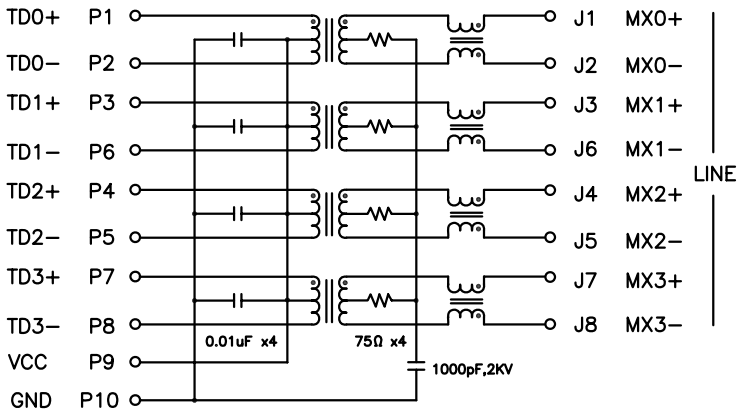

HALO/PBL	TITLE	FastJack™ 1x2	SIGNATURES	DATE	REV.	DESC.	DATE
	FOR	GIGABIT ETHERNET	DRAWN PETER LU	8/17/06	A		
	PART NO.	HFJ12-1G01ER-L12RL	CHECKED				
	SCALE	NONE PAGE 1 OF 2	APPROVED				
			FILE	HFJ121G01ER-L12RL.DWG			

CALIFORNIA, USA
KOWLOON, HONG KONG
SINGAPORE

PRELIMINARY

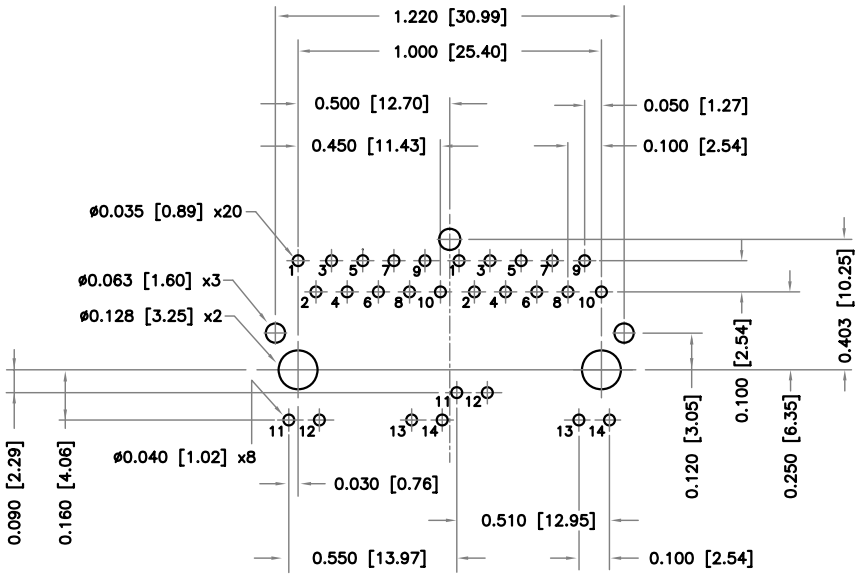

RECOMMENDED P.C. BOARD PATTERN (COMP. SIDE)
TOLERANCES ±0.002 [0.05] UNLESS SPECIFIED

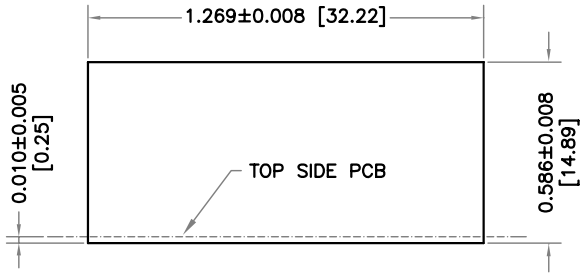

RECOMMENDED PANEL CUTOUT

HALO/PBL	TITLE	FastJack™ 1x2	SIGNATURES	DATE	REV.	DESC.	DATE
CALIFORNIA, USA KOWLOON, HONG KONG SINGAPORE	FOR	GIGABIT ETHERNET	DRAWN PETER LU	8/17/06	A		
	PART NO.	HFJ12-1G01ER-L12RL	CHECKED				
	SCALE	NONE PAGE 2 OF 2	APPROVED				
			FILE	HFJ121G01ER-L12RL.DWG			

AMEYA360
Components Supply Platform

Authorized Distribution Brand :

Website :

Welcome to visit www.ameya360.com

Contact Us :

- ### Address :

  401 Building No.5, JiuGe Business Center, Lane 2301, Yishan Rd
  Minhang District, Shanghai , China

- ### Sales :

  Direct +86 (21) 6401-6692

  Email amall@ameya360.com

  QQ 800077892

  Skype ameyasales1 ameyasales2

- ### Customer Service :

  Email service@ameya360.com

- ### Partnership :

  Tel +86 (21) 64016692-8333

  Email mkt@ameya360.com