| | | | | | | | | | | | | | | | | | | | | | | | | | |
|---|---|---|---|---|---|---|---|---|---|---|---|---|---|---|---|---|---|---|---|---|---|---|---|---|---|
| Produkt-Nr.: | | 1 | 2 | 3 | 4 | 5 | 6 | 7 | 8 | 9 | 0 | · | , | | | 5 | / | + | − | × | ÷ | = | * | # | ◊ |
| 825 ... End-Nr. | 000 | 001 | 002 | 003 | 004 | 005 | 006 | 007 | 008 | 009 | 010 | 011 | 012 | | | 015 | 016 | 017 | 018 | 019 | 020 | 021 | 022 | 023 | 024 |
| Produkt-Nr.: | | | | | ; | | | | | | | | | | | 10 | 11 | 12 | | | | | | | |
| 825 ... End-Nr. | | | | | 029 | | | | | | | | | | | 040 | 041 | 042 | | | | | | | |
| Produkt-Nr.: | | A | B | C | D | E | F | G | H | I | J | K | L | M | N | O | P | Q | R | S | T | U | V | W | X |
| 825 ... End-Nr. | | 051 | 052 | 053 | 054 | 055 | 056 | 057 | 058 | 059 | 060 | 061 | 062 | 063 | 064 | 065 | 066 | 067 | 068 | 069 | 070 | 071 | 072 | 073 | 074 |
| Produkt-Nr.: | Y | Z | | | | | | | | | | | | | | 00 | | | | | | | | | |
| 825 ... End-Nr. | 075 | 076 | | | | | | | | | | | | | | 090 | | | | | | | | | |
| Produkt-Nr.: | | | | | | | | | | | | | | | | | | | | | | | | | |
| 825 ... End-Nr. | | | | | | | | | | | | | | | | | | | | | | | | | |
| Produkt-Nr.: | | | | | | | | | | | | | | | | | | | | | | | | | |
| 825 ... End-Nr. | | | | | | | | | | | | | | | | | | | | | | | | | |
| Produkt-Nr.: | F13 | F14 | | | | | | | | | | | | | | | | | | | ← | | | | |
| 825 ... End-Nr. | 150 | 151 | | | | | | | | | | | | | | | | | | | 170 | | | | |
| Produkt-Nr.: | | | | | | | | | | | | | | | | | | | | | | | | CLR | |
| 825 ... End-Nr. | | | | | | | | | | | | | | | | | | | | | | | | 198 | |

Zeichen entsprechen etwa der Darstellung
Sign correspond nearly to representation

* Anmerkung: Die mit ◢ (ohne Zeichen) und ◥ (mit Zeichen) versehenen Ausführungen entsprechen dem Standardprogramm. Alle nicht so gekennzeichneten Zeichen und Farben sind nur auf Anfrage lieferbar!
Bei Bestellung von Tastenknöpfen ohne Zeichen bleibt die End-Nr. entsprechend der Tastenknopffarbe dieselbe.

All versions which are marked ◢ (with out sign) and ◥ (with sign) are according to our standard program. All symbols and colours which are not marked in that way are available on request only!
In case there are ordered buttons without symbol, the last 3 digits of the number remain unchanged which is in accordance with the number of the button's colour.

| | | |
|---|---|---|
| green white | grün weiß ◥ | 091 |
| yellow white | gelb weiß ◥ | 081 |
| red white | rot weiß ◥ | 071 |
| beige white | beige weiß ◥ | 061 |
| | | |
| brown white | braun weiß ◥ | 041 |
| grey white | grau weiß ◥ | 031 |
| darkgrey white | dunkelgrau weiß ◥ | 021 |
| anthracite white | anthrazit weiß ◥ | 011 |
| Key button Sign | Tastenknopf Zeichen | End-Nr. |

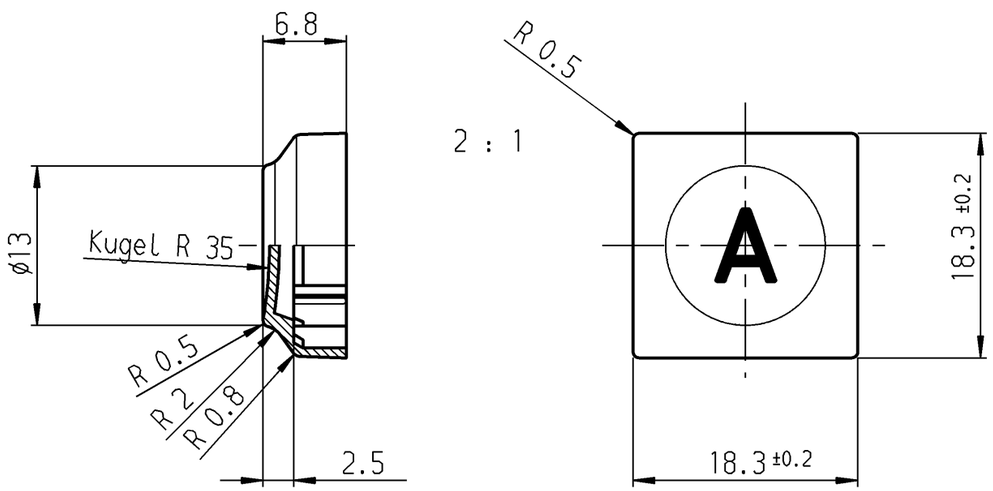


for system 6425.
für Baureihe 6425.

bei Änd. beachte F.Z.

| Allgemeintoleranzen/UNTOLERANCED DIMENSIONS | | | | | | | |
|---|---|---|---|---|---|---|---|
| Für Längen und Radien FOR LENGTHS AND RADII. ± | Abmaße in mm für Nennmaßbereich in mm ALL DIMENSIONS ARE IN MILLIMETRES | | | | | | |
| | bis/UP TO 6 | über/OVER 6 bis/UP TO 30 | über/OVER 30 | | | | |
| | 0.2 | | | | | | |
| d | 23037 | 26.10.94 | ws | i | | | |
| c | 22499 | 15.10.93 | ws | h | 28460 | 30.10.00 | Mut |
| b | 21328 | 12.02.92 | ws | g | 26276 | 29.06.98 | ws |
| a | 19504 | 01.08.89 | ws | f | 25911 | 09.03.98 | ws |
| II | 18990 | 10.11.88 | ws | e | 24148 | 26.06.96 | ws |
| Ausg. ISSUE | Änderung REVISION | gez. DRAWN BY | | Ausg. ISSUE | Änderung REVISION | gez. DRAWN BY | |

PROJECTION

Pause COPY

Blatt SHEET

Original DIN A3 | Maßstab SCALE 1:1

0 10 20 30 mm

gez./DRAWN BY 03.10.88 ws
gepr./CHECKED BY Sa

Ersatz für/REPLACEMENT OF
825 000 011 v.19.03.80

K

Zeichn./DRAWING NO. 825.000.011

Key button
Tastenknopf
1x1

MARQUARDT
Marquardt GmbH, D-78604 Rietheim-Weilheim

Schutzvermerk nach DIN 34 beachten
COPYRIGHT RESERVED

# AMEYA360
Components Supply Platform

Authorized Distribution Brand :

Website :

Welcome to visit www.ameya360.com

Contact Us :

- Address :

401 Building No.5, JiuGe Business Center, Lane 2301, Yishan Rd
Minhang District, Shanghai , China

- Sales :

Direct +86 (21) 6401-6692

Email amall@ameya360.com

QQ 800077892

Skype ameyasales1 ameyasales2

- Customer Service :

Email service@ameya360.com

- Partnership :

Tel +86 (21) 64016692-8333

Email mkt@ameya360.com