19-5735; Rev 3/11

# DS1100
# 5-Tap Economy Timing Element (Delay Line)

## GENERAL DESCRIPTION

The DS1100 series delay lines have five equally spaced taps providing delays from 4ns to 500ns. These devices are offered in surface-mount packages to save PCB area. Low cost and superior reliability over hybrid technology is achieved by the combination of a 100% silicon delay line and industry-standard µMAX and SO packaging. The DS1100 5-tap silicon delay line reproduces the input-logic state at the output after a fixed delay as specified by the extension of the part number after the dash. The DS1100 is designed to reproduce both leading and trailing edges with equal precision. Each tap can drive up to 10 74LS loads.

Maxim can customize standard products to meet special needs.

## FEATURES

- All-Silicon Timing Circuit
- Five Taps Equally Spaced
- 5V Operation
- Delays are Stable and Precise
- Both Leading- and Trailing-Edge Accuracy
- Improved Replacement for DS1000
- Low-Power CMOS
- TTL/CMOS-Compatible
- Vapor-Phase, IR, and Wave Solderable
- Custom Delays Available
- Fast-Turn Prototypes
- Delays Specified Over Both Commercial and Industrial Temperature Ranges

## PIN ASSIGNMENT

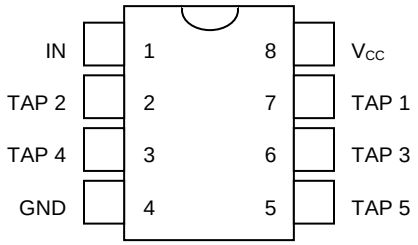


DS1100Z SO (150 mils)
DS1100U µMAX®

## PIN DESCRIPTION

| | |
|---|---|
| TAP 1 to TAP 5 | - TAP Output Number |
| $V_{CC}$ | - +5V |
| GND | - Ground |
| IN | - Input |

*µMAX is a registered trademark of Maxim Integrated Products, Inc.*

## ABSOLUTE MAXIMUM RATINGS

Voltage Range on Any Pin Relative to Ground ..... -0.5V to +6.0V
Short-Circuit Output Current ..... 50mA for 1s
Operating Temperature Range ..... -40°C to +85°C
Storage Temperature Range ..... -55°C to +125°C
Lead Temperature (soldering, 10s) ..... +300°C
Soldering Temperature (reflow)
Lead(Pb)-free ..... +260°C
Containing lead(Pb) ..... +240°C

*This is a stress rating only and functional operation of the device at these or any other conditions above those indicated in the operation sections of this specification is not implied. Exposure to absolute maximum rating conditions for extended periods of time may affect device reliability.*

## DC ELECTRICAL CHARACTERISTICS

($V_{CC}$ = 5.0V ±5%, $T_A$ = -40°C to +85°C, unless otherwise noted.)

| PARAMETER | SYMBOL | CONDITIONS | MIN | TYP | MAX | UNITS | NOTES |
|---|---|---|---|---|---|---|---|
| Supply Voltage | $V_{CC}$ | | 4.75 | 5.00 | 5.25 | V | 5 |
| High-Level Input Voltage | $V_{IH}$ | | 2.2 | | $V_{CC}$ + 0.3 | V | 5 |
| Low-Level Input Voltage | $V_{IL}$ | | -0.3 | | 0.8 | V | 5 |
| Input-Leakage Current | $I_I$ | $0.0V \le V_I \le V_{CC}$ | -1.0 | | 1.0 | µA | |
| Active Current | $I_{CC}$ | $V_{CC}$ = Max; Freq = 1MHz | | 30 | 50 | mA | 6, 8 |
| High-Level Output Current | $I_{OH}$ | $V_{CC}$ = Min; $V_{OH}$ = 4 | | | -1 | mA | |
| Low-Level Output Current | $I_{OL}$ | $V_{CC}$ = Min; $V_{OL}$ = 0.5 | 12 | | | mA | |

## AC ELECTRICAL CHARACTERISTICS

($V_{CC}$ = 5.0V ±5%, $T_A$ = -40°C to +85°C, unless otherwise noted.)

| PARAMETER | SYMBOL | CONDITIONS | MIN | TYP | MAX | UNITS | NOTES |
|---|---|---|---|---|---|---|---|
| Input Pulse Width | $t_{WI}$ | | 20% of Tap 5 $t_{PLH}$ | | | ns | 9 |
| Input-to-Tap Delay Tolerance (Delays ≤ 40ns) | $t_{PLH}$, $t_{PHL}$ | +25°C 5V | -2 | Table 1 | +2 | ns | 1, 3, 4, 7 |
| | | 0°C to +70°C | -3 | Table 1 | +3 | ns | 1, 2, 3, 4, 7 |
| | | -40°C to +85°C | -4 | Table 1 | +4 | ns | 1, 2, 3, 4, 7 |
| Input-to-Tap Delay Tolerance (Delays > 40ns) | $t_{PLH}$, $t_{PHL}$ | +25°C 5V | -5 | Table 1 | +5 | % | 1, 3, 4, 7 |
| | | 0°C to +70°C | -8 | Table 1 | +8 | % | 1, 2, 3, 4, 7 |
| | | -40°C to +85°C | -13 | Table 1 | +13 | % | 1, 2, 3, 4, 7 |
| Power-Up Time | $t_{PU}$ | | | | 200 | µs | |
| Input Period | Period | | $2(t_{WI})$ | | | ns | 9 |

## CAPACITANCE

($T_A$ = +25°C, unless otherwise noted.)

| PARAMETER | SYMBOL | CONDITIONS | MIN | TYP | MAX | UNITS | NOTES |
|---|---|---|---|---|---|---|---|
| Input Capacitance | $C_{IN}$ | | | 5 | 10 | pF | |

## NOTES:

1) Initial tolerances are ± with respect to the nominal value at +25°C and 5V for both leading and trailing edge.
2) Temperature and voltage tolerance is with respect to the nominal delay value over the stated temperature range, and a supply-voltage range of 4.75V to 5.25V.
3) All tap delays tend to vary unidirectionally with temperature or voltage changes. For example, if TAP1 slows down, all other taps also slow down; TAP3 can never be faster than TAP2.
4) Intermediate delay values are available on a custom basis. For further information, email the factory at custom.oscillators@maxim-ic.com.
5) All voltages are referenced to ground.
6) Measured with outputs open.
7) See *Test Conditions* section at the end of this data sheet.
8) Frequencies higher than 1MHz result in higher $I_{CC}$ values.
9) At or near maximum frequency the delay accuracy can vary and will be application sensitive (i.e., decoupling, layout).

## Figure 1. LOGIC DIAGRAM

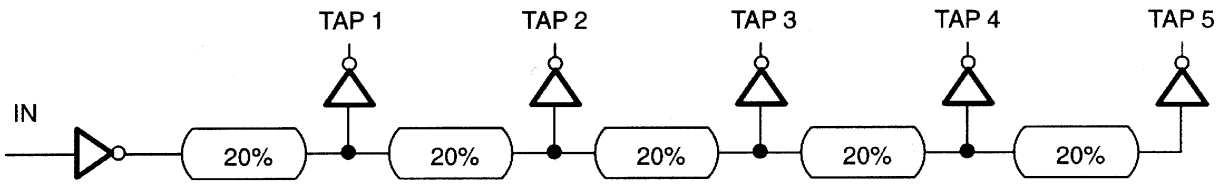


## Figure 2. TIMING DIAGRAM: SILICON DELAY LINE

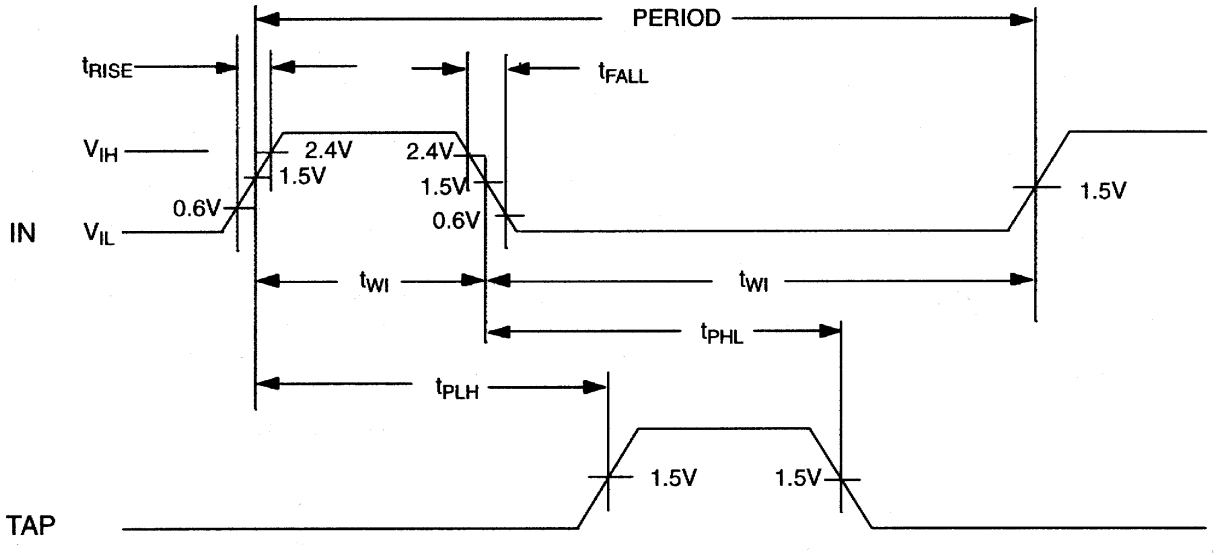

## TERMINOLOGY

**Period:** The time elapsed between the leading edge of the first pulse and the leading edge of the following pulse.

**$t_{WI}$ (Pulse Width):** The elapsed time on the pulse between the 1.5V point on the leading edge and the 1.5V point on the trailing edge, or the 1.5V point on the trailing edge and the 1.5V point on the leading edge.

**$t_{RISE}$ (Input Rise Time):** The elapsed time between the 20% and the 80% point on the leading edge of the input pulse.

**$t_{FALL}$ (Input Fall Time):** The elapsed time between the 80% and the 20% point on the trailing edge of the input pulse.

**$t_{PLH}$ (Time Delay, Rising):** The elapsed time between the 1.5V point on the leading edge of the input pulse and the 1.5V point on the leading edge of any tap output pulse.

**$t_{PHL}$ (Time Delay, Falling):** The elapsed time between the 1.5V point on the trailing edge of the input pulse and the 1.5V point on the trailing edge of any tap output pulse.

## TEST SETUP DESCRIPTION

Figure 3 illustrates the hardware configuration used for measuring the timing parameters on the DS1100. The input waveform is produced by a precision-pulse generator under software control. Time delays are measured by a time interval counter (20ps resolution) connected between the input and each tap. Each tap is selected and connected to the counter by a VHF switch control unit. All measurements are fully automated, with each instrument controlled by a central computer over an IEEE 488 bus.

## TEST CONDITIONS INPUT

| | |
|---|---|
| Ambient Temperature: | +25°C ±3°C |
| Supply Voltage ($V_{CC}$): | 5.0V ±0.1V |
| Input Pulse: | High = 3.0V ±0.1V |
| | Low = 0.0V ±0.1V |
| Source Impedance: | 50Ω max |
| Rise and Fall Time: | 3.0ns max (measured between 0.6V and 2.4V) |
| Pulse Width: | 500ns (1µs for -500 version) |
| Period: | 1µs (2µs for -500 version) |

## OUTPUT:

Each output is loaded with the equivalent of one 74F04 input gate. Delay is measured at the 1.5V level on the rising and falling edge.

**Note: Above conditions are for test only and do not restrict the operation of the device under other data sheet conditions.**

## Figure 3. TEST CIRCUIT

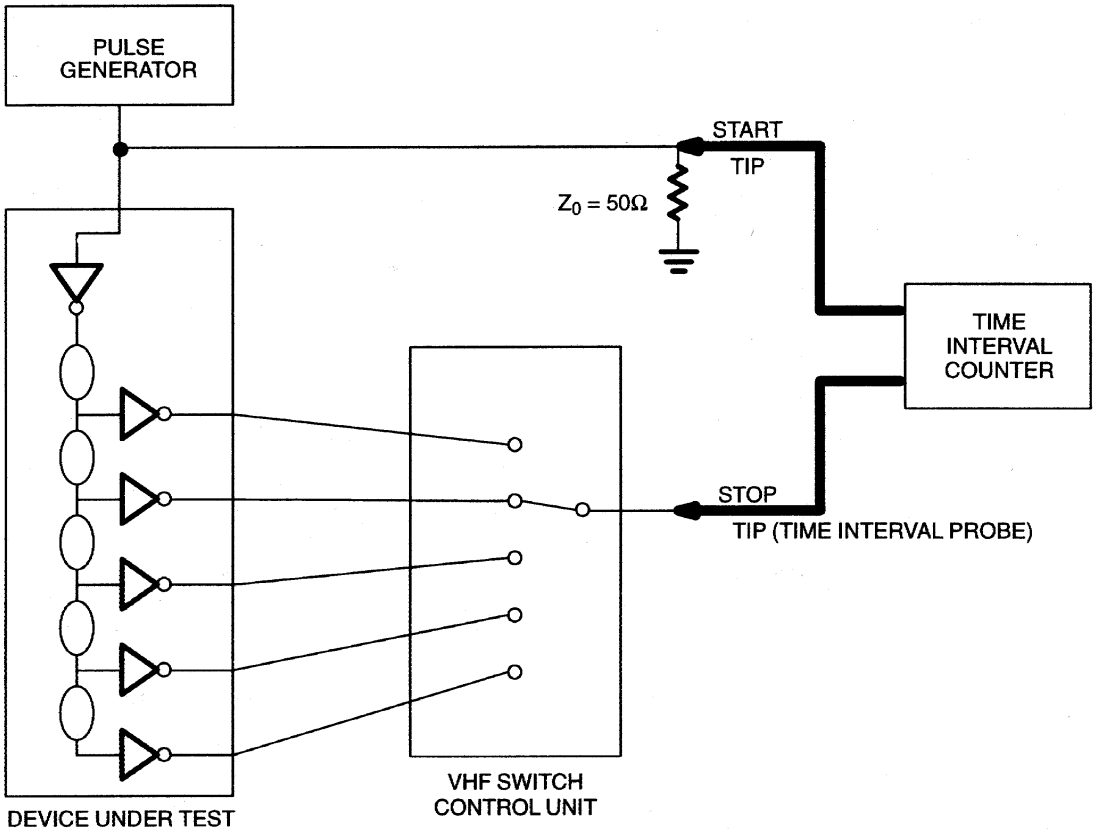


## Table 1. DS1100 PART NUMBER DELAY

| PART | NOMINAL DELAYS (ns) | | | | |
|---|---|---|---|---|---|
| DS1100-xxx | TAP 1 | TAP 2 | TAP 3 | TAP 4 | TAP 5 |
| -20 | 4 | 8 | 12 | 16 | 20 |
| -25 | 5 | 10 | 15 | 20 | 25 |
| -30 | 6 | 12 | 18 | 24 | 30 |
| -35 | 7 | 14 | 21 | 28 | 35 |
| -40 | 8 | 16 | 24 | 32 | 40 |
| -45 | 9 | 18 | 27 | 36 | 45 |
| -50 | 10 | 20 | 30 | 40 | 50 |
| -60 | 12 | 24 | 36 | 48 | 60 |
| -75 | 15 | 30 | 45 | 60 | 75 |
| -100 | 20 | 40 | 60 | 80 | 100 |
| -125 | 25 | 50 | 75 | 100 | 125 |
| -150 | 30 | 60 | 90 | 120 | 150 |
| -175 | 35 | 70 | 105 | 140 | 175 |
| -200 | 40 | 80 | 120 | 160 | 200 |
| -250 | 50 | 100 | 150 | 200 | 250 |
| -300 | 60 | 120 | 180 | 240 | 300 |
| -500 | 100 | 200 | 300 | 400 | 500 |

## ORDERING INFORMATION

| PART | TEMP RANGE | PIN-PACKAGE |
|---|---|---|
| DS1100Z-xxx | -40°C to +85°C | 8 SO |
| DS1100Z-xxx/T&R | -40°C to +85°C | 8 SO |
| DS1100Z-xxx+ | -40°C to +85°C | 8 SO |
| DS1100Z-xxx+T | -40°C to +85°C | 8 SO |
| DS1100U-xxx | -40°C to +85°C | 8 μMAX |
| DS1100U-xxx/T&R | -40°C to +85°C | 8 μMAX |
| DS1100U-xxx+ | -40°C to +85°C | 8 μMAX |
| DS1100U-xxx+T | -40°C to +85°C | 8 μMAX |

xxx *Denotes total time delay (ns) (see Table 1).*
*+Denotes a lead(Pb)-free/RoHS-compliant package.*
*T&R and T = Tape and reel.*

## PACKAGE INFORMATION

For the latest package outline information and land patterns (footprints), go to **www.maxim-ic.com/packages**. Note that a "+", "#", or "-" in the package code indicates RoHS status only. Package drawings may show a different suffix character, but the drawing pertains to the package regardless of RoHS status.

| PACKAGE TYPE | PACKAGE CODE | OUTLINE NO. | LAND PATTERN NO. |
|---|---|---|---|
| 8 SO (150 mils) | S8+4 | **21-0041** | **90-0096** |
| 8 μMAX | U8+1 | **21-0036** | **90-0092** |

## REVISION HISTORY

| REVISION DATE | DESCRIPTION | PAGES CHANGED |
|---|---|---|
| 3/11 | Removed the DIP package from *General Description*, *Pin Assignment*, and *Ordering Information* (no longer available); changed µSOP package type to µMAX; updated the *Absolute Maximum Ratings* section; added the customer support email address to the electrical characteristics Note 4; added the *Ordering Information* and *Package Information* tables | 1–6 |



*Maxim cannot assume responsibility for use of any circuitry other than circuitry entirely embodied in a Maxim product. No circuit patent licenses are implied. Maxim reserves the right to change the circuitry and specifications without notice at any time.*

***Maxim Integrated Products, 120 San Gabriel Drive, Sunnyvale, CA 94086 408-737-7600***

© 2011 Maxim Integrated Products Maxim is a registered trademark of Maxim Integrated Products.

# AMEYA360
Components Supply Platform

## Authorized Distribution Brand :

## Website :

Welcome to visit www.ameya360.com

## Contact Us :

- ### Address :

  401 Building No.5, JiuGe Business Center, Lane 2301, Yishan Rd
  Minhang District, Shanghai , China

- ### Sales :

  Direct +86 (21) 6401-6692

  Email amall@ameya360.com

  QQ 800077892

  Skype ameyasales1 ameyasales2

- ### Customer Service :

  Email service@ameya360.com

- ### Partnership :

  Tel +86 (21) 64016692-8333

  Email mkt@ameya360.com