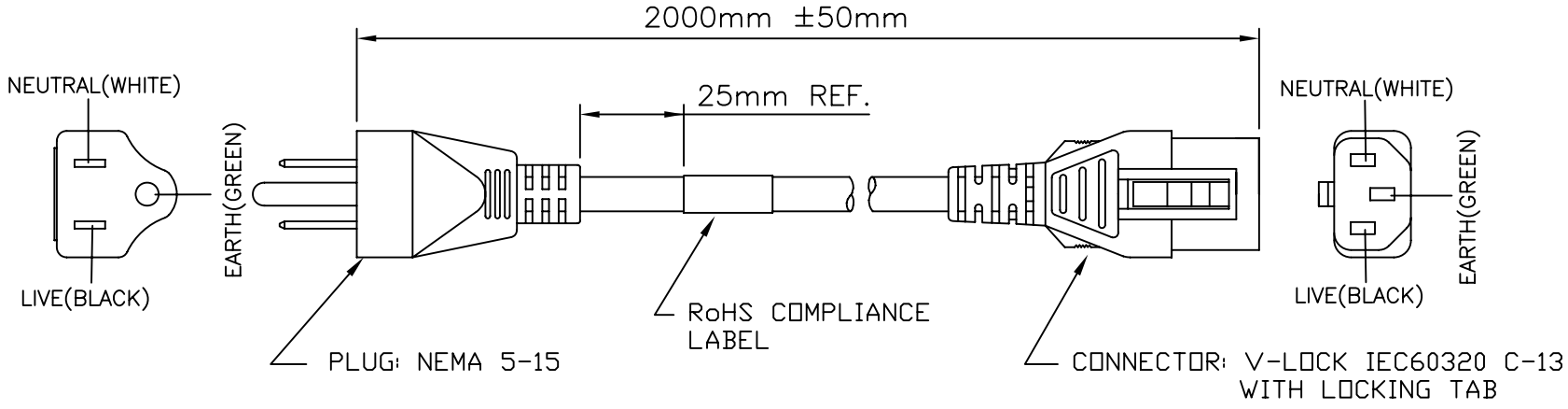

VOLEX RESERVES THE RIGHT TO ALTER NON-CRITICAL DIMENSIONS WITHOUT NOTICE.

PACKAGING: FOLD & TIE

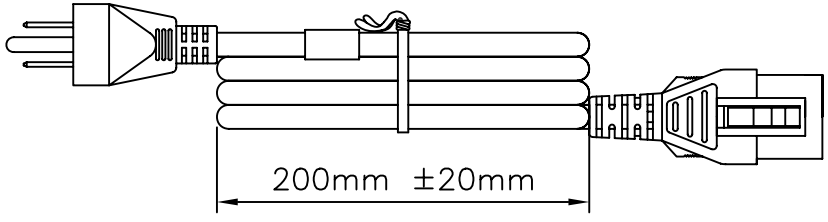

NOTES

1) CORDAGE: 18/3 SJT, 60°C, BLACK, LEAD FREE
2) APPROVALS: UL
3) RATING: 10 AMP/125 VOLTS
4) FLAME RATING : FT2
5) PACKAGING: 60 PIECES PER CARTON
6) THIS ITEM IS A CORD ONLY. NO C-14 INLET INCLUDED.

REV	DESCRIPTION	DATE
1	C.U.D - NEW RELEASE	6/21/07

Volex
CUD
FORM IN71-07 REV.A

- ☒ Indianapolis, IN
- ☐ Conover, N.C.
- ☐ Freemont, CA
- ☐ Aguascalientes, MX
- ☐ Tijuana, Mexico
- ☐ Hermosillo, MX
- ☐ Clinton, AR
- ☐ Kanata, Canada

Proprietary Notice:

This document is the property of Volex Incorporated. The information contained herein is not to be disclosed to anyone without the express written consent of Volex Inc.

MATERIAL:
PLUG: PVC-BLACK
CONNECTOR: PVC-BLACK
JACKET: PVC-BLACK

FINISH:
JACKET: SMOOTH

SCALE: NOT TO SCALE
ECO: N/A

TOLERANCE UNLESS OTHERWISE SPECIFIED
.XXX ± .005
.XX ± .02
.X ± .03
FRACT. ± 1/32
ANGULAR ± 1/2°

ITEM DESCRIPTION
CORDSET - NORTH AMERICAN V-LOCK DETACHABLE POWER SUPPLY CORD (2M)

APPROVED	DRAWN BY	DATE:
STC	STC	6/21/07

PART NO.
VL-0124-05-200

AMEYA360
Components Supply Platform

Authorized Distribution Brand :

Website :

Welcome to visit www.ameya360.com

Contact Us :

- ### Address :

  401 Building No.5, JiuGe Business Center, Lane 2301, Yishan Rd
  Minhang District, Shanghai , China

- ### Sales :

  Direct +86 (21) 6401-6692

  Email amall@ameya360.com

  QQ 800077892

  Skype ameyasales1 ameyasales2

- ### Customer Service :

  Email service@ameya360.com

- ### Partnership :

  Tel +86 (21) 64016692-8333

  Email mkt@ameya360.com