# 5-1368336-3 Product Details

Live Product Chat

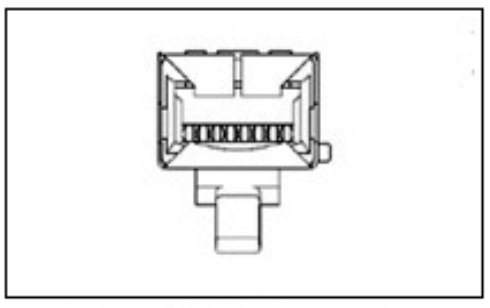

**5-1368336-3**

TE Part Number: 5-1368336-3

Active

Add to Part List

## Modular Plugs and Accessories

Always EU RoHS/ELV Compliant (Statement of Compliance)

**Product Highlights:**

- Plug
- Number of Positions = 6
- Shielded
- 6 Contacts Loaded
- Cable Style = Round Solid

View all Features | Find Similar Products

### Quick Links

- Check Pricing & Availability
- Search for Tooling
- Product Feature Selector
- Contact Us About This Product
- Request Samples NEW!

## Documentation & Additional Information

**Product Drawings:**

- MODULAR PLUG ASSEMBLY, 6 POSITION, LONG BODY, SHIELD... (PDF, English)

**Catalog Pages/Data Sheets:**

- None Available

**Product Specifications:**

- None Available

**Application Specifications:**

- None Available

**Instruction Sheets:**

- None Available

**CAD Files:**

- None Available

List all Documents

**Additional Information:**

- Product Line Information

**Related Products:**

- Tooling

## Product Features (Please use the Product Drawing for all design activity)

**Product Type Features:**

- Product Type = Plug
- Number of Positions = 6
- Shielded = Yes
- Number of Contacts Loaded = 6
- Cable Style = Round Solid
- Performance Category = Cat 3
- Latch Style = Standard
- Keyed = No
- Small Conductor = Yes
- Qty./Box = 100
- Shield Material = Copper Alloy

**Termination Related Features:**

- Solder Tail Contact Plating = Gold Flash over Nickel

**Body Related Features:**

- Conductor O.D. (mm [in]) = 0.80 – 1.00 [0.031 – 0.039]
- Shield Plating = Nickel

**Contact Related Features:**

- Contact Material = Phosphor Bronze
- Contact Mating Area Plating Material = Gold (50) over Nickel

**Housing Related Features:**

- Housing Material = Polycarbonate

**Industry Standards:**

- RoHS/ELV Compliance = RoHS compliant, ELV compliant
- Lead Free Solder Processes = Not relevant for lead free process
- RoHS/ELV Compliance History = Always was RoHS compliant

**Packaging Related Features:**

- Packaging Method = Carton

**Other:**

- Brand = AMP


© 2008 Tyco Electronics Corporation All Rights Reserved

# AMEYA360
Components Supply Platform

## Authorized Distribution Brand :

## Website :

Welcome to visit www.ameya360.com

## Contact Us :


- **Address :**

  401 Building No.5, JiuGe Business Center, Lane 2301, Yishan Rd
  Minhang District, Shanghai , China

- **Sales :**

  Direct +86 (21) 6401-6692

  Email amall@ameya360.com

  QQ 800077892

  Skype ameyasales1 ameyasales2

- **Customer Service :**

  Email service@ameya360.com

- **Partnership :**

  Tel +86 (21) 64016692-8333

  Email mkt@ameya360.com