FAIRCHILD SEMICONDUCTOR®

November 2013

FQP10N20C / FQPF10N20C

N-Channel QFET® MOSFET

200 V, 9.5 A, 360 mΩ

Features

- 9.5 A, 200 V, $R_{DS(on)}$ = 360 mΩ (Max.) @ V_{GS} = 10 V, I_D = 4.75 A
- Low Gate Charge (Typ. 20 nC)
- Low Crss (Typ. 40.5 pF)
- 100% Avalanche Tested

Description

This N-Channel enhancement mode power MOSFET is produced using Fairchild Semiconductor's proprietary planar stripe and DMOS technology. This advanced MOSFET technology has been especially tailored to reduce on-state resistance, and to provide superior switching performance and high avalanche energy strength. These devices are suitable for switched mode power supplies, active power factor correction (PFC), and electronic lamp ballasts.

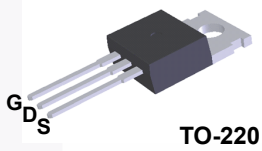

TO-220

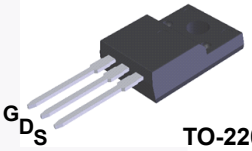

TO-220F

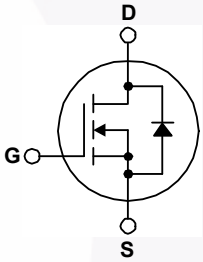

MOSFET Maximum Ratings T_C = 25°C unless otherwise noted.

Symbol	Parameter		FQP10N20C	FQPF10N20C	Unit
V_{DSS}	Drain to Source Voltage		200		V
I_D	Drain Current	-Continuous (T_C = 25°C)	9.5	9.5 *	A
		-Continuous (T_C = 100°C)	6.0	6.0 *	A
I_{DM}	Drain Current	- Pulsed (Note 1)	38	38 *	A
V_{GSS}	Gate to Source Voltage		± 30		V
E_{AS}	Single Pulsed Avalanche Energy	(Note 2)	210		mJ
I_{AR}	Avalanche Current	(Note 1)	9.5		A
E_{AR}	Repetitive Avalanche Energy	(Note 1)	7.2		mJ
dv/dt	Peak Diode Recovery dv/dt	(Note 3)	5.5		V/ns
P_D	Power Dissipation	(T_C = 25°C)	72	38	W
		- Derate above 25°C	0.57	0.3	W/°C
T_J, T_{STG}	Operating and Storage Temperature Range		-55 to +150		°C
T_L	Maximum Lead Temperature for Soldering Purpose, 1/8" from Case for 5 Seconds		300		°C

*Drain current limited by maximum junction temperature

Thermal Characteristics

Symbol	Parameter	FQP10N20C	FQPF10N20C	Unit
$R_{\theta JC}$	Thermal Resistance, Junction to Case, Max	1.74	3.33	°C/W
$R_{\theta JA}$	Thermal Resistance, Junction to Ambient, Max	62.5	62.5	°C/W

©2003 Fairchild Semiconductor Corporation

Package Marking and Ordering Information

Device Marking	Device	Package	Reel Size	Tape Width	Quantity
FQP10N20C	FQP10N20C	TO-220	Tube	N/A	50 units
FQPF10N20C	FQPF10N20C	TO-220F	Tube	N/A	50 units

Electrical Characteristics T_C = 25°C unless otherwise noted.

Symbol	Parameter	Test Conditions	Min	Typ	Max	Unit
Off Characteristics						
BV_{DSS}	Drain-Source Breakdown Voltage	V_{GS} = 0 V, I_D = 250 μA	200	--	--	V
ΔBV_{DSS} / ΔT_J	Breakdown Voltage Temperature Coefficient	I_D = 250 μA, Referenced to 25°C	--	0.28	--	V/°C
I_{DSS}	Zero Gate Voltage Drain Current	V_{DS} = 200 V, V_{GS} = 0 V	--	--	10	μA
		V_{DS} = 160 V, T_C = 125°C	--	--	100	μA
I_{GSSF}	Gate-Body Leakage Current, Forward	V_{GS} = 30 V, V_{DS} = 0 V	--	--	100	nA
I_{GSSR}	Gate-Body Leakage Current, Reverse	V_{GS} = -30 V, V_{DS} = 0 V	--	--	-100	nA
On Characteristics						
$V_{GS(th)}$	Gate Threshold Voltage	V_{DS} = V_{GS}, I_D = 250 μA	2.0	--	4.0	V
$R_{DS(on)}$	Static Drain-Source On-Resistance	V_{GS} = 10 V, I_D = 4.75 A	--	0.29	0.36	Ω
g_{FS}	Forward Transconductance	V_{DS} = 40 V, I_D = 4.75 A	--	5.5	--	S
Dynamic Characteristics						
C_{iss}	Input Capacitance	V_{DS} = 25 V, V_{GS} = 0 V, f = 1.0 MHz	--	395	510	pF
C_{oss}	Output Capacitance		--	97	125	pF
C_{rss}	Reverse Transfer Capacitance		--	40.5	53	pF
Switching Characteristics						
$t_{d(on)}$	Turn-On Delay Time	V_{DD} = 100 V, I_D = 9.5 A, R_G = 25 Ω (Note 4)	--	11	30	ns
t_r	Turn-On Rise Time		--	92	190	ns
$t_{d(off)}$	Turn-Off Delay Time		--	70	150	ns
t_f	Turn-Off Fall Time		--	72	160	ns
Q_g	Total Gate Charge	V_{DS} = 160 V, I_D = 9.5 A, V_{GS} = 10 V (Note 4)	--	20	26	nC
Q_{gs}	Gate-Source Charge		--	3.1	--	nC
Q_{gd}	Gate-Drain Charge		--	10.5	--	nC
Drain-Source Diode Characteristics and Maximum Ratings						
I_S	Maximum Continuous Drain-Source Diode Forward Current		--	--	9.5	A
I_{SM}	Maximum Pulsed Drain-Source Diode Forward Current		--	--	38	A
V_{SD}	Drain-Source Diode Forward Voltage	V_{GS} = 0 V, I_S = 9.5 A	--	--	1.5	V
t_{rr}	Reverse Recovery Time	V_{GS} = 0 V, I_S = 9.5 A, dI_F / dt = 100 A/μs	--	158	--	ns
Q_{rr}	Reverse Recovery Charge		--	0.97	--	μC

Notes:

1. Repetitive Rating : Pulse width limited by maximum junction temperature.
2. L = 3.5 mH, I_{AS} = 9.5 A, V_{DD} = 50 V, R_G = 25 Ω, starting T_J = 25°C.
3. $I_{SD} \leq$ 9.5 A, di/dt $\leq$ 300 A/μs, $V_{DD} \leq BV_{DSS}$, starting T_J = 25°C.
4. Essentially independent of operating temperature.

Typical Characteristics

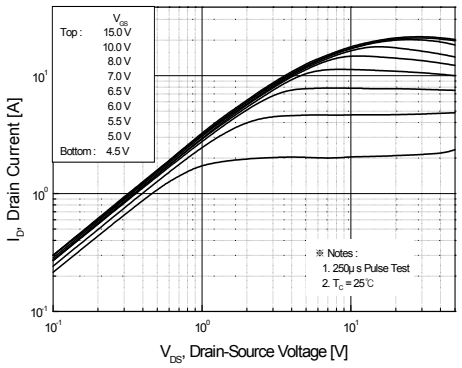

Figure 1. On-Region Characteristics

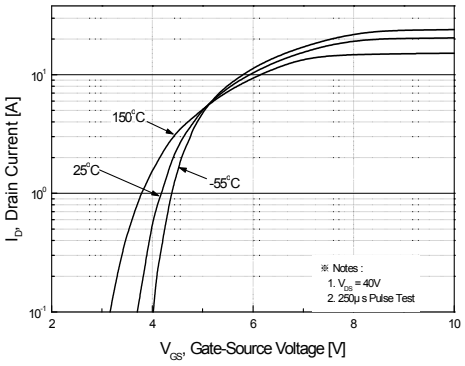

Figure 2. Transfer Characteristics

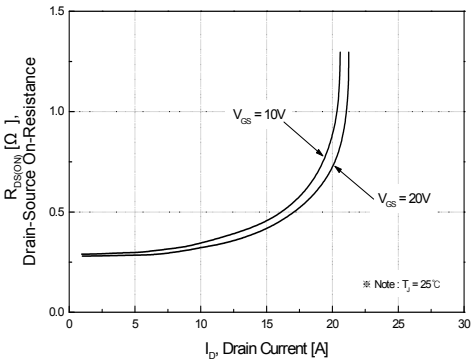

Figure 3. On-Resistance Variation vs Drain Current and Gate Voltage

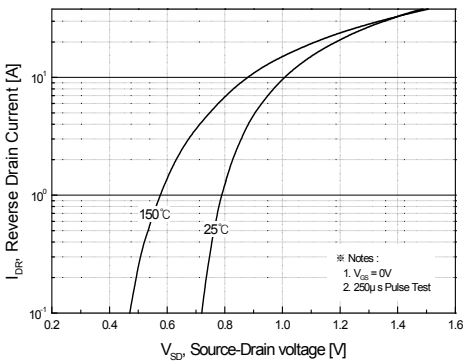

Figure 4. Body Diode Forward Voltage Variation with Source Current and Temperature

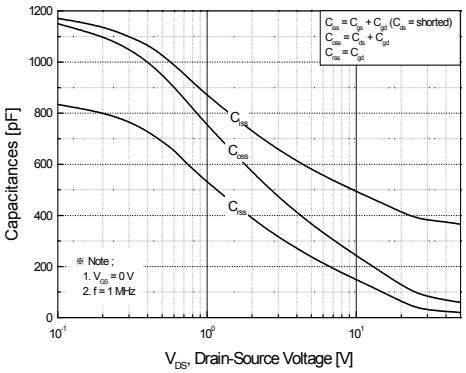

Figure 5. Capacitance Characteristics

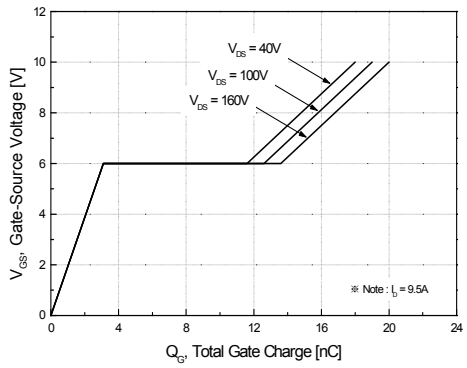

Figure 6. Gate Charge Characteristics

Typical Characteristics (Continued)

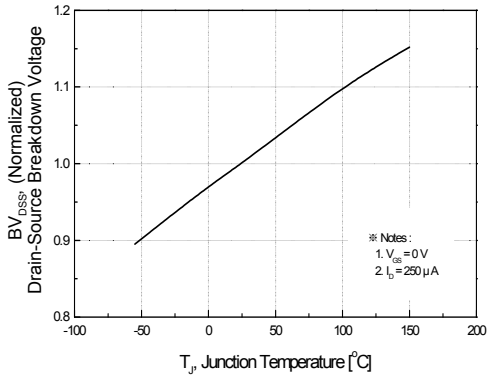

Figure 7. Breakdown Voltage Variation vs Temperature

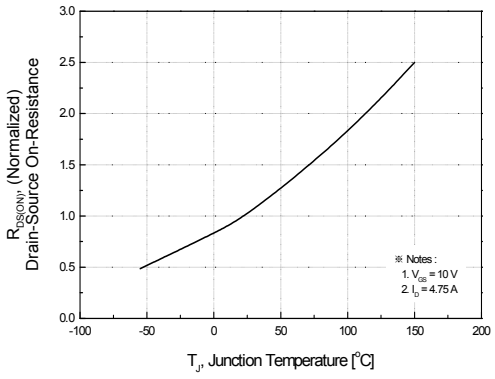

Figure 8. On-Resistance Variation vs Temperature

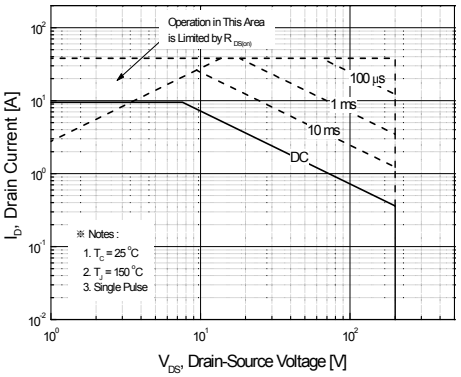

Figure 9-1. Maximum Safe Operating Area for FQP10N20C

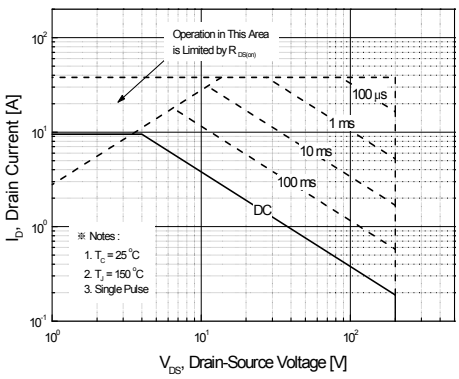

Figure 9-2. Maximum Safe Operating Area for FQPF10N20C

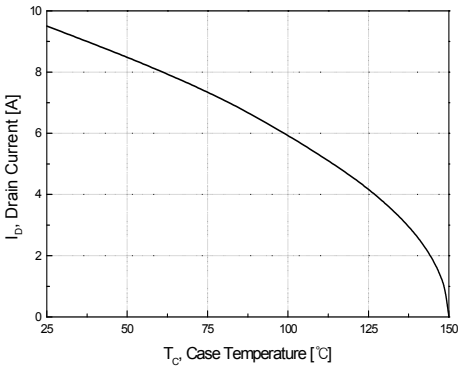

Figure 10. Maximum Drain Current vs Case Temperature

Typical Characteristics (Continued)

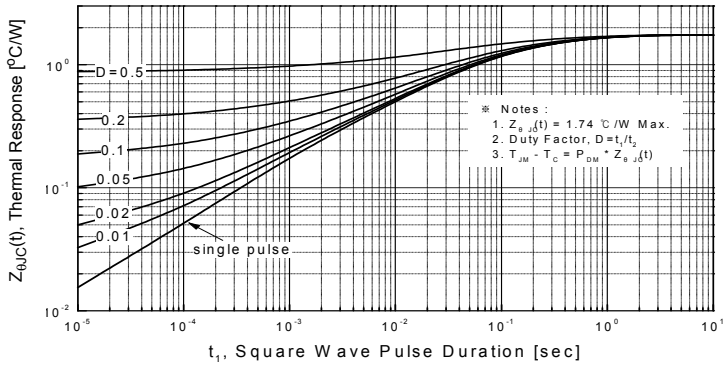

Figure 11-1. Transient Thermal Response Curve for FQP10N20C

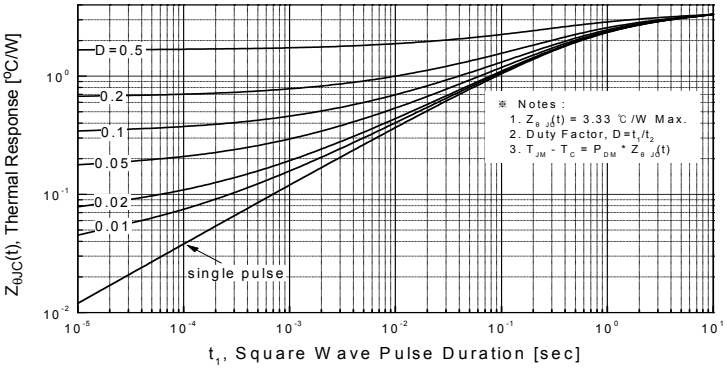

Figure 11-2. Transient Thermal Response Curve for FQPF10N20C

Figure 12. Gate Charge Test Circuit & Waveform

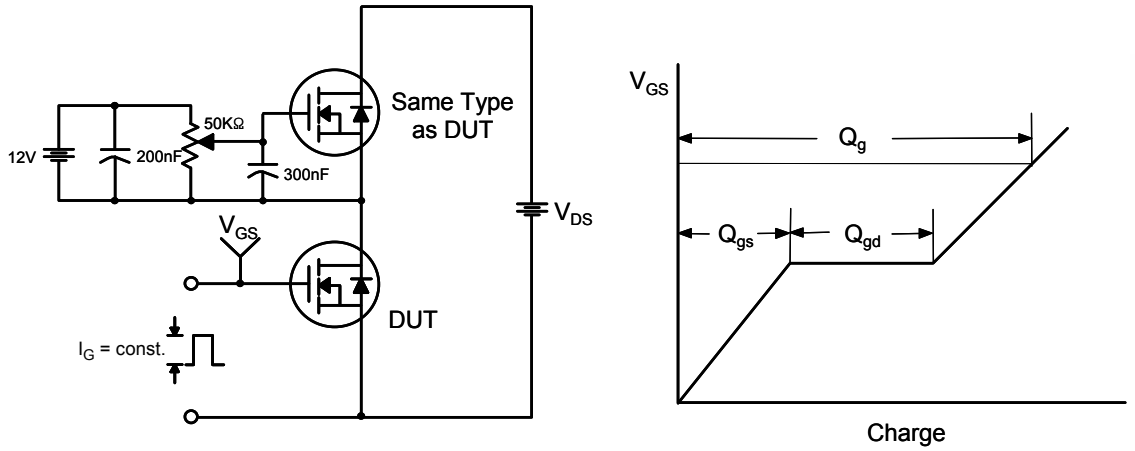

Figure 13. Resistive Switching Test Circuit & Waveforms

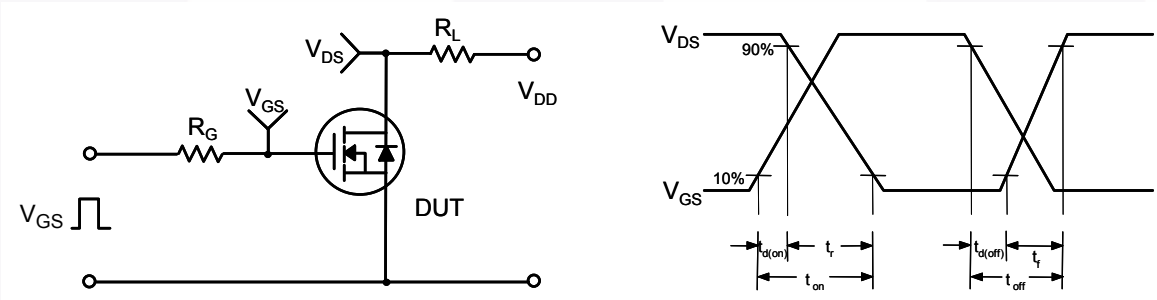

Figure 14. Unclamped Inductive Switching Test Circuit & Waveforms

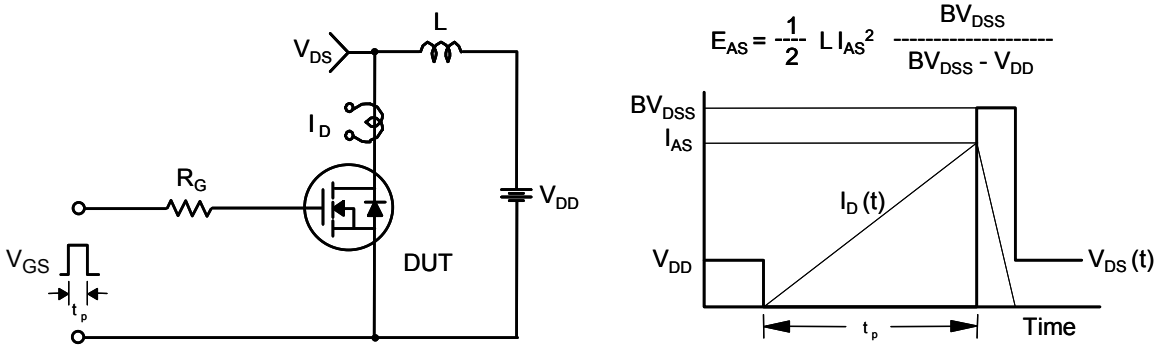

Figure 15. Peak Diode Recovery dv/dt Test Circuit & Waveforms

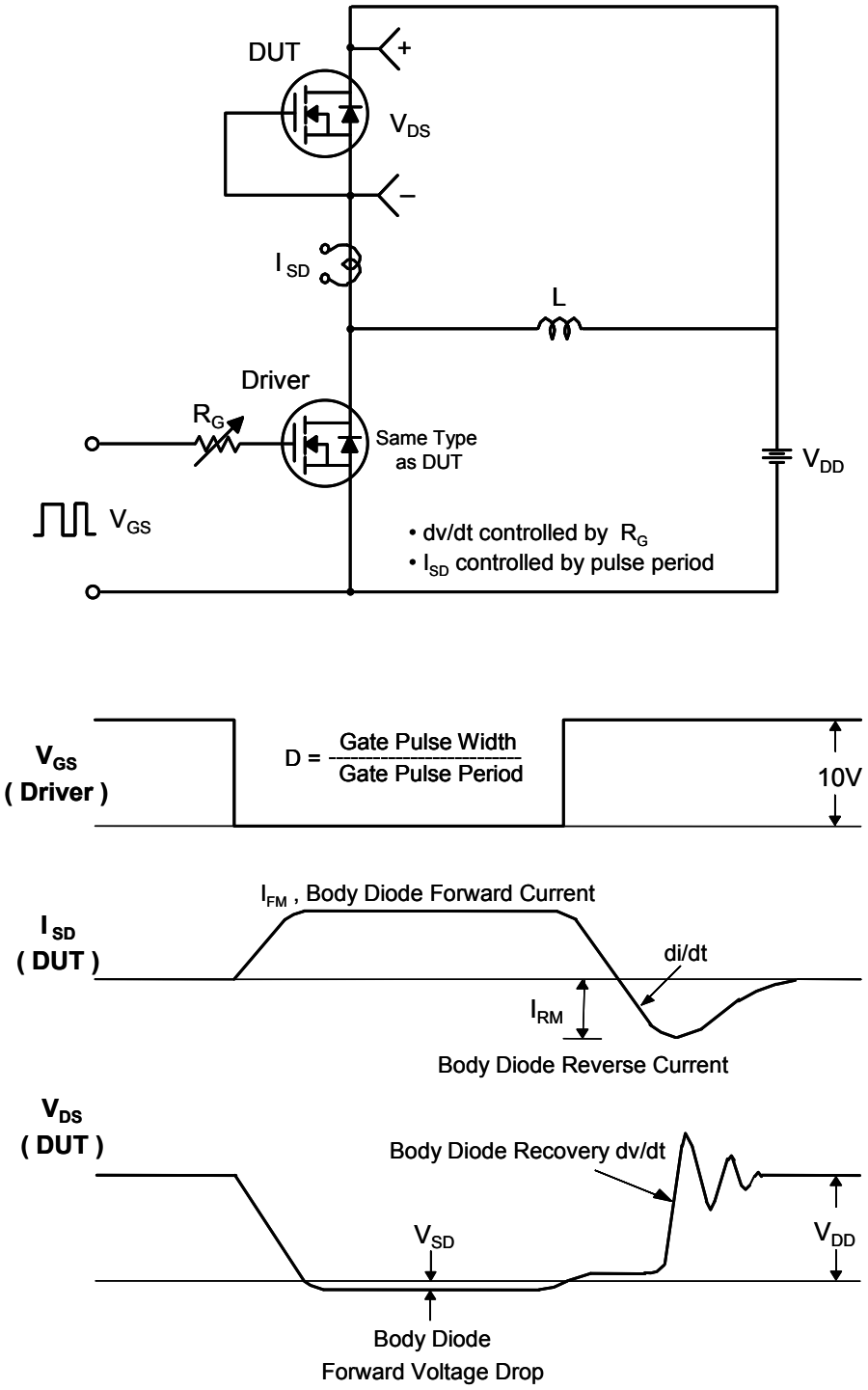

Mechanical Dimensions

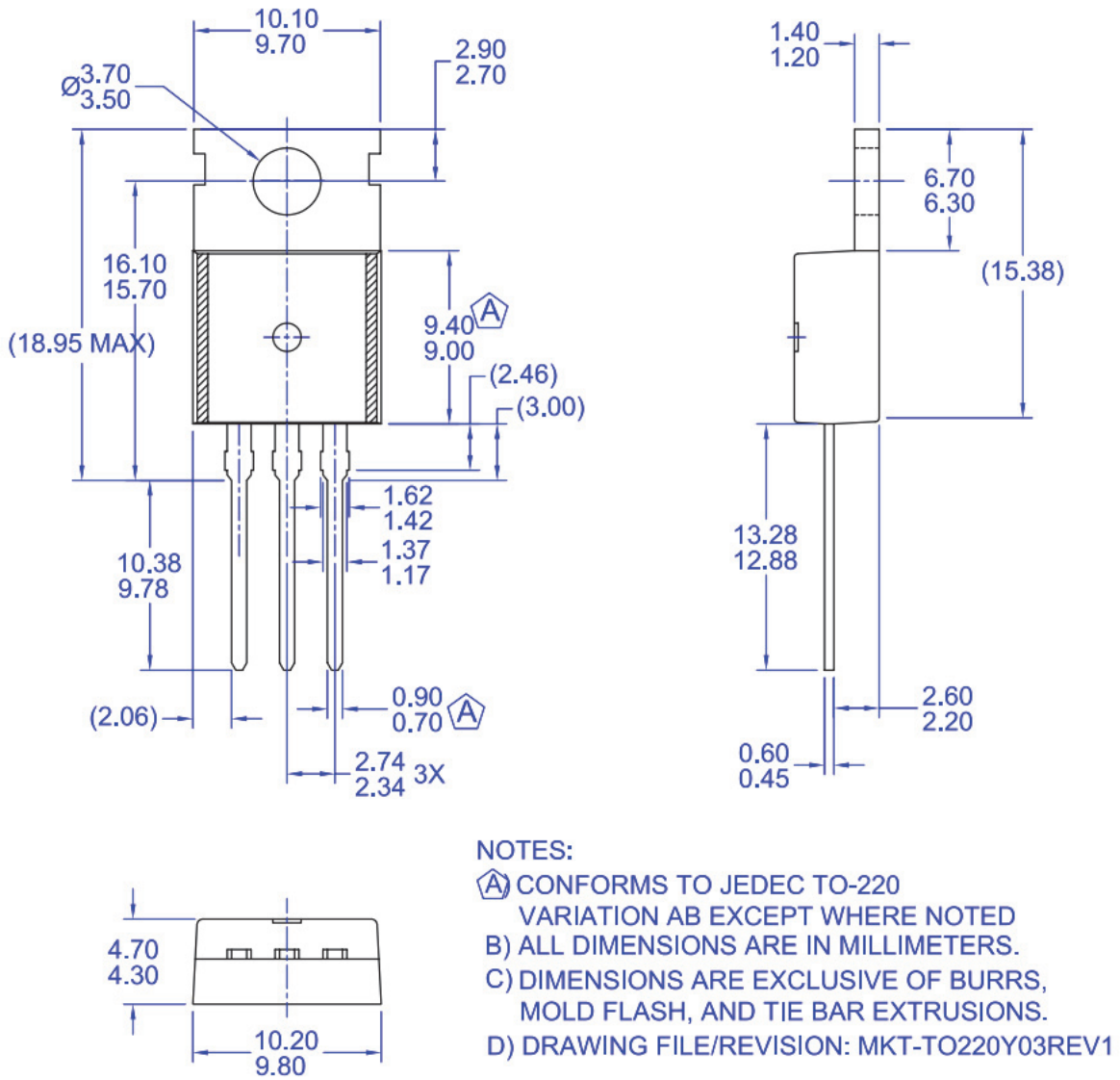

Figure 16. TO220, Molded, 3-Lead, Jedec Variation AB

Package drawings are provided as a service to customers considering Fairchild components. Drawings may change in any manner without notice. Please note the revision and/or date on the drawing and contact a Fairchild Semiconductor representative to verify or obtain the most recent revision. Package specifications do not expand the terms of Fairchild's worldwide terms and conditions, specifically the warranty therein, which covers Fairchild products.

Always visit Fairchild Semiconductor's online packaging area for the most recent package drawings:

http://www.fairchildsemi.com/package/packageDetails.html?id=PN_TO220-003

Mechanical Dimensions

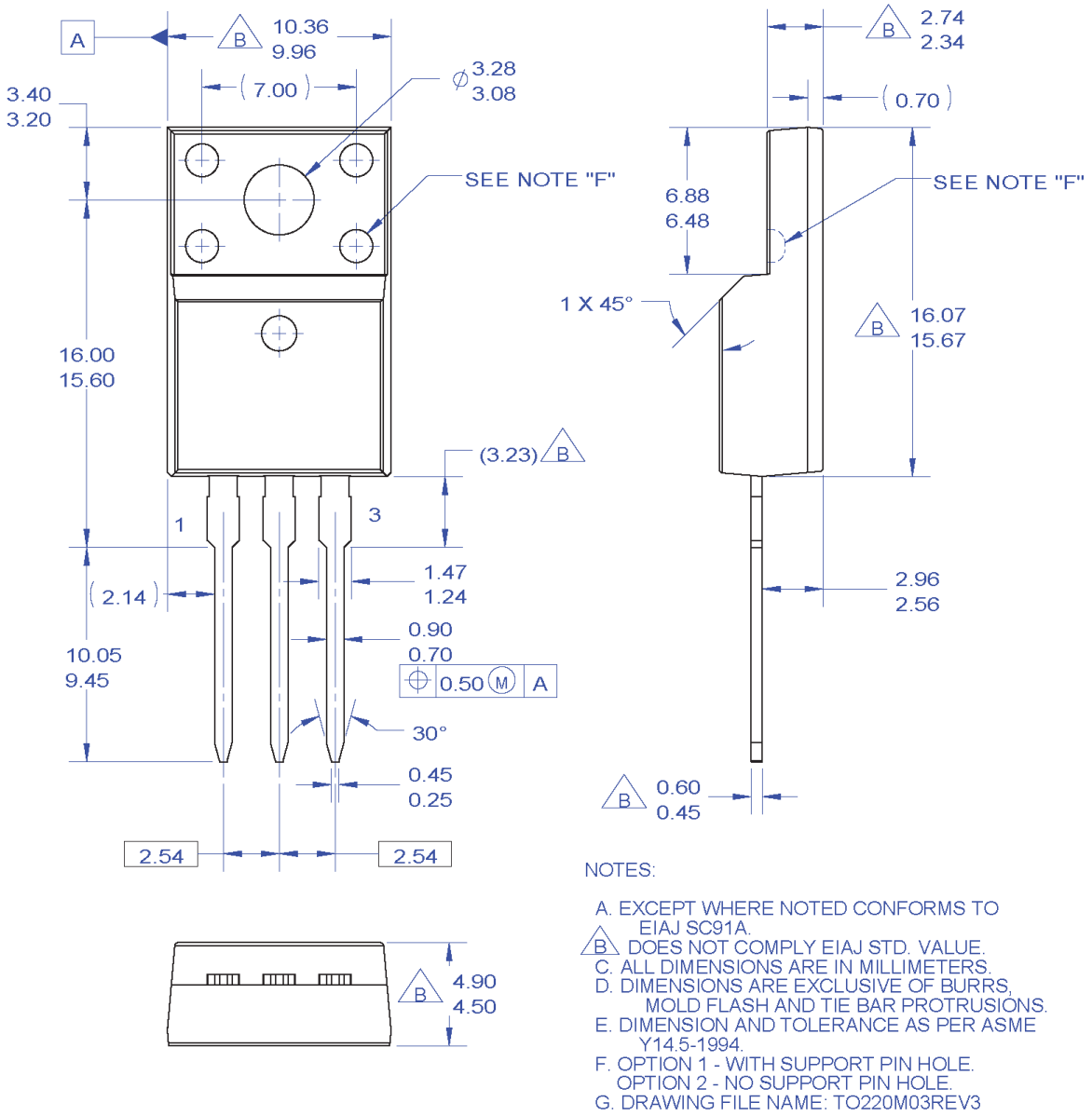

Figure 17. TO220, Molded, 3-Lead, Full Pack, EIAJ SC91, Straight Lead

Package drawings are provided as a service to customers considering Fairchild components. Drawings may change in any manner without notice. Please note the revision and/or date on the drawing and contact a Fairchild Semiconductor representative to verify or obtain the most recent revision. Package specifications do not expand the terms of Fairchild's worldwide terms and conditions, specifically the warranty therein, which covers Fairchild products.

Always visit Fairchild Semiconductor's online packaging area for the most recent package drawings:

http://www.fairchildsemi.com/package/packageDetails.html?id=PN_TF220-003

FAIRCHILD SEMICONDUCTOR®

TRADEMARKS

The following includes registered and unregistered trademarks and service marks, owned by Fairchild Semiconductor and/or its global subsidiaries, and is not intended to be an exhaustive list of all such trademarks.

AccuPower™
AX-CAP®*
BitSiC™
Build it Now™
CorePLUS™
CorePOWER™
CROSSVOLT™
CTL™
Current Transfer Logic™
DEUXPEED®
Dual Cool™
EcoSPARK®
EfficentMax™
ESBC™
F®
Fairchild®
Fairchild Semiconductor®
FACT Quiet Series™
FACT®
FAST®
FastvCore™
FETBench™
FPS™
F-PFS™
FRFET®
Global Power Resource℠
GreenBridge™
Green FPS™
Green FPS™ e-Series™
G*max*™
GTO™
IntelliMAX™
ISOPLANAR™
Marking Small Speakers Sound Louder and Better™
MegaBuck™
MICROCOUPLER™
MicroFET™
MicroPak™
MicroPak2™
MillerDrive™
MotionMax™
mWSaver®
OptoHiT™
OPTOLOGIC®
OPTOPLANAR®
®
PowerTrench®
PowerXS™
Programmable Active Droop™
QFET®
QS™
Quiet Series™
RapidConfigure™
™
Saving our world, 1mW/W/kW at a time™
SignalWise™
SmartMax™
SMART START™
Solutions for Your Success™
SPM®
STEALTH™
SuperFET®
SuperSOT™-3
SuperSOT™-6
SuperSOT™-8
SupreMOS®
SyncFET™
Sync-Lock™
SYSTEM GENERAL ®*
TinyBoost®
TinyBuck®
TinyCalc™
TinyLogic®
TINYOPTO™
TinyPower™
TinyPWM™
TinyWire™
TranSiC™
TriFault Detect™
TRUECURRENT®*
µSerDes™
µSerDes™
UHC®
Ultra FRFET™
UniFET™
VCX™
VisualMax™
VoltagePlus™
XS™

*Trademarks of System General Corporation, used under license by Fairchild Semiconductor.

DISCLAIMER

FAIRCHILD SEMICONDUCTOR RESERVES THE RIGHT TO MAKE CHANGES WITHOUT FURTHER NOTICE TO ANY PRODUCTS HEREIN TO IMPROVE RELIABILITY, FUNCTION, OR DESIGN. FAIRCHILD DOES NOT ASSUME ANY LIABILITY ARISING OUT OF THE APPLICATION OR USE OF ANY PRODUCT OR CIRCUIT DESCRIBED HEREIN; NEITHER DOES IT CONVEY ANY LICENSE UNDER ITS PATENT RIGHTS, NOR THE RIGHTS OF OTHERS. THESE SPECIFICATIONS DO NOT EXPAND THE TERMS OF FAIRCHILD'S WORLDWIDE TERMS AND CONDITIONS, SPECIFICALLY THE WARRANTY THEREIN, WHICH COVERS THESE PRODUCTS.

LIFE SUPPORT POLICY

FAIRCHILD'S PRODUCTS ARE NOT AUTHORIZED FOR USE AS CRITICAL COMPONENTS IN LIFE SUPPORT DEVICES OR SYSTEMS WITHOUT THE EXPRESS WRITTEN APPROVAL OF FAIRCHILD SEMICONDUCTOR CORPORATION.

As used here in:

1. Life support devices or systems are devices or systems which, (a) are intended for surgical implant into the body or (b) support or sustain life, and (c) whose failure to perform when properly used in accordance with instructions for use provided in the labeling, can be reasonably expected to result in a significant injury of the user.
2. A critical component in any component of a life support, device, or system whose failure to perform can be reasonably expected to cause the failure of the life support device or system, or to affect its safety or effectiveness.

ANTI-COUNTERFEITING POLICY

Fairchild Semiconductor Corporation's Anti-Counterfeiting Policy. Fairchild's Anti-Counterfeiting Policy is also stated on our external website, www.Fairchildsemi.com, under Sales Support.

Counterfeiting of semiconductor parts is a growing problem in the industry. All manufactures of semiconductor products are experiencing counterfeiting of their parts. Customers who inadvertently purchase counterfeit parts experience many problems such as loss of brand reputation, substandard performance, failed application, and increased cost of production and manufacturing delays. Fairchild is taking strong measures to protect ourselves and our customers from the proliferation of counterfeit parts. Fairchild strongly encourages customers to purchase Fairchild parts either directly from Fairchild or from Authorized Fairchild Distributors who are listed by country on our web page cited above. Products customers buy either from Fairchild directly or from Authorized Fairchild Distributors are genuine parts, have full traceability, meet Fairchild's quality standards for handing and storage and provide access to Fairchild's full range of up-to-date technical and product information. Fairchild and our Authorized Distributors will stand behind all warranties and will appropriately address and warranty issues that may arise. Fairchild will not provide any warranty coverage or other assistance for parts bought from Unauthorized Sources. Fairchild is committed to combat this global problem and encourage our customers to do their part in stopping this practice by buying direct or from authorized distributors.

PRODUCT STATUS DEFINITIONS
Definition of Terms

Datasheet Identification	Product Status	Definition
Advance Information	Formative / In Design	Datasheet contains the design specifications for product development. Specifications may change in any manner without notice.
Preliminary	First Production	Datasheet contains preliminary data; supplementary data will be published at a later date. Fairchild Semiconductor reserves the right to make changes at any time without notice to improve design.
No Identification Needed	Full Production	Datasheet contains final specifications. Fairchild Semiconductor reserves the right to make changes at any time without notice to improve the design.
Obsolete	Not In Production	Datasheet contains specifications on a product that is discontinued by Fairchild Semiconductor. The datasheet is for reference information only.

Rev. I66

AMEYA360
Components Supply Platform

Authorized Distribution Brand :

Website :

Welcome to visit www.ameya360.com

Contact Us :

- ## Address :

401 Building No.5, JiuGe Business Center, Lane 2301, Yishan Rd
Minhang District, Shanghai , China

- ## Sales :

Direct +86 (21) 6401-6692

Email amall@ameya360.com

QQ 800077892

Skype ameyasales1 ameyasales2

- ## Customer Service :

Email service@ameya360.com

- ## Partnership :

Tel +86 (21) 64016692-8333

Email mkt@ameya360.com