DATE	DESCRIPTION	REV.
8.12.11	CHANGE AS PER ECN 11–104	A

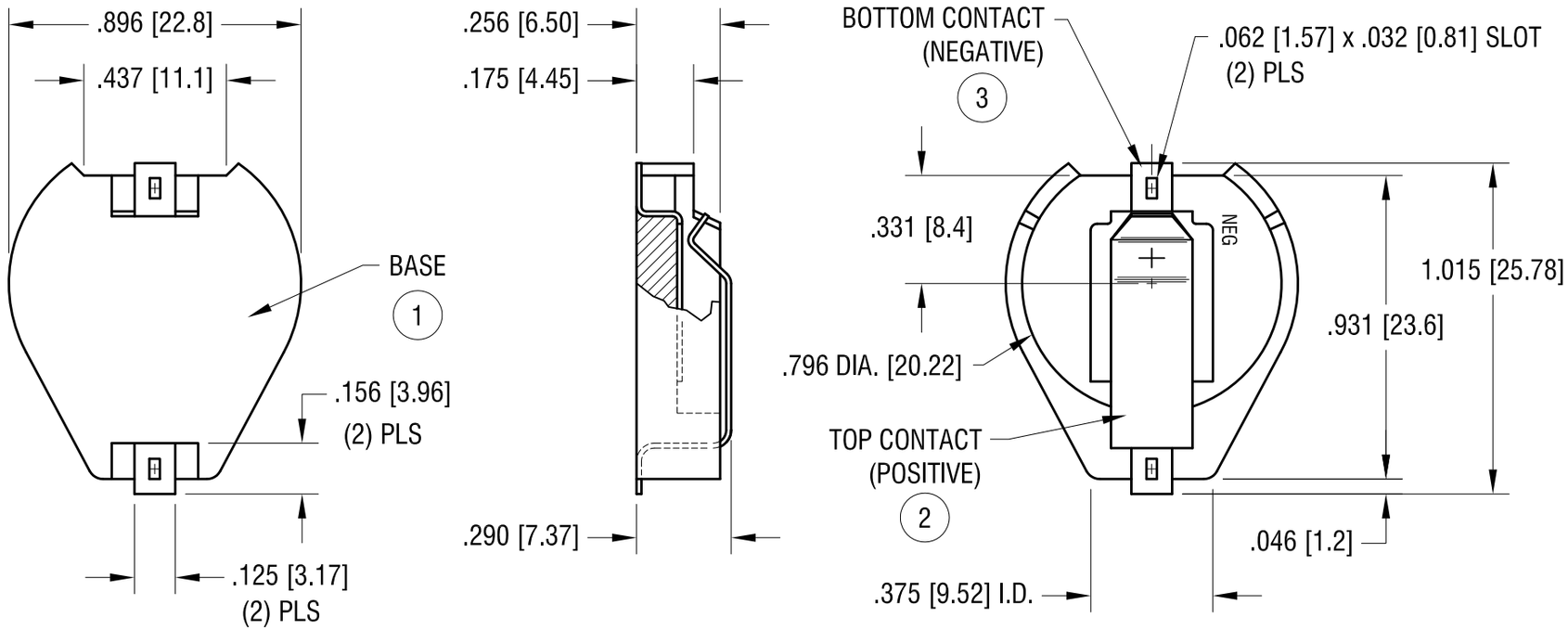

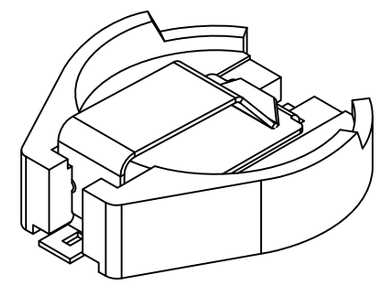

MOUNTING DETAIL

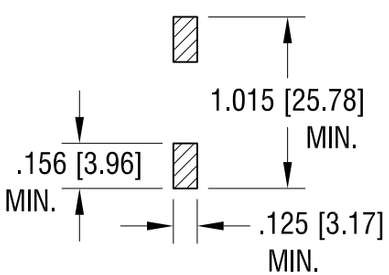

ITEM	DESCRIPTION	MATERIAL/FINISH
1	BASE BLACK	HIGH TEMPERATURE NYLON (UL 94V-0)
2	TOP CONTACT	SPRING STEEL .015 [0.38] TH'K
3	BOTTOM CONTACT	GOLD FLASH PLATE

THIS DOCUMENT IS THE PROPERTY OF KEYSTONE ELECTRONICS CORP. AND SHALL NOT BE REPRODUCED, DISTRIBUTED OR USED AS A BASIS FOR MANUFACTURE WITHOUT PRIOR WRITTEN PERMISSION FROM KEYSTONE ELECTRONICS CORP.

KEYSTONE ELECTRONICS CORP.
www.keyelco.com • ASTORIA, N.Y. 11105-2017 • Tel (718) 956-8900

PART NAME: 20mm BATTERY HOLDER, SMT

MATERIAL: AS NOTED

FINISH: AS NOTED

DRN BY: NT | DATE: 3.19.09

APP'D: LN | SCALE: 2X

TOLERANCES: INCH [MM]
DECIMAL ± .010 [± 0.25]
ANGULAR ± 1°
UNLESS OTHERWISE SPECIFIED

CODE: C

DWG NO. 1081

AMEYA360
Components Supply Platform

Authorized Distribution Brand :

Website :

Welcome to visit www.ameya360.com

Contact Us :

- ### Address :

  401 Building No.5, JiuGe Business Center, Lane 2301, Yishan Rd
  Minhang District, Shanghai , China

- ### Sales :

  Direct +86 (21) 6401-6692

  Email amall@ameya360.com

  QQ 800077892

  Skype ameyasales1 ameyasales2

- ### Customer Service :

  Email service@ameya360.com

- ### Partnership :

  Tel +86 (21) 64016692-8333

  Email mkt@ameya360.com