POWER TRANSFORMER CHASSIS MOUNT : TOROIDAL WORLD SERIES

VPT230-700

Electrical Specifications (@25C)

1. Maximum Power: 160VA
2. Input Voltage: **Series:** 230VAC, 50/60Hz
   Parallel: 115VAC, 50/60Hz
3. Output Voltage: **Series:** 230VAC CT @ 0.70A
   Parallel: 115.0VAC @ 1.40A
4. Voltage Regulation: 8% TYP from full load to no load
5. Temperature Rise: 50°C TYP
6. Hipot: 4000VAC, Primary to Secondary
7. Efficiency: 89% TYP. @ full load

Construction:

The toroidal construction inherently helps reduce stray fields, increases efficiency and minimizes size compared to traditional EI transformers. Built with Class B (130°) insulation system.

Safety:

World Series Transformers are designed and manufactured to meet most International Safety agency standards.

Agency File:

UL: File E122529, UL 506
CE: EN 61558-1:2005, EN 61558-2-6:1995, Low Voltage Directive (LVD)
EN 6-000-6-6:2001+A11:2004, EN 55014-1:2000+A1:2001+A2:2002, EN 6100-6-1:2001, EN 55014-2:1997+A1:2001, Electromagnetic Compatibility (EMC)

Dimensions (mm):

H*	I.D.	O.D.
48.0	32.0	103.0

*Add 3mm to the height for mounting hardware
Weight: 1.6Kg

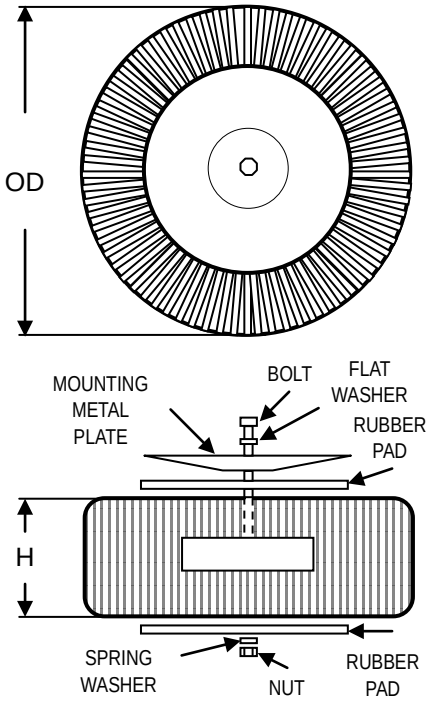

Mounting:

Transformer is provided with one metal mounting plate, two rubber pads, M6 x 60mm bolt, nut, spring and flat washer.

Connections:

Transformer is provided with 8" (200mm) long, 0.25" (6mm) stripped and tinned, stranded UL 1015 lead wire.

Input[1]: Series – BLUE and BROWN, Jumper GRAY to VIOLET
Parallel – BLUE and BROWN, Jumper BLUE to VIOLET, GRAY to BROWN
Output[1]: Series – BLACK and YELLOW, Jumper RED to ORANGE
Parallel – BLACK and YELLOW, Jumper BLACK to ORANGE, RED to YELLOW

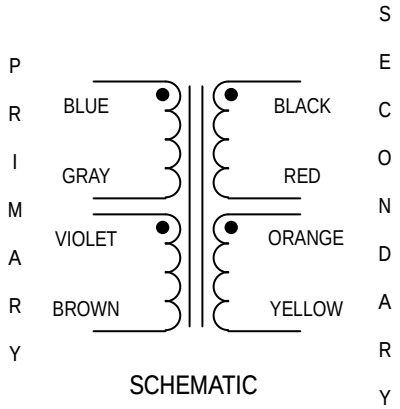

* Upon printing, this document is considered "uncontrolled". Please contact Triad Magnetics' website for the most current version.

[1] Primary and secondary windings are designed to be connected in series or parallel. Windings are not intended to be used independently.

Web: www.TriadMagnetics.com
Phone 951-277-0757
Fax 951-277-2757

22520B Temescal Canyon Road
Corona, California
92883

Release Date: May 3, 2011

AMEYA360
Components Supply Platform

Authorized Distribution Brand :

Website :

Welcome to visit www.ameya360.com

Contact Us :

- ### Address :

  401 Building No.5, JiuGe Business Center, Lane 2301, Yishan Rd
  Minhang District, Shanghai , China

- ### Sales :

  Direct +86 (21) 6401-6692

  Email amall@ameya360.com

  QQ 800077892

  Skype ameyasales1 ameyasales2

- ### Customer Service :

  Email service@ameya360.com

- ### Partnership :

  Tel +86 (21) 64016692-8333

  Email mkt@ameya360.com