UNIT:mm

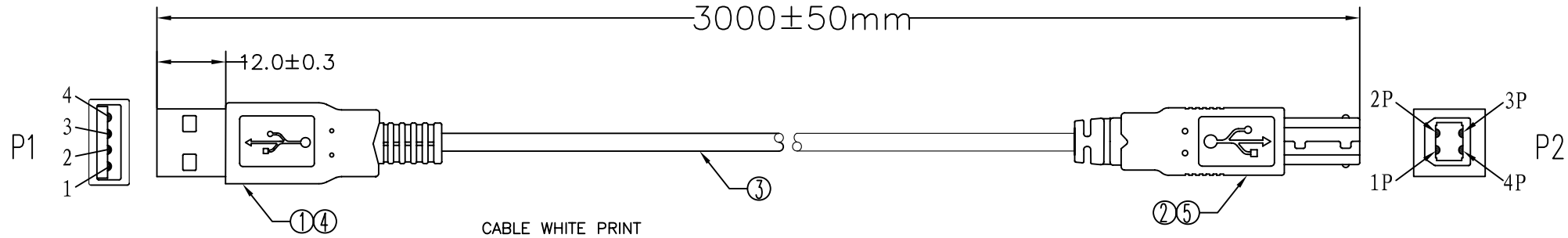

CABLE WHITE PRINT
USB CABLE E189529 AWM 2725 28AWG/1PR AND 24AWG/2C 80°C 30V VW-1

PIN ASSIGNMENT:

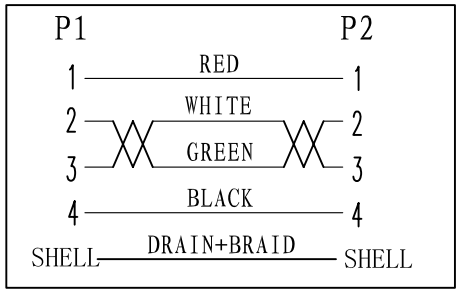

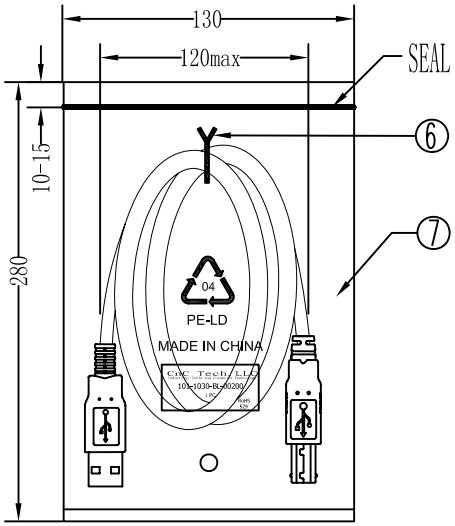

1PC/PE BAG

Electrical test:
1.100% short,open,miswire test
2.Conduct resistance:2 Ohm(max)
3.Insulation resistance:5Mohm(min)
4.dielectric test:DC 300V

NO.	NAME	Q'TY	SPECIFICATION
⑧	PE BAG	1/10	CLEAR SIZE:280*330*0.05mm PRINT BLACK"MADE IN CHINA"+"10PCS".
⑦	PE BAG	1	CLEAR SIZE:130*280*0.05mm PRINT BLACK"MADE IN CHINA"+"1PC"
⑥	TIE	1	BLACK L=80mm
⑤	OUT JACKET	6g	BLACK PVC-40P (MOULD NO:WM-65)
④	OUT JACKET	6g	BLACK PVC-40P (MOULD NO:WM-40)
③	CABLE	1	BLACK USB1.1 UL2725 28#/1P+24#/2C+AEB OD:4.7mm L=3000±10mm
②	CONN	1set	USB B MALE SHELL:NICKEL PIN G/F 3PCS TYPE INSULATOR COLOR:WHITE
①	CONN	1set	USB A MALE SHELL:NICKEL PIN G/F 3PCS TYPE INSULATOR COLOR:WHITE

CnC Tech, LLC
Industrial Cable and Connector Technology

DRAWED	ZHONGHS	DRAWING NO	
CHECKED		CUSTOMER	
APPROVAL		ITEM NO.	101-1030-BL-00200
DECIDED		DATE	2012-02-15
VERSIONS/EDITEON	A/0	PROJECTION	

AMEYA360
Components Supply Platform

Authorized Distribution Brand :

Website :

Welcome to visit www.ameya360.com

Contact Us :

- ### Address :

  401 Building No.5, JiuGe Business Center, Lane 2301, Yishan Rd
  Minhang District, Shanghai , China

- ### Sales :

  Direct +86 (21) 6401-6692

  Email amall@ameya360.com

  QQ 800077892

  Skype ameyasales1 ameyasales2

- ### Customer Service :

  Email service@ameya360.com

- ### Partnership :

  Tel +86 (21) 64016692-8333

  Email mkt@ameya360.com