DATE	DESCRIPTION	REV.
8.17.99	CHANGE AS PER ECN 99–059	A
10.21.02	CHANGE AS PER ECN 02–069	B
6.8.05	CHANGE AS PER ECN 05–034	C
12.17.09	CHANGE AS PER ECN 09–190	D
3.10.11	CHANGE AS PER ECN 11–036	E

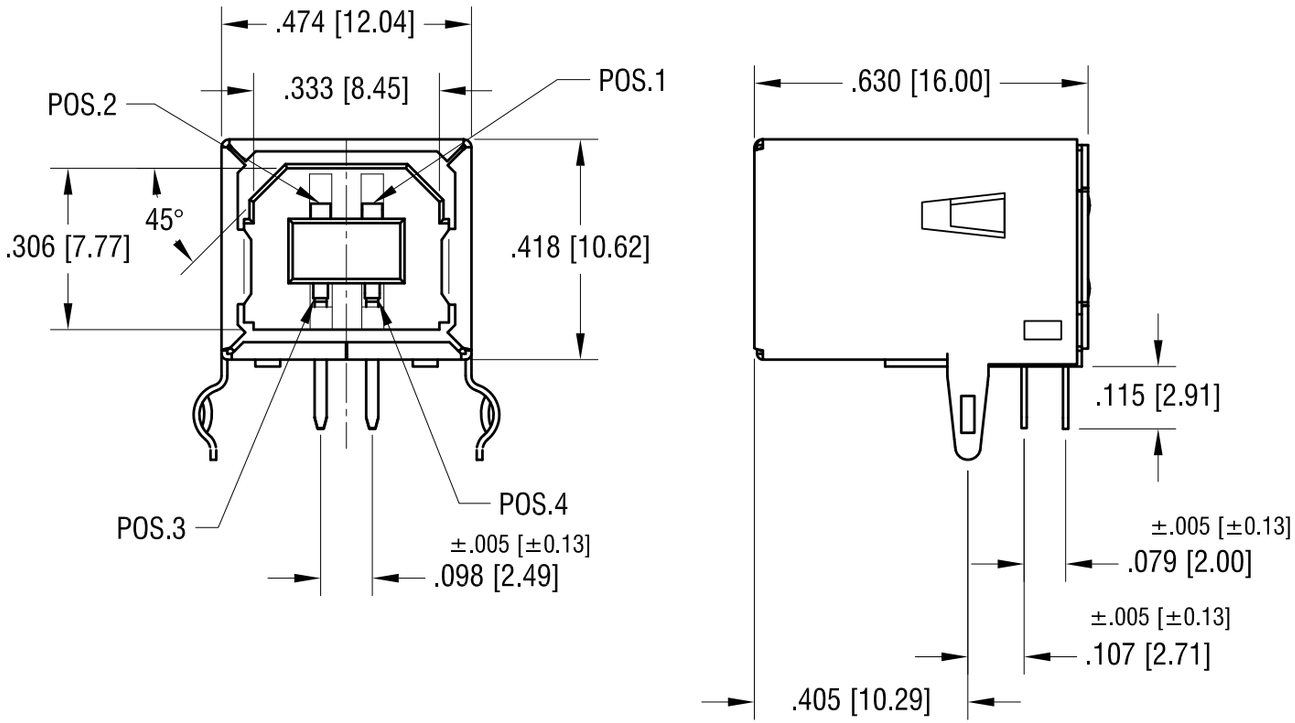

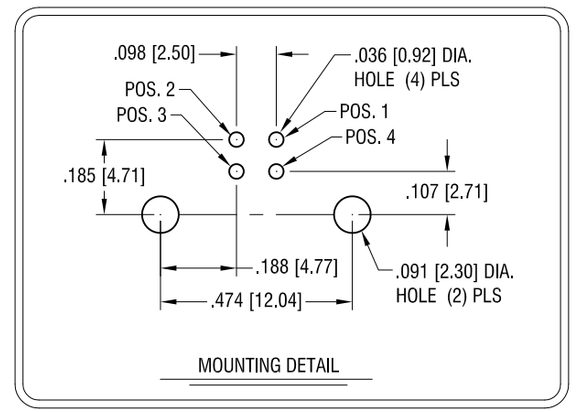

Notes:

Materiall:

Shell: Mat'l- Phosphor Bronze
Finish: Tin plate, over Nickel Plate
Insulator: PBT
Contacts: Phosphor Bronze

Finish:

Contact Area: Gold Plate over Nickel Plate
on Solder Tail: Tin Plate over Nickel Plate

Electrical Specifications
Rated Voltage: 30V AC (rms)
Contact Current Rating: 1 A Max.
Contact Resistance: 30 milliohms Max.
Dielectric Withstanding: 750V AC
Operating Temperature: -55°C to 85°C

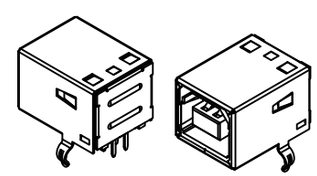

THIS DOCUMENT IS THE PROPERTY OF KEYSTONE ELECTRONICS CORP. AND SHALL NOT BE REPRODUCED, DISTRIBUTED OR USED AS A BASIS FOR MANUFACTURE WITHOUT PRIOR WRITTEN PERMISSION FROM KEYSTONE ELECTRONICS CORP.

KEYSTONE ELECTRONICS CORP.
www.keyelco.com • ASTORIA, N.Y. 11105-2017 • Tel (718) 956-8900

PART NAME: USB B-TYPE HORIZONTAL SOCKET

MATERIAL: AS NOTED

FINISH: AS NOTED

DRN BY: BOONE | DATE: 6.18.98

APP'D: LN | SCALE: 3x

TOLERANCES: DECIMAL ± .010 [± 0.25] ANGULAR ± 1° UNLESS OTHERWISE SPECIFIED | INCH | [MM]

CODE: C/M

DWG NO. 924

AMEYA360
Components Supply Platform

Authorized Distribution Brand :

Website :

Welcome to visit www.ameya360.com

Contact Us :

- ### Address :

  401 Building No.5, JiuGe Business Center, Lane 2301, Yishan Rd
  Minhang District, Shanghai , China

- ### Sales :

  Direct +86 (21) 6401-6692

  Email amall@ameya360.com

  QQ 800077892

  Skype ameyasales1 ameyasales2

- ### Customer Service :

  Email service@ameya360.com

- ### Partnership :

  Tel +86 (21) 64016692-8333

  Email mkt@ameya360.com