PART NAME	NEMA 4X DIE CAST ALUMINUM ENCLOSURE	PART No.	AN-2864 AN-2864-B	REVISION DATE	3-19-14

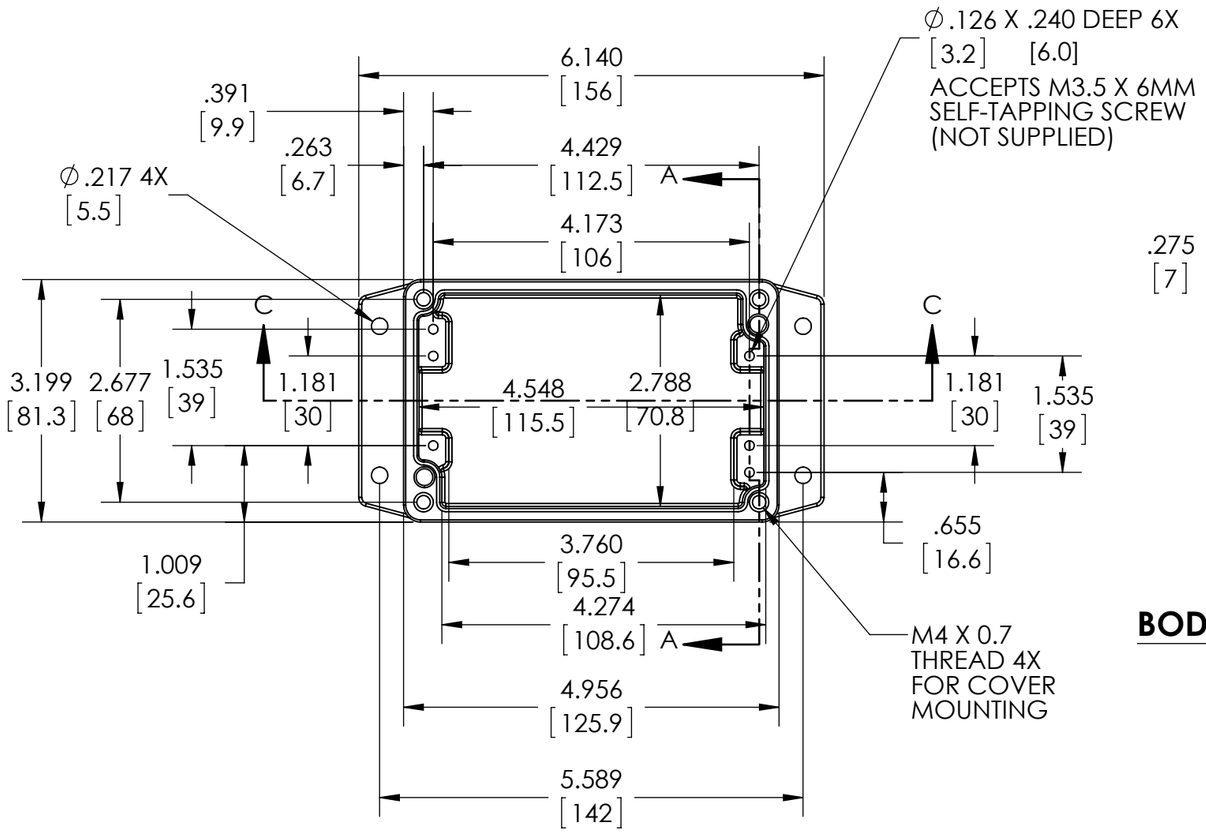

BODY

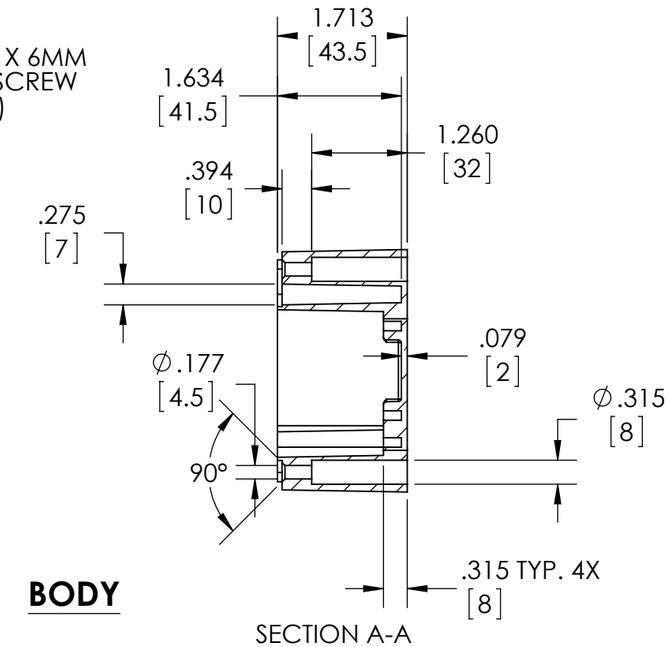

SECTION A-A

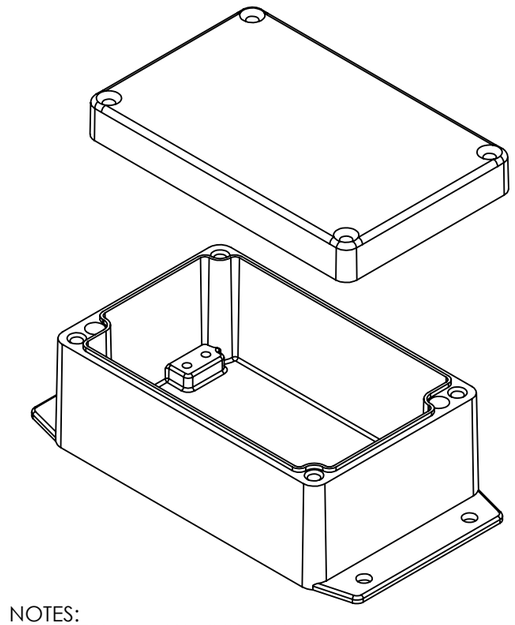

NOTES:
1- MATERIAL: ALUMINUM ALLOY ADC-12
2- FINISH: NATURAL (NO SUFFIX)
BLACK (SUFFIX -B)
3- FOUR (4) M4 X 0.7mm SCREWS SUPPLIED FOR ASSEMBLY OF COVER TO BODY
4- ALL HOLE DIAMETERS HAVE ±.005[.12] TOLERANCE.
ALL OTHER DIMENSIONS HAVE ±.015[.38] TOLERANCE.
5- ALL OUTSIDE DRAFT ANGLE: 1°
ALL INSIDE DRAFT ANGLE: 1/2°
6- DIMENSIONS ARE INCH[MM]

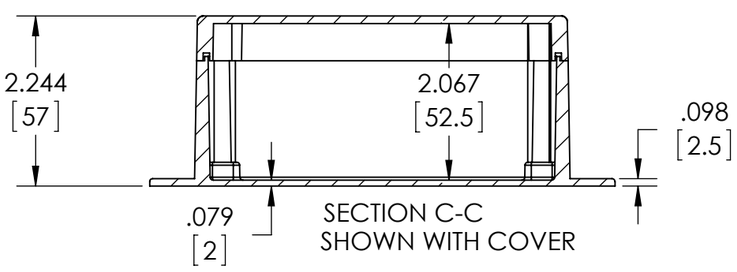

SECTION C-C
SHOWN WITH COVER

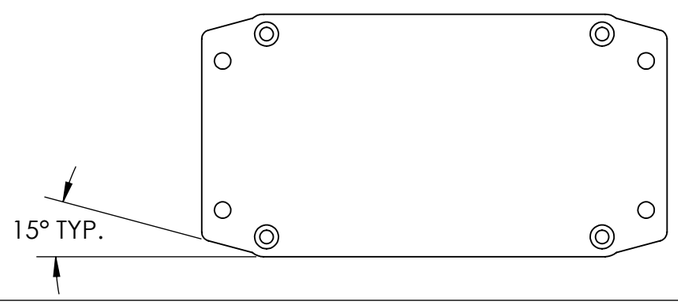

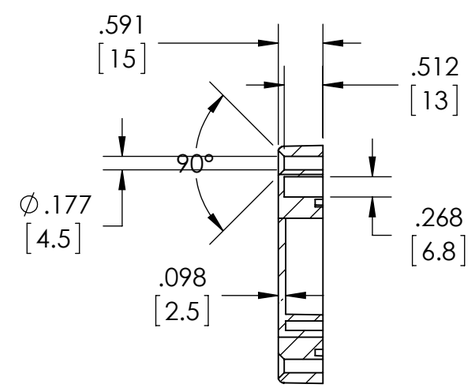

SECTION B-B

COVER

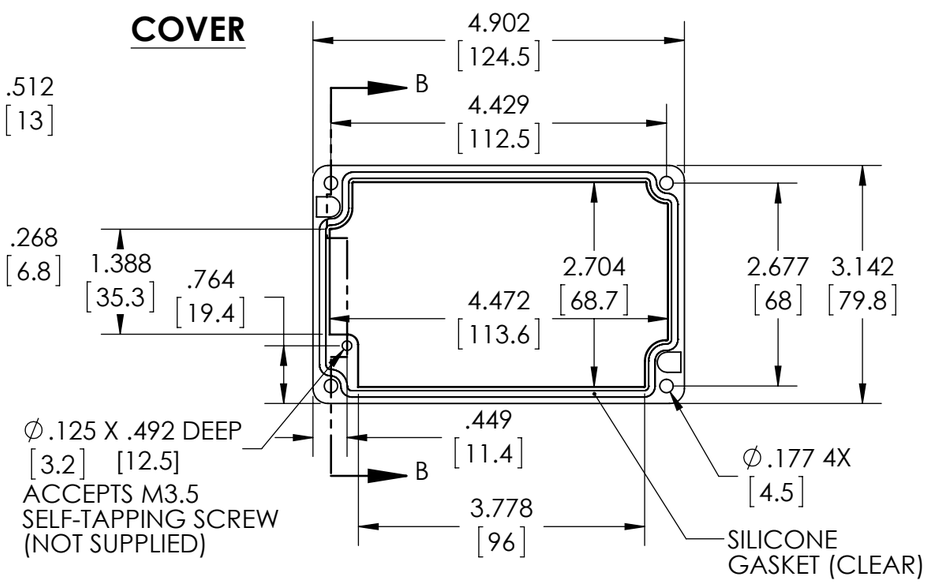

AMEYA360
Components Supply Platform

Authorized Distribution Brand :

Website :

Welcome to visit www.ameya360.com

Contact Us :

- Address :

401 Building No.5, JiuGe Business Center, Lane 2301, Yishan Rd
Minhang District, Shanghai , China

- Sales :

Direct +86 (21) 6401-6692

Email amall@ameya360.com

QQ 800077892

Skype ameyasales1 ameyasales2

- Customer Service :

Email service@ameya360.com

- Partnership :

Tel +86 (21) 64016692-8333

Email mkt@ameya360.com