REVISIONS					
REV	ECO	DESCRIPTION	DATE	BY	APPR
B1	-	RELEASED DRAWING	JAN-18-2014	ARROW	TOMMY

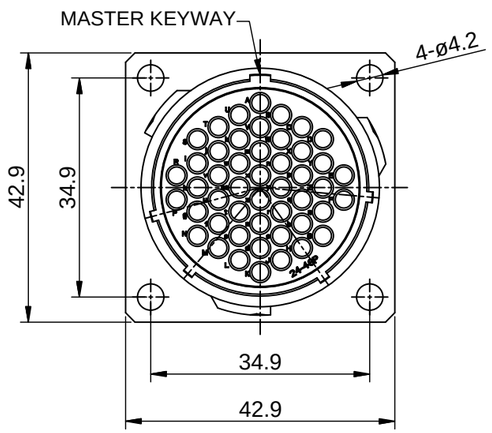

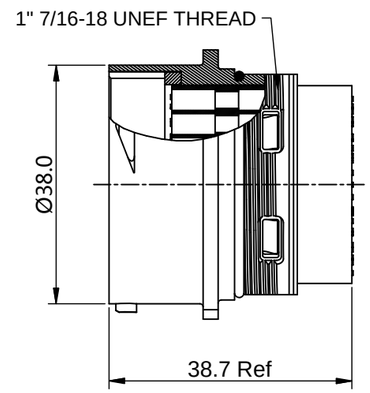

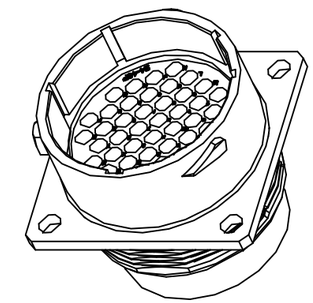

NOTES : (UNLESS OTHERWISE SPECIFIED)

1. MATERIAL :
   SHELL : ZINC ALLOY , NICKEL PLATED.
   INSERT : THERMOPLASTIC , UL94 V-0.
   O-RING : NBR.
   SEAL GASKET : NBR.
2. SPECIFICATIONS :
   2.1 RATED CURRENT : 13A (MAX).
   2.2 RATED VOLTAGE : 300V (AC/DC) .
   2.3 OPERATING TEMPERATURE : -40°C ~ +105°C.
   2.4 DIELECTRIC WITHSTANDING VOLTAGE : LESS THAN 2 MILLIAMPS CURRENT LEAKAGE@2000 VOLTS AC.
   2.5 INSULATION RESISTANCE : 5000 MEGOHMS MIN.
   2.6 IP--CLASS : IP67.
   2.7 MATING CYCLES DURABILITY : 500 CYCLES MIN.
   2.8 ROHS COMPLIANT.
3. SUITABLE CONTACTS : 16# CONTACTS.
4. ALL DIMENSIONS ARE FOR REFERENCE USE ONLY.

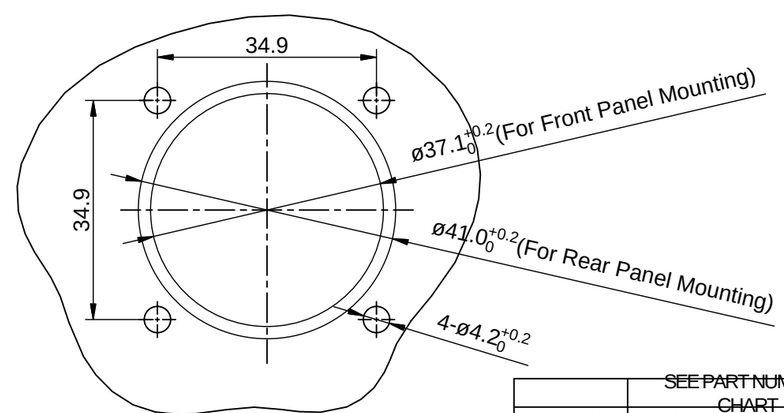

PANEL CUT OUT REFERENCE

KEY POS	PART NUMBER
N	RT002448PNH
W	RT002448PWH
X	RT002448PXH
Y	RT002448PYH
Z	RT002448PZH

QUANTITY	PART NUMBER	DESCRIPTION	ITEM
	~~SEE PART NUMBER CHART~~		

MATERIALS LIST

UNLESS OTHERWISE SPECIFIED
1) All dimensions are in metric(mm).
2) Tolerances are as follows:
1 PL DEC ±0.30 | Fractions ±1/64
2 PL DEC ±0.15 | Angles ±1°
3 PL DEC ±0.08
3) Note reference = X

MATERIAL SPECIFICATIONS:

PROCESS SPECIFICATIONS:

NEXT ASS'Y:

SIGNATURES		DATE
DRAWN:	ARROW	JAN-17-2014
CHECKED:		
ENGINEER:		
APPROVAL:		
CUSTOMER:		

THIS DRAWING IS SUPPLIED FOR INFORMATION ONLY. DESIGN FEATURES, SPECIFICATIONS AND PERFORMANCE DATA SHOWN HEREON ARE THE PROPERTY OF THE AMPHENOL CORPORATION. NO RIGHTS OF REPRODUCTION ARE IMPLIED. ALL DIMENSIONS ARE SUBJECT TO NORMAL MANUFACTURING VARIATIONS.

Amphenol
Sine Systems - www.amphenol-sine.com
44724 Morley Drive
Clinton Township, MI 48036

ECO-MATE,RECEPTACLE,
SIZE 24,48POS, PIN.

SIZE	TYPE	DWG NO:	REVISION
B	C-	RT002448P*H	B1

SCALE: NONE | SHEET 1 OF 1

TITLE: ECO-MATE,RECEPTACLE, SIZE 24,48POS, PIN.
DWG NO: RT002448P*H
REV: B1
SH: 1
OF: 1

AMEYA360
Components Supply Platform

Authorized Distribution Brand :

Website :

Welcome to visit www.ameya360.com

Contact Us :

- **Address :**

  401 Building No.5, JiuGe Business Center, Lane 2301, Yishan Rd
  Minhang District, Shanghai , China

- **Sales :**

  Direct +86 (21) 6401-6692

  Email amall@ameya360.com

  QQ 800077892

  Skype ameyasales1 ameyasales2

- **Customer Service :**

  Email service@ameya360.com

- **Partnership :**

  Tel +86 (21) 64016692-8333

  Email mkt@ameya360.com