19-4146; Rev 1; 9/08

125V/3A, High-Speed, Half-Bridge MOSFET Drivers

General Description

The MAX15018A/MAX15018B/MAX15019A/MAX15019B high-frequency, 125V half-bridge, n-channel MOSFET drivers drive high- and low-side MOSFETs in high-voltage applications. These drivers are independently controlled, and their 35ns (typ) propagation delay, from input to output, are matched to within 2ns (typ). The high-voltage operation with very low and matched propagation delay between drivers, and high source-/sink-current capabilities in a thermally enhanced package make these devices suitable for high-power, high-frequency telecom power converters. The 125V maximum input voltage provides plenty of margin over the 100V input transient requirement of telecom standards. A reliable on-chip bootstrap diode connected between V_{DD} and BST eliminates the need for an external discrete diode.

The MAX15018A/MAX15019A both offer noninverting drivers. The MAX15018B/MAX15019B offer a noninverting high-side driver and an inverting low-side driver (see the *Selector Guide*.) The MAX15018_ feature CMOS (V_{DD}/2) logic inputs. The MAX15019_ feature TTL-logic inputs. The drivers are available in the industry-standard 8-pin SO footprint and pin configuration with a thermally enhanced 8-pin SO package. All devices operate over the -40°C to +125°C automotive temperature range.

Applications

Telecom Power Supplies

Synchronous Buck DC-to-DC Converters

Half-Bridge, Full-Bridge, and Two-Switch Forward Converters

Power-Supply Modules

Motor Control

Pin Configuration

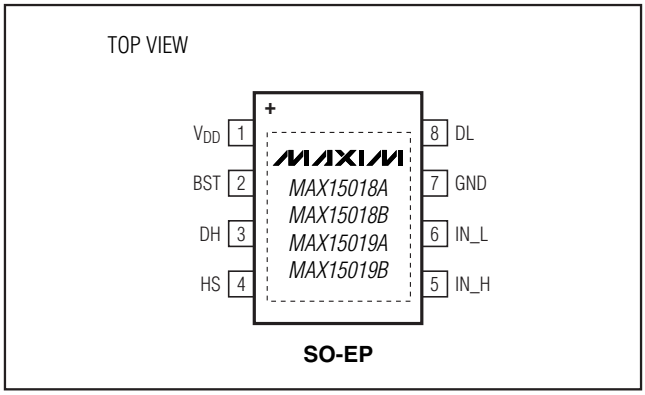

Features

- **HIP2100IB/HIP2101IB Pin Compatible (MAX15018A/MAX15019A)**
- **Up to 125V V_{IN} Operation**
- **8V to 12.6V V_{DD} Input Supply Range**
- **3A Peak Source and Sink Current**
- **35ns Propagation Delay**
- **Guaranteed 8ns or Less Propagation Delay Matching Between High- and Low-Side Drivers**
- **Both Noninverting/Noninverting and Noninverting/Inverting Logic-Input Versions Available**
- **Up to 15V Logic Inputs, Independent of V_{DD} Supply Voltage**
- **Low 8pF Input Capacitance**
- **Available in CMOS (V_{DD}/2) or TTL Logic-Level Inputs with Hysteresis**
- **Available in a Space-Saving, Thermally Enhanced 8-Pin SO-EP Package**

Ordering Information

PART	TEMP RANGE	PIN-PACKAGE
MAX15018AASA+	-40°C to +125°C	8 SO-EP*
MAX15018BASA+	-40°C to +125°C	8 SO-EP*
MAX15019AASA+	-40°C to +125°C	8 SO-EP*
MAX15019BASA+	-40°C to +125°C	8 SO-EP*

+Denotes a lead-free/RoHS-compliant package.

**EP = Exposed pad. Internally connected to GND.*

Typical Operating Circuit

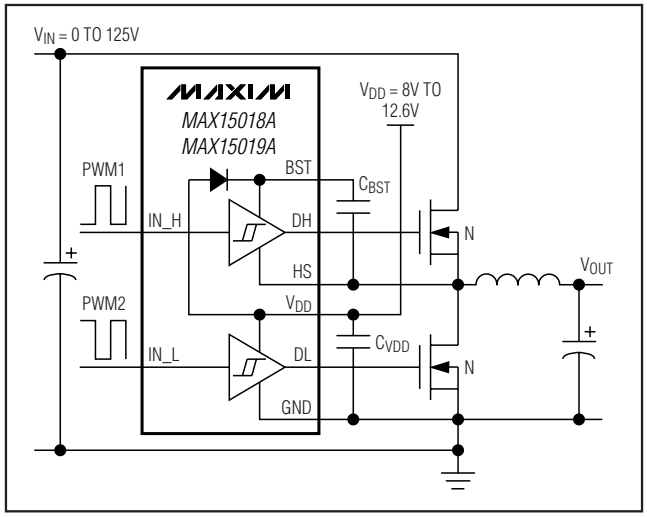

For pricing, delivery, and ordering information, please contact Maxim Direct at 1-888-629-4642, or visit Maxim's website at www.maxim-ic.com.

125V/3A, High-Speed, Half-Bridge MOSFET Drivers

ABSOLUTE MAXIMUM RATINGS

V_{DD} to GND .....-0.3V to +15V
IN_H, IN_L to GND .....-0.3V to +15V
DL to GND .....-0.3V to (V_{DD} + 0.3V)
DH to HS.....-0.3V to (V_{DD} + 0.3V)
BST to HS .....-0.3V to +15V
HS to GND (repetitive transient).....-5V to +130V
HS dv/dt to GND.....50V/ns

Continuous Power Dissipation (T_A = +70°C)
Single and Multilayer Board
8-Pin SO-EP (derate 23.8mW/°C above +70°C)*.....1.904W
θ_{JC}.....6°C/W
Operating Temperature .....-40°C to +125°C
Maximum Junction Temperature .....+150°C
Storage Temperature Range .....-65°C to +150°C
Lead Temperature (soldering, 10s) .....+300°C

**As per JEDEC Standard 51 (Single-Layer Board).*

Stresses beyond those listed under "Absolute Maximum Ratings" may cause permanent damage to the device. These are stress ratings only, and functional operation of the device at these or any other conditions beyond those indicated in the operational sections of the specifications is not implied. Exposure to absolute maximum rating conditions for extended periods may affect device reliability.

ELECTRICAL CHARACTERISTICS

(V_{DD} = V_{BST} = 8V to 12.6V, V_{HS} = V_{GND} = 0V, T_A = T_J = -40°C to +125°C, unless otherwise noted. Typical values are at V_{DD} = V_{BST} = 12V and T_A = +25°C.) (Note 1)

PARAMETER	SYMBOL	CONDITIONS		MIN	TYP	MAX	UNITS
POWER SUPPLY							
Operating Supply Voltage	V_{VDD}			8.0		12.6	V
V_{DD} Quiescent Supply Current	I_{DDQ}	IN_H and IN_L are unconnected (no switching)	MAX15018A/ MAX15018B		65	130	µA
			MAX15019A/ MAX15019B		95	190	
V_{DD} Operating Supply Current	I_{DDO}	f_{SW} = 500kHz, V_{DD} = 12V, no capacitive load			2.75	3.75	mA
BST Quiescent Supply Current	I_{BSTQ}	IN_H and IN_L are unconnected (no switching)			95	190	µA
BST Operating Supply Current	I_{BSTO}	f_{SW} = 500kHz, V_{BST} - V_{HS} = 12V, no capacitive load			2.75	3.75	mA
UVLO (V_{DD} to GND)	V_{DD_UVLO}	V_{DD} rising		6.5	7.3	8	V
UVLO (BST to HS)	V_{BST_UVLO}	V_{BST} rising		6.2	6.9	7.6	V
UVLO Hysteresis					0.5		V
LOGIC INPUT							
Input-Logic High	V_{IH}	MAX15018A/MAX15018B (CMOS)		0.67 x V_{DD}			V
		MAX15019A/MAX15019B (TTL)		2			
Input-Logic Low	V_{IL}	MAX15018A/MAX15018B (CMOS)				0.33 x V_{DD}	V
		MAX15019A/MAX15019B (TTL)				0.8	
Logic-Input Hysteresis	V_{HYS}	MAX15018A/MAX15018B (CMOS)			1.65		V
		MAX15019A/MAX15019B (TTL)			0.4		

ELECTRICAL CHARACTERISTICS (continued)

(V_{DD} = V_{BST} = 8V to 12.6V, V_{HS} = V_{GND} = 0V, T_A = T_J = -40°C to +125°C, unless otherwise noted. Typical values are at V_{DD} = V_{BST} = 12V and T_A = +25°C.) (Note 1)

PARAMETER	SYMBOL	CONDITIONS		MIN	TYP	MAX	UNITS
Logic-Input Current	$I_{IN_}$	IN_H = IN_L = GND (MAX15018A/MAX15019A)		-1		+1	µA
		IN_H = GND, IN_L = V_{DD} (MAX15018B/MAX15019B)					
Input Resistance	$R_{IN_}$	IN_L to GND (MAX15018A/MAX15019A)			5001		kΩ
		IN_L to V_{DD} (MAX15018B/MAX15019B)					
		IN_H to GND					
Input Capacitance	$C_{IN_}$				8		pF
HIGH-SIDE GATE DRIVER							
HS Maximum Voltage	V_{HS_MAX}			125			V
BST Maximum Voltage	V_{BST_MAX}			140			V
Driver Output Resistance	R_{ON_HP}	(V_{BST} - V_{HS}) = 12V, I_{DH} = 100mA (sourcing)	T_A = +25°C		1.75	2.4	Ω
			T_A = +125°C		2.3	3.0	
	R_{ON_HN}	(V_{BST} - V_{HS}) = 12V, I_{DH} = 100mA (sinking)	T_A = +25°C		1.1	1.75	
			T_A = +125°C		1.6	2.25	
Power-Off Pulldown Clamp Voltage		V_{BST} = 0V or unconnected, I_{DH} = 1mA (sinking)			0.88	1.2	V
Peak Output Current	I_{PK_HP}	V_{DH} = 0V			3		A
	I_{PK_HN}	V_{DH} = 12V			3		
LOW-SIDE GATE DRIVER							
Driver Output Resistance	R_{ON_LP}	V_{DD} = 12V, I_{DL} = 100mA (sourcing)	T_A = +25°C		1.75	2.4	Ω
			T_A = +125°C		2.3	3.0	
	R_{ON_LN}	V_{DD} = 12V, I_{DL} = 100mA (sinking)	T_A = +25°C		1.1	1.75	
			T_A = +125°C		1.6	2.25	
Power-Off Pulldown Clamp Voltage		V_{DD} = 0V or unconnected, I_{DL} = 1mA (sinking)			0.88	1.2	V
Peak Output Current	I_{PK_LP}	V_{DL} = 0V			3		A
	I_{PK_LN}	V_{DL} = 12V			3		
INTERNAL BOOTSTRAP DIODE							
Forward Voltage Drop	V_F	I_{BST} = 100mA			0.9	1.1	V
Turn-On and Turn-Off Time	t_{RR}	I_{BST} = 100mA			40		ns

125V/3A, High-Speed, Half-Bridge MOSFET Drivers

ELECTRICAL CHARACTERISTICS (continued)

(V_{DD} = V_{BST} = 8V to 12.6V, V_{HS} = V_{GND} = 0V, T_A = T_J = -40°C to +125°C, unless otherwise noted. Typical values are at V_{DD} = V_{BST} = 12V and T_A = +25°C.) (Note 1)

PARAMETER	SYMBOL	CONDITIONS		MIN	TYP	MAX	UNITS
SWITCHING CHARACTERISTICS FOR HIGH- AND LOW-SIDE DRIVERS (V_{DD} = V_{BST} = +12V)							
Rise Time	t_R	No C_L			1		ns
		C_L = 1000pF			5		
		C_L = 5000pF			25		
		C_L = 10,000pF			50		
Fall Time	t_F	No C_L			1		ns
		C_L = 1000pF			5		
		C_L = 5000pF			20		
		C_L = 10,000pF			40		
Turn-On Propagation Delay Time	t_{D_ON}	Figure 1, C_L = 1000pF (Note 2)	MAX15018A/ MAX15018B (CMOS)		33	60	ns
			MAX15019A/ MAX15019B (TTL)		36	66	
Turn-Off Propagation Delay Time	t_{D_OFF}	Figure 1, C_L = 1000pF (Note 2)	MAX15018A/ MAX15018B (CMOS)		30	55	ns
			MAX15019A/ MAX15019B (TTL)		36	66	
Delay Matching Between High-Side Turn-On to Low-Side Turn-On	t_{MATCH1}	C_L = 1000pF (Note 2)	MAX15018A/ MAX15018B (CMOS)		1	5	ns
			MAX15019A/ MAX15019B (TTL)		1	6	
Delay Matching Between High-Side Turn-Off to Low-Side Turn-Off	t_{MATCH2}	C_L = 1000pF (Note 2)	MAX15018A/ MAX15018B (CMOS)		1	5	ns
			MAX15019A/ MAX15019B (TTL)		1	6	
Delay Matching Between High-Side Turn-Off to Low-Side Turn-On	t_{MATCH3}	C_L = 1000pF (Note 2)	MAX15018A/ MAX15018B (CMOS)		2	8	ns
			MAX15019A/ MAX15019B (TTL)		1	6	
Delay Matching Between High-Side Turn-On to Low-Side Turn-Off	t_{MATCH4}	C_L = 1000pF (Note 2)	MAX15018A/ MAX15018B (CMOS)		2	8	ns
			MAX15019A/ MAX15019B (TTL)		1	6	
Minimum Input Pulse Width for Output Change	t_{PW}				20		ns

Note 1: All devices are 100% production tested at T_A = T_J = +125°C. Limits over temperature are guaranteed by design and characterization.

Note 2: Guaranteed by design, not production tested.

Typical Operating Characteristics

(T_A = +25°C, unless otherwise noted.)

V_{DD} AND BST UNDERVOLTAGE LOCKOUT vs. TEMPERATURE

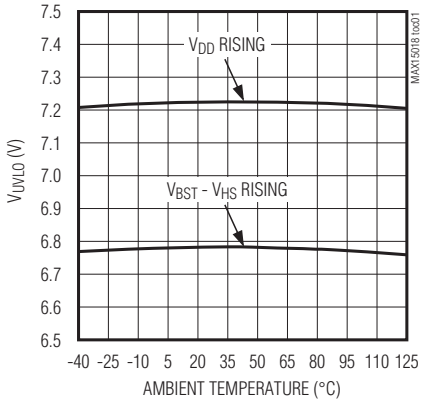

V_{DD} AND BST UNDERVOLTAGE LOCKOUT HYSTERESIS vs. TEMPERATURE

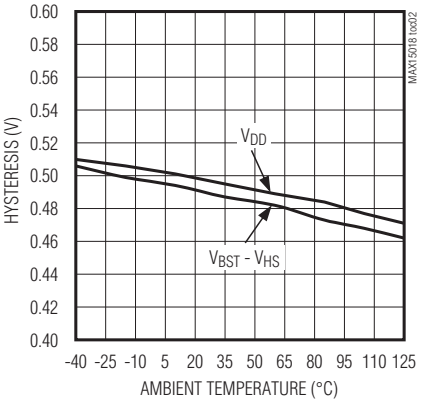

UNDERVOLTAGE LOCKOUT RESPONSE (V_{DD} RISING)

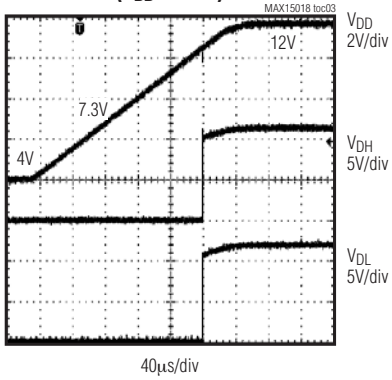

UNDERVOLTAGE LOCKOUT RESPONSE (V_{DD} FALLING)

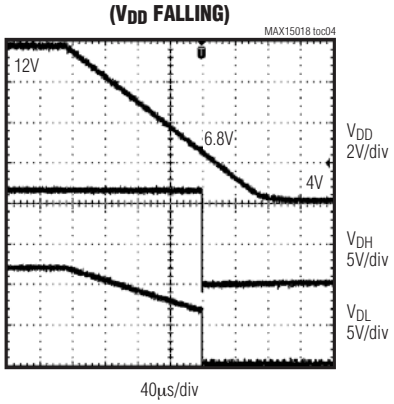

MAX15018A I_{DDO} + I_{BSTO} CURRENT vs. V_{DD} (250kHz SWITCHING)

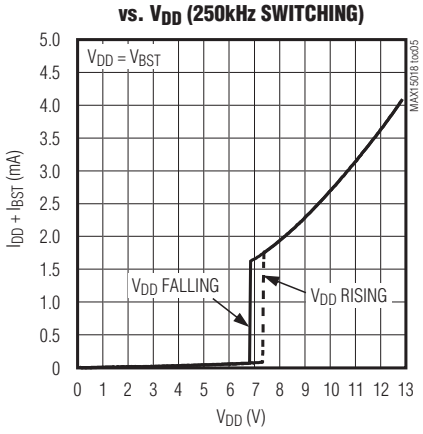

INTERNAL BOOTSTRAP DIODE I-V CHARACTERISTICS

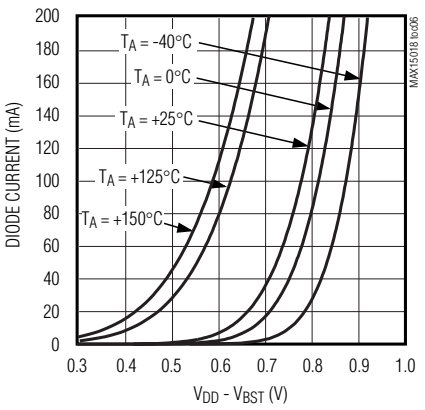

MAX15018A V_{DD} QUIESCENT CURRENT vs. V_{DD} (NO SWITCHING)

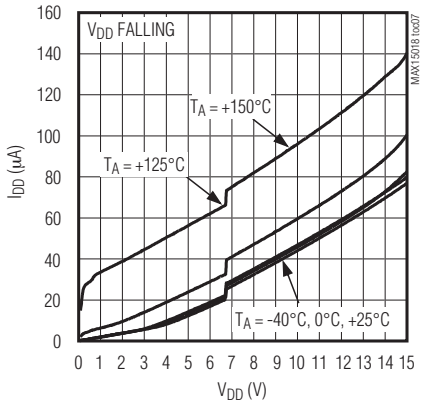

MAX15018A BST QUIESCENT CURRENT vs. V_{BST} (NO SWITCHING)

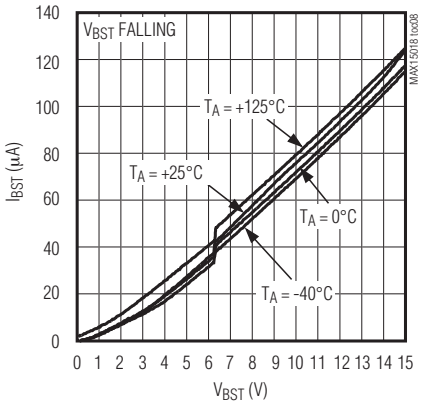

MAX15018A I_{DD} AND I_{BST} vs. SWITCHING FREQUENCY

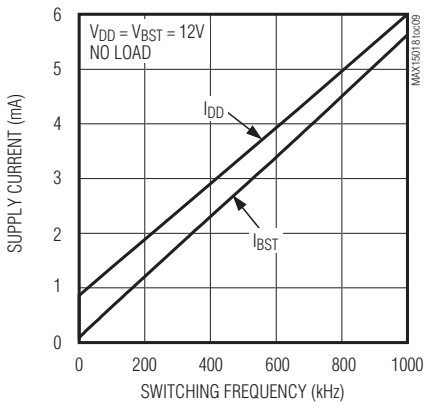

125V/3A, High-Speed, Half-Bridge MOSFET Drivers

Typical Operating Characteristics (continued)

(T_A = +25°C, unless otherwise noted.)

DH OR DL OUTPUT LOW VOLTAGE vs. TEMPERATURE

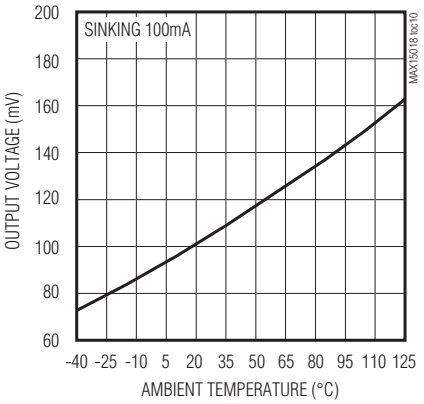

DH AND DL OUTPUT HIGH VOLTAGE vs. TEMPERATURE

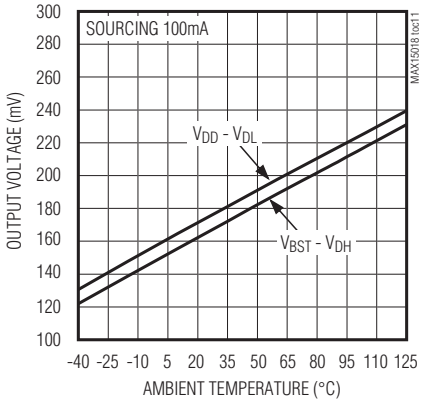

PEAK OUTPUT CURRENT vs. OUTPUT VOLTAGE

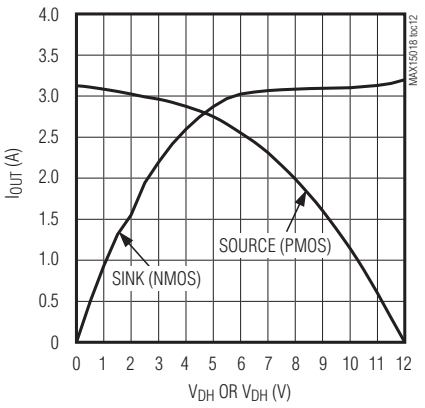

DH OR DL OUTPUT RISE TIME vs. TEMPERATURE

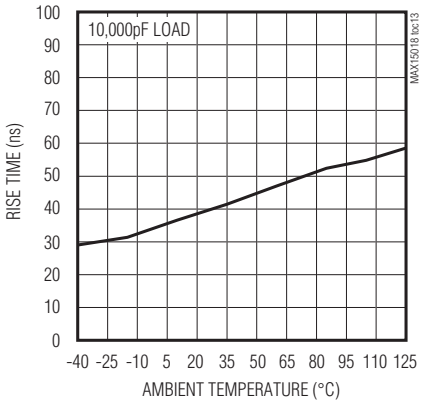

DH OR DL OUTPUT FALL TIME vs. TEMPERATURE

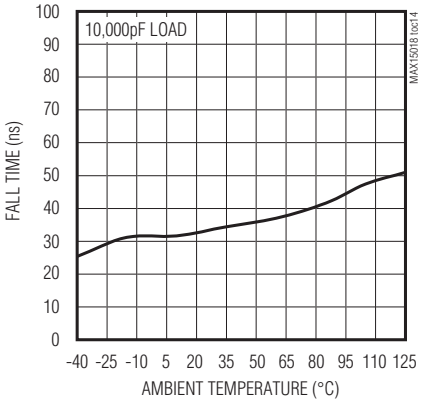

DH OR DL RISING PROPAGATION DELAY vs. TEMPERATURE

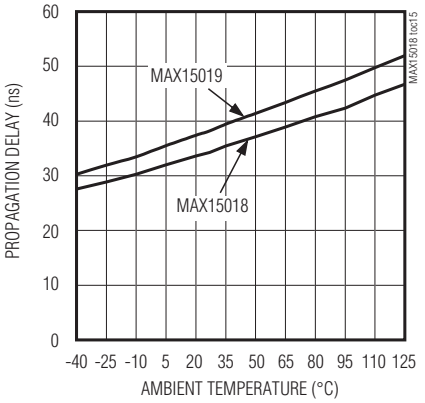

DH OR DL FALLING PROPAGATION DELAY vs. TEMPERATURE

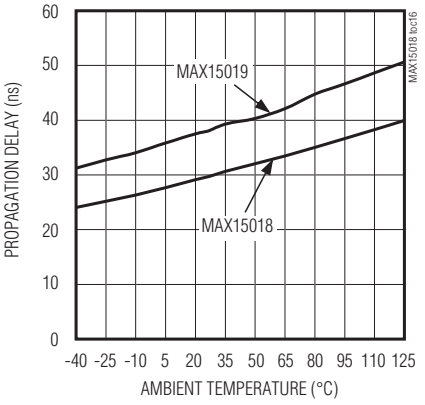

DELAY MATCHING (DH AND DL RISING)

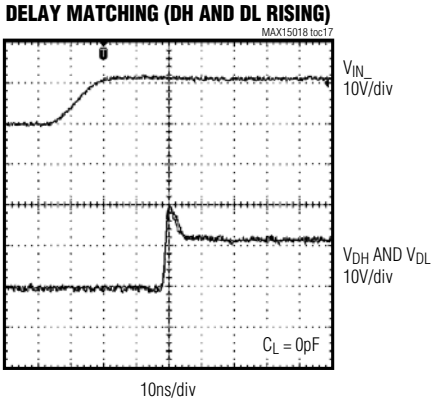

Typical Operating Characteristics (continued)

(T_A = +25°C, unless otherwise noted.)

DELAY MATCHING (DH AND DL RISING)

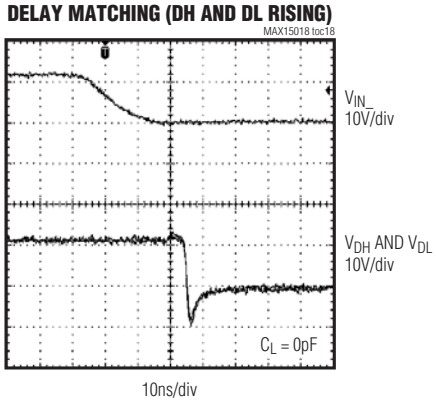

RESPONSE TO V_{DD} GLITCH

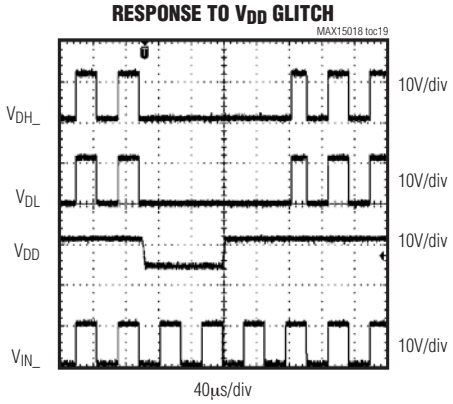

Pin Description

PIN	NAME	FUNCTION
1	V_{DD}	Input Supply Voltage. Valid supply voltage ranges from 8V to 12.6V. Bypass V_{DD} to GND with a parallel combination of 0.1µF and 1µF ceramic capacitors as close to the IC as possible.
2	BST	Boost Flying Capacitor Connection. Connect a 0.22µF ceramic capacitor from BST to HS as close to the IC as possible for the high-side MOSFET driver supply.
3	DH	High-Side Gate Driver Output. Driver output for the high-side MOSFET gate.
4	HS	Source Connection for High-Side MOSFET. Also serves as the return for the high-side driver.
5	IN_H	High-Side Noninverting Logic Input
6	IN_L	Low-Side Noninverting (MAX15018A/MAX15019A) or Low-Side Inverting (MAX15018B/MAX15019B) Input
7	GND	Ground. Use GND as a return path to the DL driver output and the IN_H, IN_L inputs. Must be connected to ground.
8	DL	Low-Side Gate Driver Output. Driver output for the low-side MOSFET gate.
—	EP	Exposed Pad. Internally connected to GND. Externally connect the exposed pad to a large ground plane to aid in heat dissipation. Grounding EP does not substitute the requirement to connect GND to ground.

125V/3A, High-Speed, Half-Bridge MOSFET Drivers

Detailed Description

The MAX15018A/MAX15018B/MAX15019A/MAX15019B half-bridge, n-channel MOSFET drivers control high- and low-side MOSFETs in high-voltage, high peak-current applications and offer a high 125V voltage range that allows ample margin above the 100V transient specification of telecom standards. These drivers operate with an IC supply voltage of 8V to 12.6V, and consume only 2.75mA of supply current during typical switching operations. The MAX15018_/MAX15019_ provide 3A (typ) sink/source peak current per output and are capable of operating with large capacitive loads and with switching frequencies near 1MHz.

These drivers are intended to be used to drive the high-side MOSFET without requiring an isolation device such as an optocoupler or a drive transformer. The high-side driver is controlled by a TTL/CMOS logic signal referenced to ground and is powered by a bootstrap circuit formed by an integrated diode and an external capacitor. Undervoltage lockout (UVLO) protection is provided for both the high- and low-side driver supplies (BST and V_{DD}) and includes a UVLO hysteresis of 0.5V (typ).

The drivers are independently controlled and feature exceptionally fast switching times, very short propagation delays (35ns typ), and matched propagation delay-times (2ns typ) between drivers, making them ideally suited for high-frequency applications. Internal logic circuitry prevents shoot-through during output state changes and minimizes package power dissipation.

These devices are available with CMOS (V_{DD}/2) or TTL logic-level inputs. The MAX15018A/MAX15018B accept CMOS input logic levels, while the MAX15019A/MAX15019B accept TTL input logic levels. For both versions, the logic inputs are protected against voltage spikes up to +15V, regardless of V_{DD}. See the *Driver Logic Inputs (IN_H, IN_L)* section.

The MAX15018_/MAX15019_ are available with both high-side and low-side noninverting logic inputs or with noninverting high-side and inverting low-side logic inputs. See the *Functional Diagrams* and *Selector Guide*. The MAX15018A and MAX15019A are pin-for-pin replacements for the HIP2100IB and HIP2101IB, respectively.

The MAX15018_/MAX15019_ are available in a space-saving, high-power, 8-pin SO-EP package that can dissipate up to 1.95W at +70°C. All devices operate over the -40°C to +125°C automotive temperature range.

Undervoltage Lockout

Both the high- and low-side drivers feature separate UVLO protection that monitors each driver's input supply voltage (BST and V_{DD}). The low-side driver UVLO threshold (V_{DD_UVLO}) is referenced to GND and pulls both driver outputs low when V_{DD} falls below 7.3V (typ). The high-side driver UVLO threshold (V_{BST_UVLO}) is referenced to HS, and only pulls DH low when V_{BST} falls below 6.9V (typ) with respect to HS. After the IC is first energized, and once V_{DD} rises above its UVLO threshold, DL starts switching and either follows the IN_L logic input (MAX15018A/MAX15019A) or is inverted with reference to the IN_L logic input (MAX15018B/MAX15019B). At this time, the bootstrap capacitor is not charged, and DH does not switch since the BST-to-HS voltage is below V_{BST_UVLO}. Within a short time following engagement of low-side switching, C_{BST} charges through V_{DD} and causes V_{BST} to exceed V_{BST_UVLO}. DH then starts switching and follows IN_H. For synchronous buck and half-bridge converter topologies, the bootstrap capacitor can charge up in one cycle. Normal operation then begins in a few microseconds after the BST-to-HS voltage exceeds V_{BST_UVLO}. In the two-switch forward topology, C_{BST} takes more time (a few hundred microseconds) to charge and increase its voltage above V_{BST_UVLO}. The typical hysteresis for both UVLO thresholds is 0.5V. The bootstrap capacitor value should be selected carefully to avoid oscillations during turn-on and turn-off at the DH output. Choose a capacitor value 20 times greater than the total gate capacitance of the MOSFET. Use a low ESR-type X7R dielectric ceramic capacitor at BST (typically a 0.1µF ceramic is adequate) and a parallel combination of 1µF and 0.1µF ceramic capacitors from V_{DD} to GND. The high-side MOSFET's continuous on-time is limited due to the charge loss from the high-side driver's quiescent current. The maximum on-time is dependent on the size of C_{BST}, I_{BST} (190µA, max), and V_{BST_UVLO}.

Output Driver

The MAX15018_/MAX15019_ drivers contain low on-resistance p-channel and n-channel devices in a totem pole configuration for the driver output stage. This allows for rapid turn-on and turn-off of high gate-charge (Q_g) external switching MOSFETs.

The drivers exhibit low drain-to-source resistance (R_{DS_ON}), which decreases for higher values of V_{DD} and for lower operating temperatures. Lower R_{DS_ON} means higher source and sink currents from the IC, and results in faster switching speeds, since the external MOSFET gate capacitance will charge and discharge at a quicker rate. The peak source and sink current provided by the drivers is typically 3A.

Propagation delay from the logic inputs to the driver outputs is matched to within 8ns (max) between the low-side and high-side drivers. Turn-on and turn-off propagation delays are typically 35ns and 36ns. See Figure 1. The internal drivers also contain break-before-make logic to eliminate shoot-through conditions that would cause unnecessarily high operating supply currents, efficiency reduction, and voltage spikes at V_{DD}.

Voltage at DL is approximately equal to V_{DD} when in a high state, and zero when in a low state. Voltage from DH to HS is approximately equal to V_{DD} minus the diode drop of the integrated bootstrap diode when in a high state, and zero when in a low state. The high-side MOSFET's continuous on-time is limited due to the charge loss from the high-side driver's quiescent current. The maximum on-time is dependent on the size of the bootstrap capacitor (C_{BST}), I_{BST} (190µA max), and V_{BST_UVLO}.

Integrated Bootstrap Diode

An integrated diode between V_{DD} and BST is used in conjunction with an external bootstrap capacitor (C_{BST}) to provide the voltage required to turn on the high-side MOSFET (see the *Typical Operating Circuit*). The internal diode charges the bootstrap capacitor from V_{DD} when the low-side switch is on, and isolates V_{DD} when HS is pulled high when the high-side driver turns on. The internal bootstrap diode has a typical forward voltage drop of 0.9V and has a 40ns (typ) turn-off/-on time. The turn-off time (reverse recovery time) depends on the reverse-recovery current and can be as low as 10ns. If a lower diode voltage-drop between V_{DD} and BST is needed, connect an external Schottky diode between V_{DD} and BST.

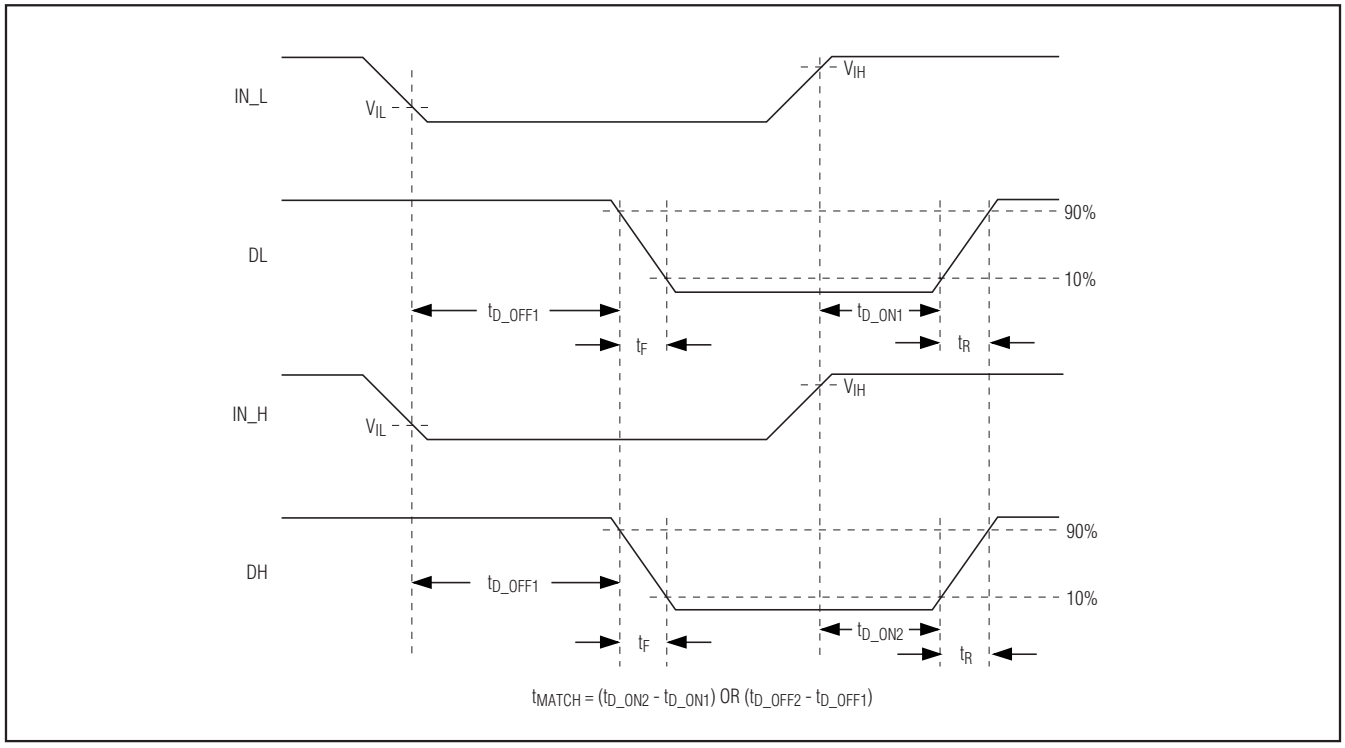

Figure 1. Timing Characteristics of Logic Inputs (MAX15018A/MAX15019A)

125V/3A, High-Speed, Half-Bridge MOSFET Drivers

Bootstrap Capacitor

The bootstrap capacitor is used to ensure adequate charge is available to switch the high-side MOSFET. This capacitor is charged from V_{DD} through the internal bootstrap diode when the low-side MOSFET is on. The bootstrap capacitor value should be selected carefully to avoid oscillations during turn-on and turn-off at the DH output. Choose a capacitor value approximately 20 times greater than the total gate capacitance of the MOSFET being switched. Use a low-ESR, X7R-type dielectric ceramic capacitor (typically a 0.1µF ceramic is adequate). The high-side MOSFET's continuous on-time is limited due to the charge loss from the high-side driver's quiescent current. The maximum on-time is dependent on the size of C_{BST}, I_{BST} (190µA max), and V_{BST_UVLO}. Note that the bootstrap capacitor requires time to charge up to V_{DD}, according to the time constant of the charging loop through the lower MOSFET (see the *Typical Operating Circuit*). Ensure that the lower MOSFET is on for at least the minimum time required to charge C_{BST}.

Driver Logic Inputs (IN_H, IN_L)

The MAX15018_ are CMOS (V_{DD}/2) logic-input drivers, and the MAX15019_ are TTL-compatible logic-input drivers. The required logic-input levels are independent of V_{DD}. For example, the IC can be powered by a 10V supply while the logic inputs are provided from 12V CMOS logic. Additionally, the logic inputs are protected against voltage spikes up to 15V, regardless of V_{DD} voltage. The TTL and CMOS logic inputs have 400mV and 1.6V hysteresis, respectively, to avoid double pulsing during signal transition. The logic inputs are high-impedance pins (500kΩ typ) and should not be left unconnected to ensure the input logic state is at a known level. With the logic inputs unconnected, the DH and DL outputs pull low as V_{DD} rises up above the UVLO threshold. The PWM output from the controller must assume a proper state while powering up the device.

Applications Information

Supply Bypassing and Grounding

Careful attention is required when choosing the bypassing and grounding scheme of the MAX15018_/MAX15019_. Peak supply and output currents may exceed 6A when both drivers are simultaneously driving large external capacitive loads in phase. Supply drops and ground shifts create forms of negative feedback for inverterting topologies and may degrade the delay and transition times. Ground shifts due to insufficient device grounding may also disturb other circuits sharing the same AC ground return path. Any series inductance in the V_{DD}, DH, DL, and/or GND paths can cause oscillations due to the very high di/dt when switching the MAX15018_/MAX15019_ with any capacitive load. Place one or more 0.1µF ceramic capacitors in parallel from V_{DD} to GND as close as possible to the device to bypass the input supply. Use a ground plane to minimize ground return resistance and series inductance. Place the external MOSFETs as close as possible to the MAX15018_/MAX15019_ to reduce trace length and further minimize board inductance and AC path resistance.

Power Dissipation

Power dissipation in the MAX15018_/MAX15019_ is primarily due to power loss in the internal boost diode and the internal nMOS and pMOS FETS. For capacitive loads, the total power dissipation for the device is:

$$P_D = (C_L \times V_{DD}^2 \times f_{SW}) + (I_{VDDO} + I_{BSTO}) \times V_{DD}$$

where C_L is the combined capacitive load at DH and DL, V_{DD} is the supply voltage, and f_{SW} is the switching frequency of the IC. P_D includes the power dissipated in the internal bootstrap diode (P_{DIODE}). The internal power dissipation reduces by P_{DIODE}, if an external bootstrap Schottky diode is used. The power dissipation in the internal boost diode (when driving a capacitive load) will be the charge through the diode per switching period multiplied by the maximum diode forward voltage drop (V_F = 1V) as given in the following equation.

$$P_{DIODE} = C_{DH} \times (V_{DD} - 1) \times f_{SW} \times V_F$$

where C_{DH} is the capacitive load at DH, V_{DD} is the supply voltage, f_{SW} is the switching frequency of the converter, V_F is the maximum diode forward voltage drop.

The total power dissipation when using the internal boost diode will be P_D and, when using an external Schottky diode, will be P_D - P_{DIODE}. The total power dissipated in the device must be kept below the maximum of 1.95W for the 8-pin SO with exposed pad at T_A = +70°C ambient.

Layout Information

The MAX15018_/MAX15019_ drivers source and sink large currents to create very fast rise and fall edges at the gates of the switching MOSFETs. The high di/dt can cause unacceptable ringing if the trace lengths and impedances are not well controlled. Use the following PCB layout guidelines when designing with the MAX15018_/MAX15019_:

- It is important that the V_{DD} voltage (with respect to ground) or BST voltage (with respect to HS) does not exceed 15V. Voltage spikes higher than 15V from V_{DD} to GND or from BST to HS can damage the device. Place one or more low-ESL 0.1µF decoupling ceramic capacitors from V_{DD} to GND and from BST to HS as close as possible to the part. The ceramic decoupling capacitors should be at least 20 times the gate capacitance being driven.
- There are two AC current loops formed between the IC and the gate of the MOSFET being driven. The MOSFET looks like a large capacitance from gate to source when the gate is being pulled low. The active current loop is from the MOSFET driver output (DL or DH) to the MOSFET gate, to the MOSFET source, and to the return terminal of the MOSFET driver (either GND or HS). When the gate of the MOSFET is being pulled high, the active current loop is from the MOSFET driver output, (DL or DH), to the MOSFET gate, to the MOSFET source, to the return terminal of the drivers decoupling capacitor, to the positive terminal of the decoupling capacitor, and to the supply connection of the MOSFET driver. The decoupling capacitor will be either C_{BST} for the high-side MOSFET or the V_{DD} decoupling capacitor for the low-side MOSFET. Care must be taken to minimize the physical distance and the impedance of these AC current paths.
- Solder the exposed pad of the 8-pin SO-EP package to a large copper plane to achieve the rated power dissipation.

Typical Application Circuits

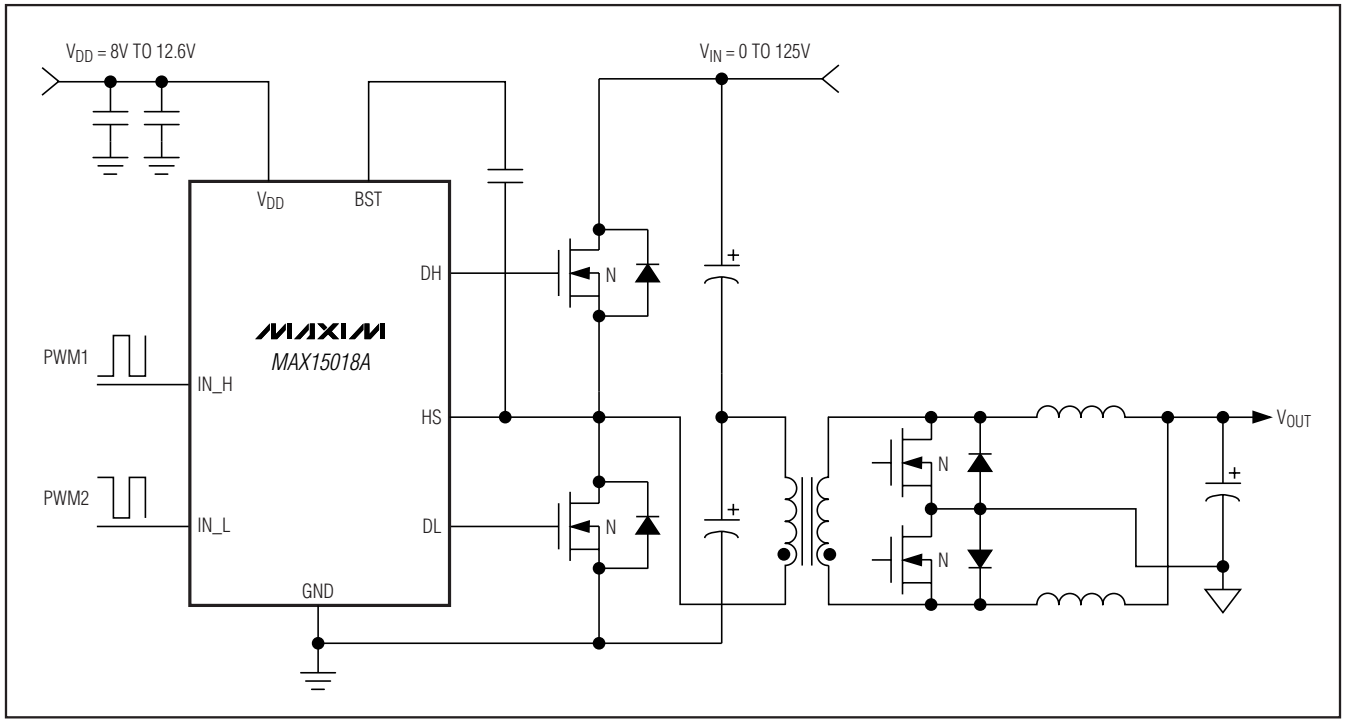

Figure 2. Half-Bridge Converter Application with Secondary-Side Synchronous Rectification

Typical Application Circuits (continued)

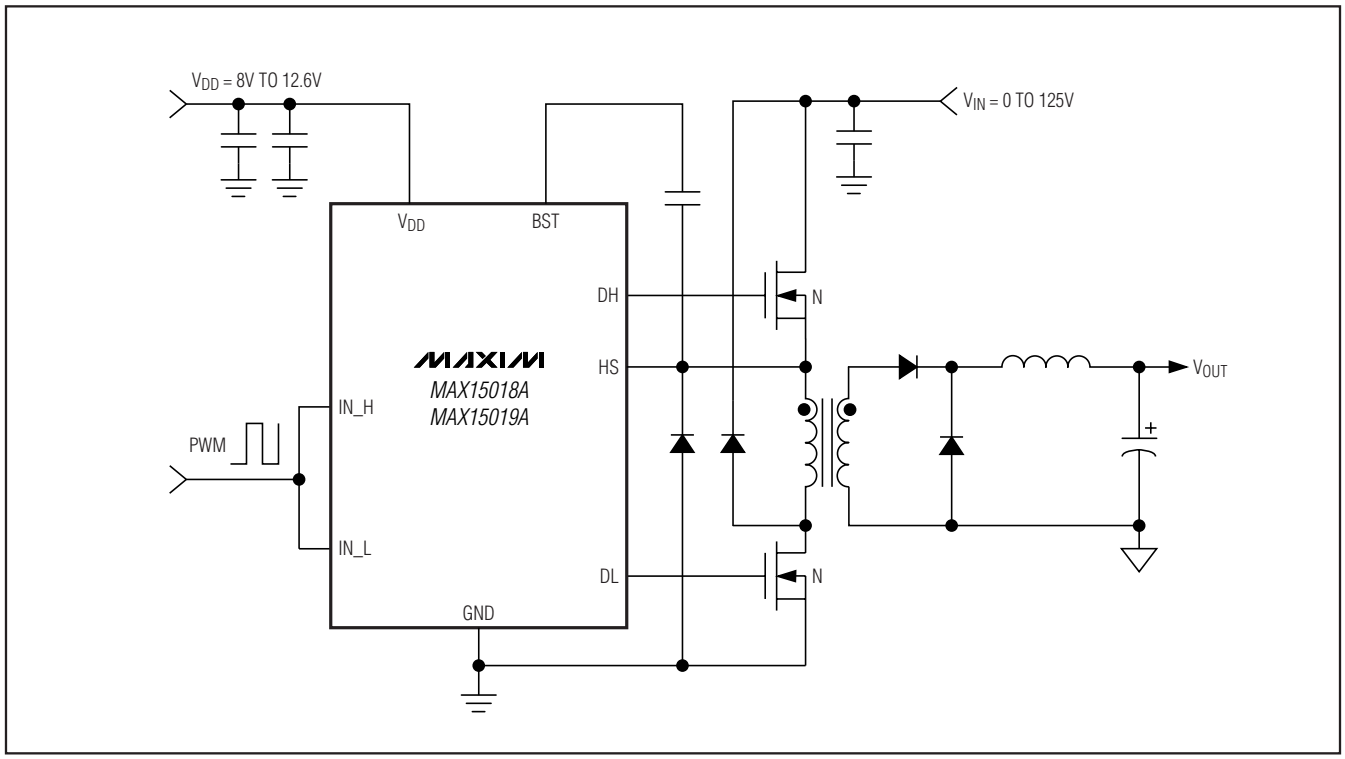

Figure 3. Two-Switch Forward Application

125V/3A, High-Speed, Half-Bridge MOSFET Drivers

Functional Diagrams

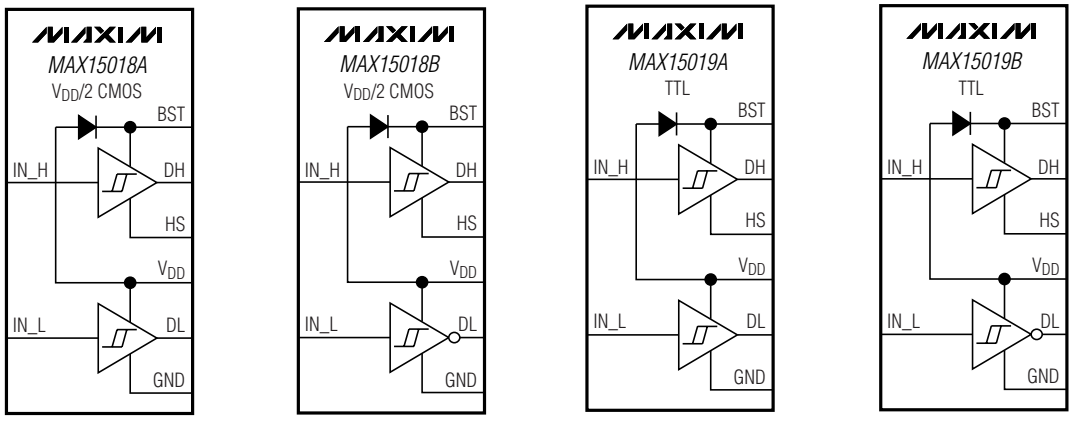

Selector Guide

PART	HIGH-SIDE DRIVER	LOW-SIDE DRIVER	LOGIC LEVEL	PIN COMPATIBLE
MAX15018AASA+	Noninverting	Noninverting	CMOS (V_{DD}/2)	HIP 2100IB
MAX15018BASA+	Noninverting	Inverting	CMOS (V_{DD}/2)	—
MAX15019AASA+	Noninverting	Noninverting	TTL	HIP 2101IB
MAX15019BASA+	Noninverting	Inverting	TTL	—

Chip Information

PROCESS: BiCMOS

Package Information

For the latest package outline information and land patterns, go to **www.maxim-ic.com/packages**.

PACKAGE TYPE	PACKAGE CODE	DOCUMENT NO.
8 SO	S8E-14	**21-0111**

125V/3A, High-Speed, Half-Bridge MOSFET Drivers

Revision History

REVISION NUMBER	REVISION DATE	DESCRIPTION	PAGES CHANGED
0	5/08	Initial release	—
1	9/08	Removed future product asterisk for the MAX15018B.	1

Maxim cannot assume responsibility for use of any circuitry other than circuitry entirely embodied in a Maxim product. No circuit patent licenses are implied. Maxim reserves the right to change the circuitry and specifications without notice at any time.

© 2008 Maxim Integrated Products MAXIM is a registered trademark of Maxim Integrated Products, Inc.

AMEYA360
Components Supply Platform

Authorized Distribution Brand :

Website :

Welcome to visit www.ameya360.com

Contact Us :

- ### Address :

  401 Building No.5, JiuGe Business Center, Lane 2301, Yishan Rd
  Minhang District, Shanghai , China

- ### Sales :

  Direct +86 (21) 6401-6692

  Email amall@ameya360.com

  QQ 800077892

  Skype ameyasales1 ameyasales2

- ### Customer Service :

  Email service@ameya360.com

- ### Partnership :

  Tel +86 (21) 64016692-8333

  Email mkt@ameya360.com