350 mA, Constant Current Output Floating Buck Switching Converter for High Power LEDs

Check for Samples: LM3407

FEATURES

- **Input operating range 4.5V to 30V**
- **Output voltage range: $0.1V_{IN}$ to $0.9V_{IN}$**
- **Accurate constant current output**
- **Independent device enable (CMOS compatible) and PWM dimming control**
- **Converter switching frequency adjustable from 300 kHz to 1 MHz**
- **No external control loop compensation required**
- **Supports ceramic and low ESR output capacitors**
- **Input Under Voltage Lock Out (UVLO)**
- **Thermal shutdown protection**
- **MSOP-8 PowerPAD Package**

APPLICATIONS

- **LED Driver**
- **Constant Current Source**
- **Automotive Lighting**
- **General Illumination**
- **Industrial Lighting**

DESCRIPTION

The LM3407 is a constant current output floating buck switching converter designed to provide constant current to high power LEDs. The device is ideal for automotive, industrial and general lighting applications. The LM3407 has an integrated power N-MOSFET that makes the application solution compact and simple to implement. An external 1% thick-film resistor allows the converter output voltage to adjust as needed to deliver constant current within 10% accuracy to a serially connected LED string of varying number and type. Converter switching frequency is adjustable from 300 kHz to 1 MHz. The LM3407 features a dimming input to enable LED brightness control by Pulse Width Modulation (PWM). Additionally, a separate enable pin allows for low power shutdown. An exposed pad MSOP-8 PowerPAD package provides excellent heat dissipation and thermal performance. Input UVLO and output open-circuit protection ensure a robust LED driver solution.

TYPICAL APPLICATION

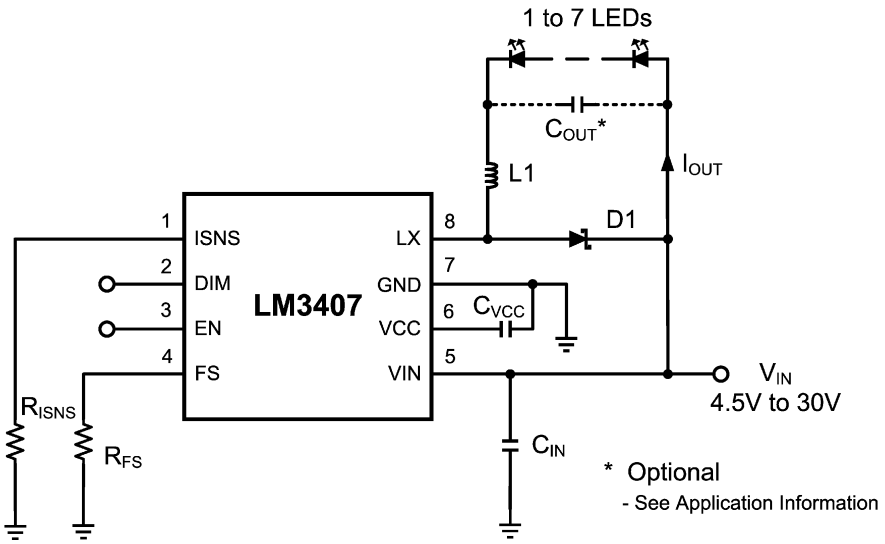

Please be aware that an important notice concerning availability, standard warranty, and use in critical applications of Texas Instruments semiconductor products and disclaimers thereto appears at the end of this data sheet.

All trademarks are the property of their respective owners.

PRODUCTION DATA information is current as of publication date. Products conform to specifications per the terms of the Texas Instruments standard warranty. Production processing does not necessarily include testing of all parameters.

Copyright © 2008–2013, Texas Instruments Incorporated

CONNECTION DIAGRAM

Top View

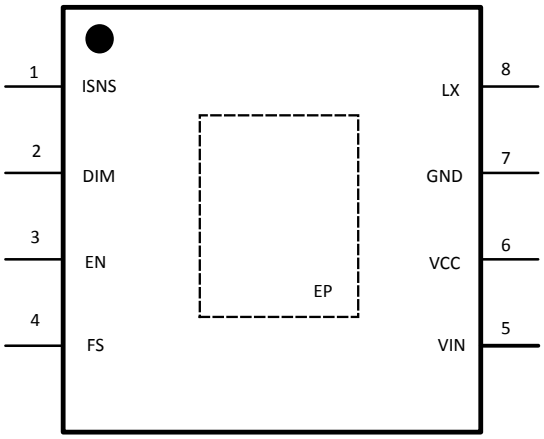

Figure 1. 8-Lead Plastic MSOP-8 PowerPAD Package
See Package Number DGN0008A

PIN DESCRIPTIONS

Pin	Name	Description	Application Information
1	ISNS	LED Current Sense pin	Connect resistor R_{ISNS} from this pin to ground for LED current sensing. The current sensing resistor should be placed close to this pin.
2	DIM	PWM Dimming Input pin	Applying logic level PWM signal to this pin controls the average brightness of the LED string.
3	EN	Device Enable pin	Applying logic high to this pin or leaving this pin open enables the switcher. When this pin is pulled low, the switcher is disabled and will enter low power shutdown mode.
4	FS	Switching Frequency Setting pin	Connect resistor R_{FS} from this pin to ground to set the switching frequency.
5	VIN	Input Voltage pin	The input voltage should be in the range of 4.5V to 30V.
6	VCC	Internal Regulator Output pin	This output pin should be bypassed by a ceramic capacitor with a minimum value of 1µF. High quality X5R or X7R ceramic capacitor is recommended.
7	GND	Device Ground pin	This pin should be connected to the system ground.
8	LX	Drain of N-MOSFET Switch	Connect this pin to the output inductor and anode of the Schottky diode.
EP	GND	Thermal Pad	The bottom pad should be connected to ground. For good thermal performance, place 4 to 6 thermal vias from EP to bottom layer PCB ground plane.

Copyright © 2008–2013, Texas Instruments Incorporated

These devices have limited built-in ESD protection. The leads should be shorted together or the device placed in conductive foam during storage or handling to prevent electrostatic damage to the MOS gates.

ABSOLUTE MAXIMUM RATINGS (1)

If Military/Aerospace specified devices are required, contact the Texas Instruments Sales Office/Distributors for availability and specifications.

		VALUE / UNIT
VIN to GND		-0.3V to 36V
VIN to GND (Transient)		42V (500 ms)
LX to GND		-0.3V to 36V
LX to GND (Transient)		-3V (2 ns), 42V (500 ms)
ISNS, FS, DIM, EN to GND		-0.3V to 7V
ESD Rating Human Body Model (2)		2kV
Junction Temperature		150°C
Storage Temperature		−65°C to + 125°C
Soldering Information	Lead Temperature (Soldering, 10sec)	260°C
	Infrared or Convection (20sec)	235°C

(1) Absolute Maximum Ratings are limits beyond which damage to the device may occur. Operating Ratings are conditions under which operation of the device is intended to be functional. For specifications and test conditions, see the Electrical Characteristics.
(2) The human body model is a 100pF capacitor discharged through a 1.5kΩ resistor into each pin.

RECOMMENDED OPERATING CONDITIONS

	VALUE / UNIT
V_{IN}	4.5V to 30V
Junction Temperature Range	−40°C to + 125°C
Thermal Resistance (θ_{JA}) (1)	50°C/W

(1) θ_{JA} of 50°C/W with thermal pad, EP soldered to a minimum of 2 square inches of 1 oz. Copper on the top or bottom PCB layer.

ELECTRICAL CHARACTERISTICS

V_{IN} = 12V unless otherwise indicated. Typical and limits appearing in plain type apply for $T_A = T_J$ = 25°C (Note 4). Limits appearing in **boldface** type apply over full Operating Temperature Range. Datasheet min/max specification limits are specified by design, test, or statistical analysis.

Parameter		Test Conditions	Min	Typ	Max	Units
SYSTEM PARAMETERS						
I_{IN}	Operating Input Current	4.5V ≤ V_{IN} ≤ 30V	**0.58**	0.78	**0.98**	mA
		V_{EN} = 5V, V_{PWM} = 5V, LX = open				
I_Q	Quiescent Input current	4.5V ≤ V_{IN} ≤ 30V	**0.20**	0.27	**0.39**	mA
		V_{EN} = 5V, V_{PWM} = 0V				
I_{SHUT}	Shutdown Input Current	V_{EN} = 0V	**36**	48	**60**	µA
V_{UVLO}	Input Under Voltage Lock-out Threshold	V_{IN} Rising		3.6	**4.5**	V
$V_{UVLO-HYS}$	UVLO Hysteresis	V_{IN} Falling		200		mV
V_{EN_H}	EN pin HIGH Threshold	V_{EN} Rising		1.9	**2.4**	V
V_{EN_L}	EN pin LOW Threshold	V_{EN} Falling	**1.3**	1.75		V
V_{DIM_H}	DIM pin HIGH Threshold	V_{DIM} Rising		1.9	**2.4**	V
V_{DIM_L}	DIM pin LOW Threshold	V_{DIM} Falling	**1.3**	1.75		V
f_{SW}	Switching Frequency	R_T = 80 kΩ		500		kHz
		R_T = 40 kΩ		1000		
t_{ON-MIN}	Minimum On-time			200		ns
T_{SD}	Thermal Shutdown Threshold			165		°C
T_{SD-HYS}	Thermal Shutdown Hysteresis			25		°C
INTERNAL VOLTAGE REGULATOR						
V_{CC}	VCC Regulator Output Voltage (1)	V_{IN} = 12V		4.5		V
N-MOSFET DRIVER						
$R_{DS(ON)}$	Main Switch ON Resistance	I_{sink} = 80mA		0.77	**1.45**	Ω
CONTROL LOOP						
A_{EA}	Error Amp Open Loop Gain			60		dB

(1) V_{CC} provides self bias for the internal gate drive and control circuits. Device thermal limitations limit external loading to the pin.

Copyright © 2008–2013, Texas Instruments Incorporated

TYPICAL PERFORMANCE CHARACTERISTICS

Unless otherwise specified, all curves shown are taken in typical application at V_{IN} = 12V, T_A = 25°C, and I_{LED} = 350 mA (driving two power LEDs).

Output Current vs Input Voltage (T_A = -40°C)

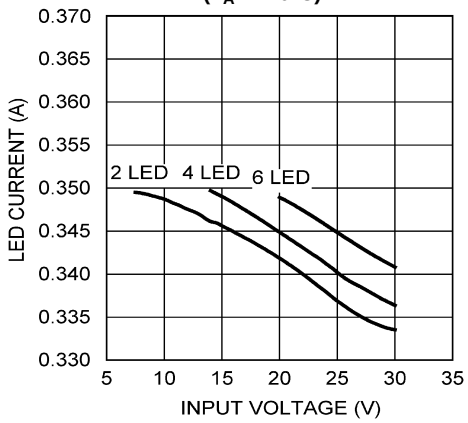

Figure 2.

Output Current vs Input Voltage (T_A = 25°C)

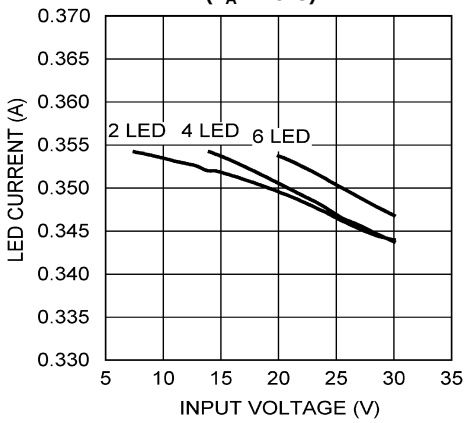

Figure 3.

Output Current vs Input Voltage (T_A = 125°C)

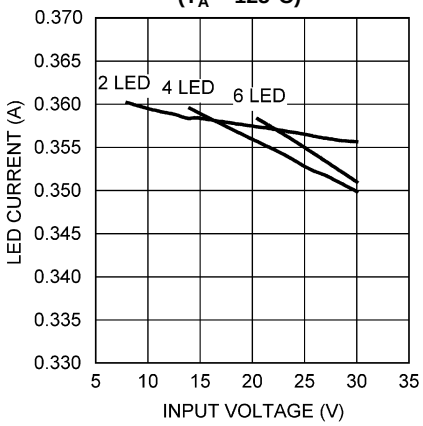

Figure 4.

Efficiency vs Input Voltage (T_A = -40°C)

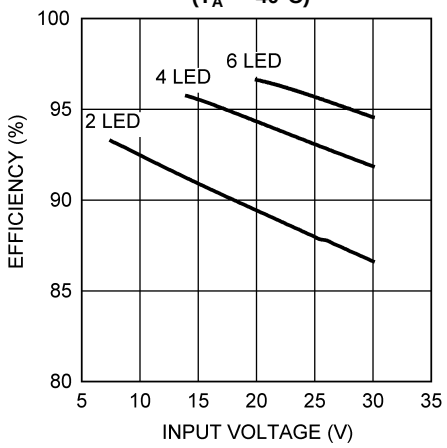

Figure 5.

Efficiency vs Input Voltage (T_A = 25°C)

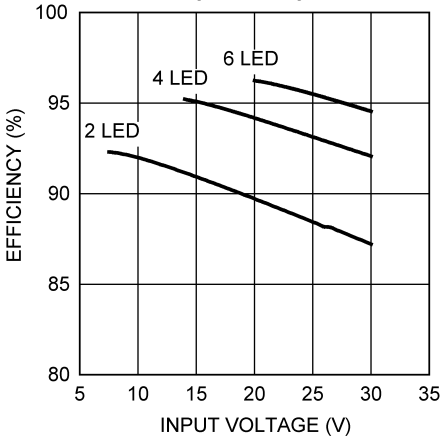

Figure 6.

Efficiency vs Input Voltage (T_A = 125°C)

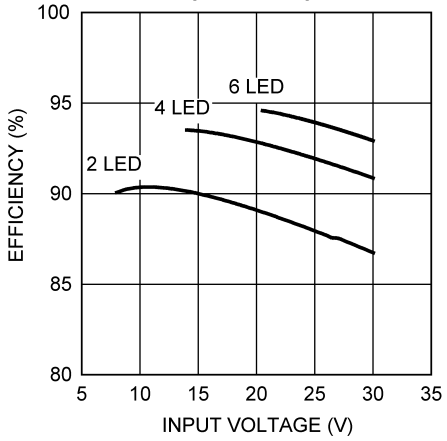

Figure 7.

Copyright © 2008–2013, Texas Instruments Incorporated

TYPICAL PERFORMANCE CHARACTERISTICS (continued)

Unless otherwise specified, all curves shown are taken in typical application at V_{IN} = 12V, T_A = 25°C, and I_{LED} = 350 mA (driving two power LEDs).

Switch On Time vs Input Voltage

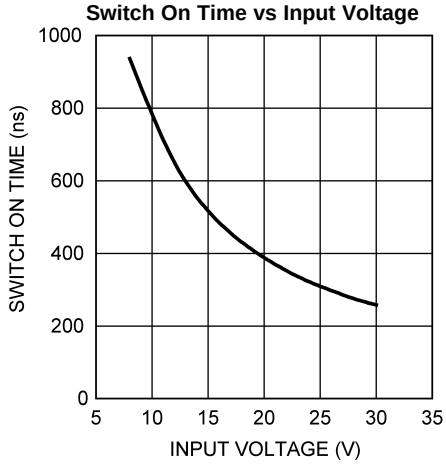

Figure 8.

Operating Input Current vs Input Voltage

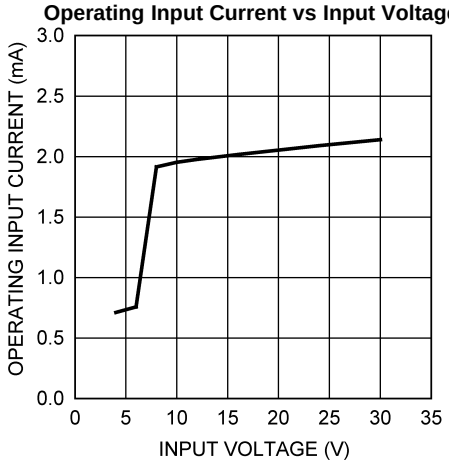

Figure 9.

VCC Voltage vs Input Voltage

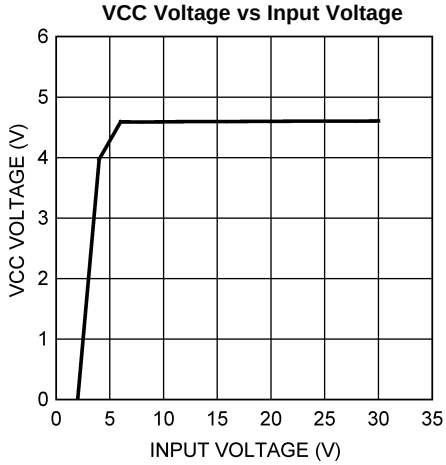

Figure 10.

Output Current vs R_{ISNS}

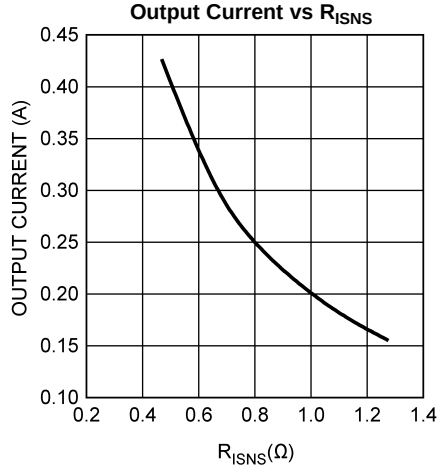

Figure 11.

Switching Frequency vs R_{FS}

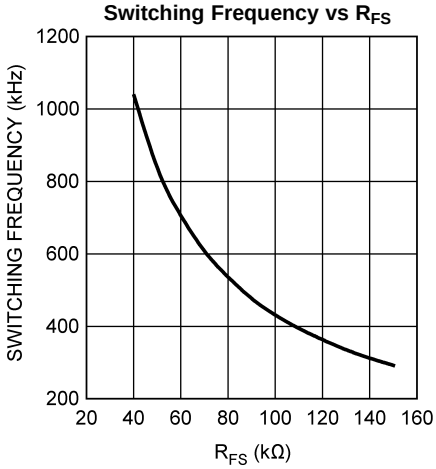

Figure 12.

Continuous Mode Operation (V_{IN} = 12V, L = 33µH, f_{SW} = 1MHz)

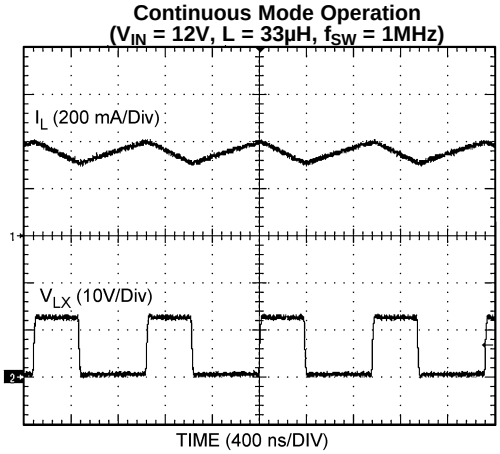

Figure 13.

Copyright © 2008–2013, Texas Instruments Incorporated

TYPICAL PERFORMANCE CHARACTERISTICS (continued)

Unless otherwise specified, all curves shown are taken in typical application at V_{IN} = 12V, T_A = 25°C, and I_{LED} = 350 mA (driving two power LEDs).

Continuous Mode Operation (V_{IN} = 12V, L = 33µH, f_{SW} = 500kHz)

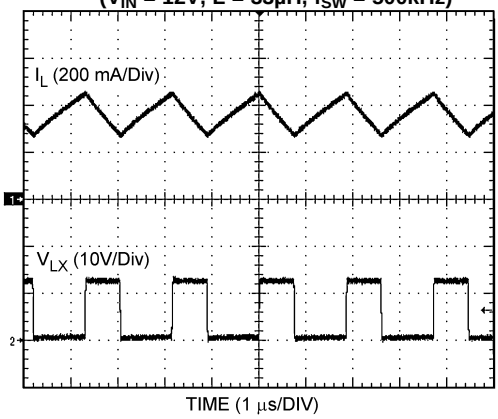

Figure 14.

Continuous Mode Operation (V_{IN} = 24V, L = 33µH, f_{SW} = 1MHz)

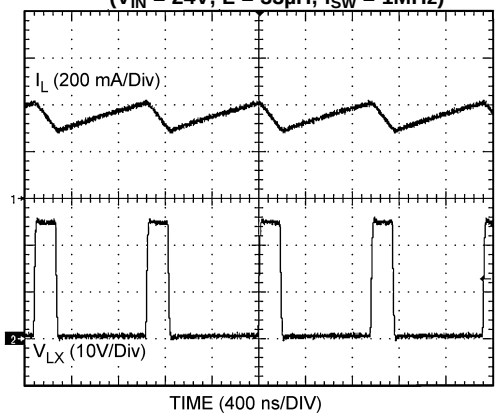

Figure 15.

Continuous Mode Operation (V_{IN} = 24V, L = 33µH, f_{SW} = 500kHz)

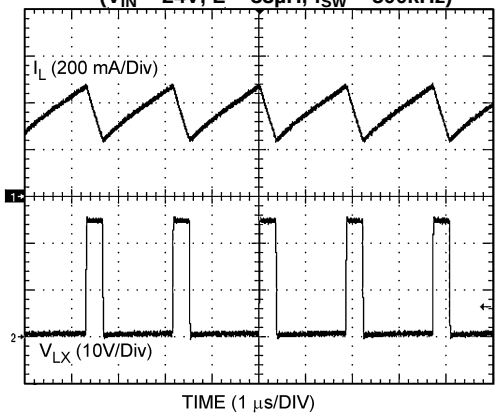

Figure 16.

DIM Pin Enable Transient (V_{IN} = 12V, L = 33µH, f_{SW} = 1MHz)

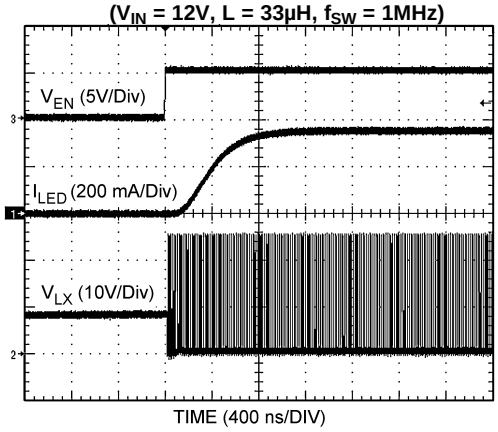

Figure 17.

DIM Pin Disable Transient (V_{IN} = 12V, L = 33µH, f_{SW} = 1MHz)

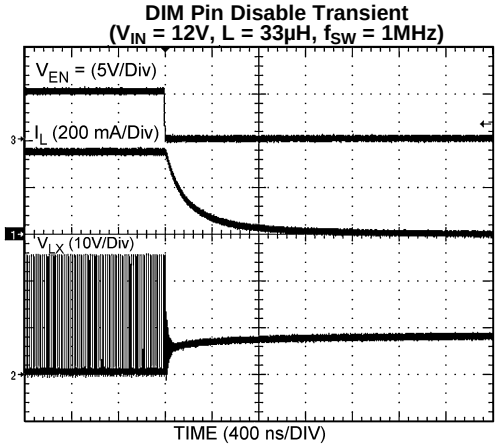

Figure 18.

SIMPLIFIED FUNCTIONAL BLOCK DIAGRAM

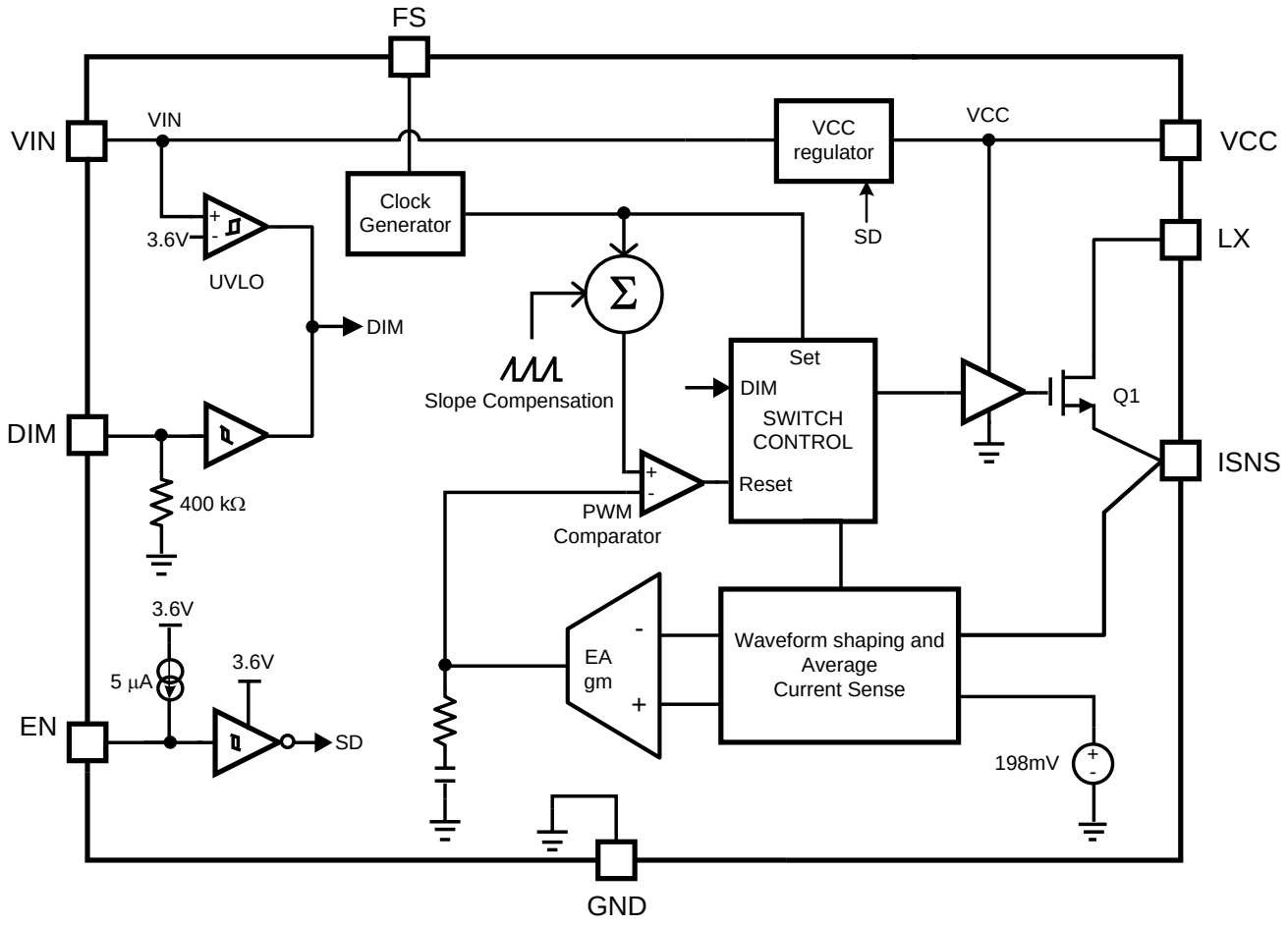

FUNCTIONAL DESCRIPTION

OVERVIEW

The LM3407 is a constant current output floating buck switching converter with wide input voltage range and low feedback current sense reference voltage. These characteristics make the LM3407 an efficient solution to provide constant current to high power LEDs. The device is ideal for automotive, industrial and general lighting applications where high power LEDs are used as the lighting source. The LM3407 has an integrated power N-MOSFET that makes the application solution compact and simple to implement. An external 1% thick-film resistor allows the converter output voltage to adjust as needed to deliver constant current within 10% accuracy to a serially connected LED string of varying number and type. Converter switching frequency is adjustable from 300 kHz to 1 MHz. The LM3407 features a dimming input to enable LED brightness control by Pulse Width Modulation (PWM). Additionally, a separate enable pin allows for low power shutdown. An exposed pad MSOP-8 PowerPAD package provides excellent heat dissipation and thermal performance. Input UVLO and output open-circuit protection ensure a robust LED driver solution.

FLOATING BUCK SWITCHING CONVERTER

The LM3407 is designed for floating buck configuration. Different from conventional buck converters, a low side power N-MOSFET is used. The floating buck configuration simplifies the driver stage design and reduces the die size of the power MOSFET. Additionally, the connections of the power diode, inductor and output capacitor are switched to ground with a ground referenced power switch, Q1. The extraction of inductor current information can be easily realized by a simple current sensing resistor. These benefits combine to provide a high efficiency, low cost, and reliable solution for LED lighting applications.

 Copyright © 2008–2013, Texas Instruments Incorporated

The operation of the LM3407 constant current output floating buck converter is explained below. With the internal switch Q1 turned ON, current flows through the inductor L1 and the LED array. Energy is also stored in the magnetic field of the inductor during the ON cycle. The current flowing through R_{ISNS} during the ON cycle is monitored by the Average Current Sensing block. The switch will remain ON until the average inductor current equals 198mV / R_{ISNS}. When the switch is turned OFF, the magnetic field starts to collapse and the polarity of the inductor voltage reverses. At the same time, the diode is forward biased and current flows through the LED, releasing the energy stored in the inductor to the output. True average output current is achieved as the switching cycle continuously repeats and the Average Current Sensing block controls the ON duty cycle. A constant current output floating buck converter only works in Continuous Conduction Mode (CCM); if the converter enters Discontinuous Conduction Mode (DCM) operation, the current regulation will deteriorate and the accuracy of LED current cannot be maintained. The operating waveforms for the typical application circuit are shown in Figure 19.

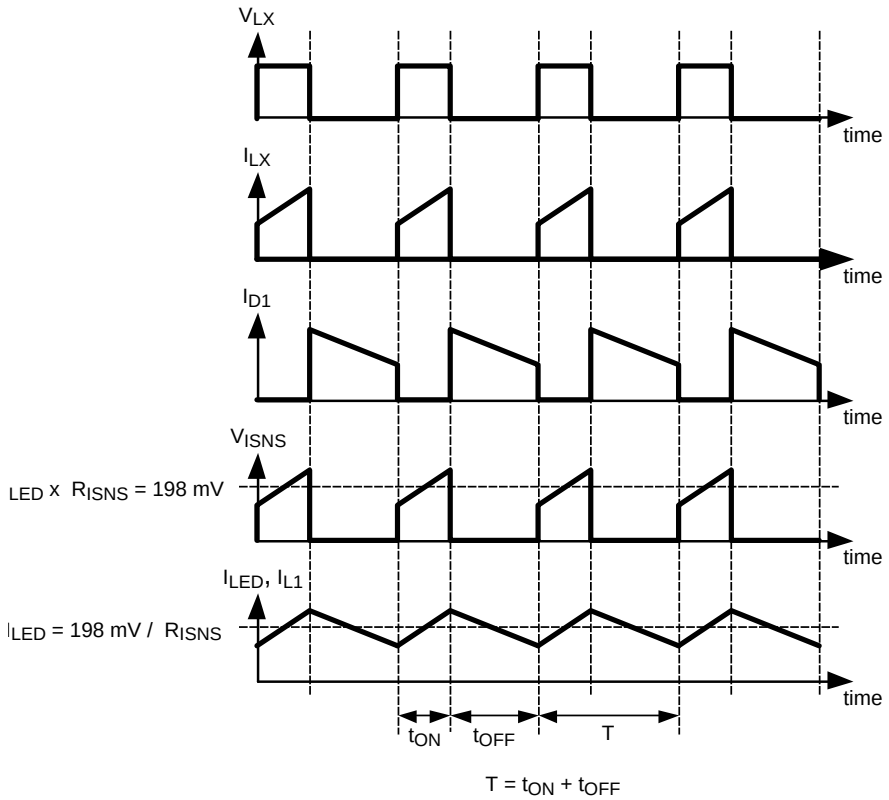

Figure 19. Operating Waveforms of a Floating Buck Converter

PULSE LEVEL MODULATION (PLM)

The LM3407 incorporates the innovative Pulse Level Modulation technique. With an external 1% thick film resistor connected to the ISNS pin, the converter output voltage can adjust automatically as needed to deliver constant current within 10% accuracy to a serially connected LED string of different number and type. Pulse Level Modulation is a novel method to provide precise constant current control with high efficiency. It allows the use of low side current sensing and facilitates true average output current regulation regardless of the input voltage and inductor value. Pulse Level Modulation can be treated as a process that transforms a trapezoidal pulse chain into a square pulse chain with an amplitude equal to the center of inductor current ramp. Figure 20 shows the waveform of the converter in steady state. In the figure, I_{L1} is the inductor current and I_{LX} is the switch current into the LX pin. V_{ISNS} is the voltage drop across the current sensing resistor R_{ISNS}. V_{MSL} is the center of the inductor current ramp and is a reference pulse that is synchronized and has an identical pulse width to V_{ISNS}.

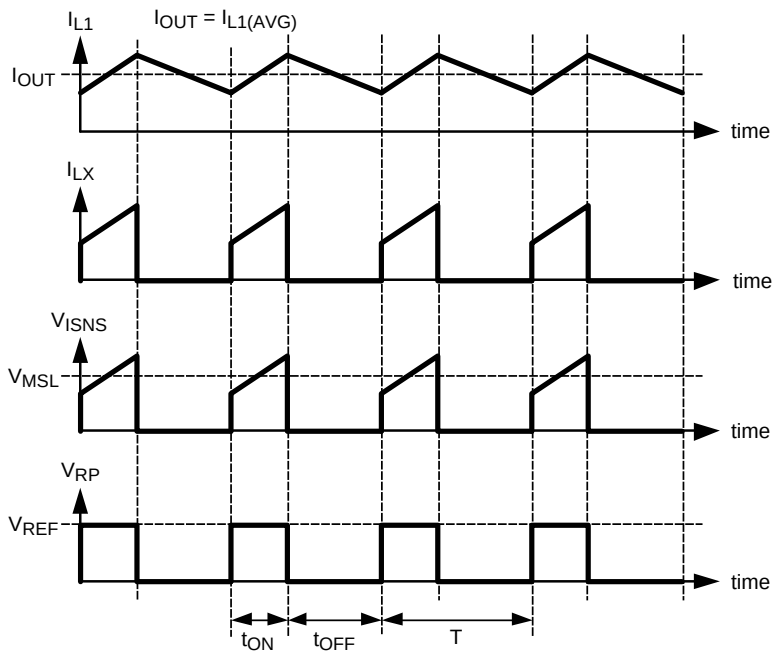

Figure 20. LM3407 Switching Waveforms

The switching frequency and duty ratio of the converter equal:

$$D = \frac{t_{ON}}{t_{ON} + t_{OFF}}$$

and

$$f_{SW} = \frac{1}{t_{ON} + t_{OFF}} \tag{1}$$

By comparing the area of V_{ISNS} and V_{RP} over the ON period, an error signal is generated. Such a comparison is functionally equivalent to comparing the middle level of I_{SNS} to V_{RP} during the ON-period of a switching cycle. The error signal is fed to a PWM comparator circuit to produce the PWM control pulse to drive the internal power N-MOSFET. Figure 21 shows the implementation of the PWM switching signal. The error signal is fed to a PWM comparator circuit to produce the PWM control pulse to drive the internal power N-MOSFET. Figure 21 shows the implementation of the PWM switching signal.

In closed loop operation, the difference between V_{MSL} and V_{RP} is reflected in the changes of the switching duty cycle of the power switch. This behavior is independent of the inductance of the inductor and input voltage because for the same set of I_{OUT} * R_{ISNS}, ON time, and switching period, there exists only one V_{MSL}. Figure 22 shows two sets of current sense signals named V_{ISNS1} and V_{ISNS2} that have identical frequencies and duty cycles but different shapes of trapezoidal waveforms, each generating identical PWM signals.

Copyright © 2008–2013, Texas Instruments Incorporated

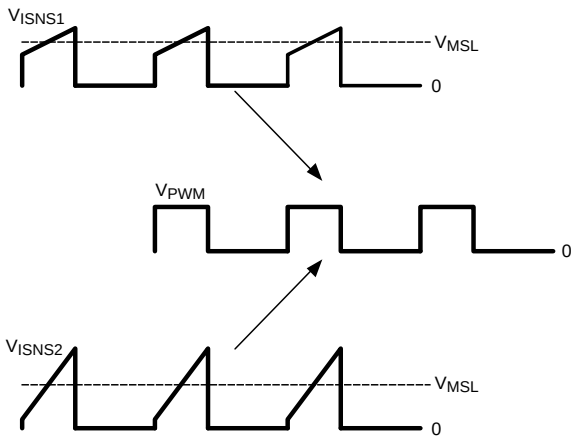

Figure 21. Pulse-Level Transformation

When V_{MSL} is higher than V_{REF}, the peak value of V_{RP}, the switching duty cycle of the power switch will be reduced to lower V_{MSL}. When V_{MSL} is lower than the peak value of V_{RP}, the switching duty cycle of the power switch will be increased to raise V_{MSL}. For example, when I_{OUT} is decreased, V_{MSL} will become lower than V_{REF}. In order to maintain output current regulation, the switching duty cycle of the power switch will be increased and eventually push up V_{MSL} until V_{MSL} equals V_{REF}. Since in typical floating buck regulators V_{MSL} is equal to I_{OUT} * R_{ISNS}, true average output current regulation can be achieved by regulating V_{MSL}. Figure 23 shows the waveforms of V_{ISNS} and V_{RP} under closed loop operation.

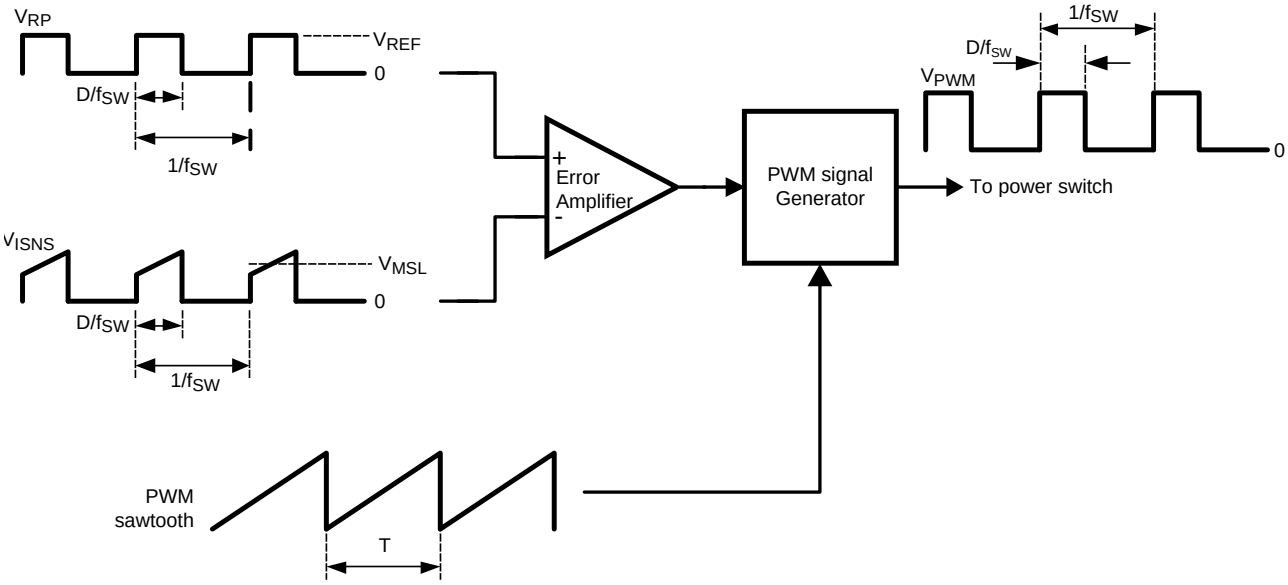

Figure 22. Implementation of the PWM Switching Signal

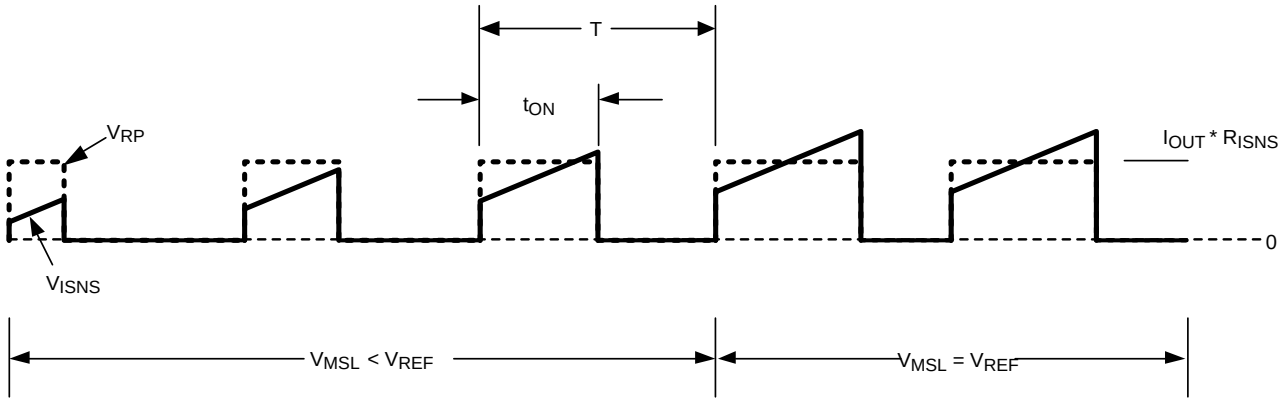

Figure 23. Waveforms of V_{ISNS} and V_{RP} Under Closed Loop Operation

INTERNAL VCC REGULATOR

The LM3407 has an internal 4.5V linear regulator. This regulated voltage is used for powering the internal circuitry only and any external loading at the VCC pin is not recommended. The supply input (V_{IN}) can be connected directly to an input voltage up to 30V. The VCC pin provides voltage regulated at 4.5V for $V_{IN} \leq 6V$. For $4.5V \leq V_{IN} \leq 6V$, VIN pin will be connected to VCC pin directly by an internal bypassing switch. For stability reason, an external capacitor C_{VCC} with at least 680 nF (1 µF recommended) must be connected to the VCC pin.

CLOCK GENERATOR

The LM3407 features an integrated clock generator to control the switching frequency of the converter, f_{SW}. An external resistor R_{FS}, connected to the FS pin and ground, determines the switching frequency. The oscillator frequency can be set in the range of 300 kHz to 1 MHz. The relationship between the frequency setting resistance and the oscillator frequency is described in the Application Information Section.

PWM DIMMING OF LED STRING

Dimming of LED brightness is achieved by Pulse Width Modulation (PWM) control of the LED current. Pulse Width Modulation control allows LED brightness to be adjusted while still maintaining accurate LED color temperature. The LM3407 accepts an external PWM dimming signal at the DIM pin. The signal is buffered before being applied to the internal switch control block responsible for controlling the ON/OFF of the power switch, Q1. The DIM pin is internally pulled low by a resistor and no LED current will be available when the DIM pin is floating or shorted to ground. Functionally, the DIM pin can also be used as an external device disable control. Device switching will be disabled if the DIM pin is not connected or tied to ground.

LOW POWER SHUTDOWN MODE

The LM3407 comes with a dedicated device enable pin, EN, for low power shutdown of the device. By putting the device in shutdown mode, most of the internal circuits will be disabled and the input current will reduced to below typically 50µA. The EN pin is internally pulled high by a 5µA current source. Connecting the EN pin to ground will force the device to enter low power shutdown mode. To resume normal operation, leave the EN pin open or drive with a logic high voltage.

INPUT UNDER-VOLTAGE LOCK-OUT (UVLO)

The LM3407 incorporates an input Under-Voltage Lock-Out (UVLO) circuit with hysteresis to keep the device disabled when the input voltage (V_{IN}) falls below the Lock-Out Low threshold, 3.4V typical. During the device power-up, internal circuits are held inactive and the UVLO comparator monitors the voltage level at the VIN pin continuously. When the VIN pin voltage exceeds the UVLO threshold, 3.6V typical, the internal circuits are then enabled and normal operation begins.

Copyright © 2008–2013, Texas Instruments Incorporated

APPLICATION INFORMATION

SWITCHING FREQUENCY SELECTION

The selection of switching frequency is based on the consideration of the conversion efficiency, size of the passive components, and the total solution cost. In general, increasing the switching frequency will allow the use of smaller external components but will decrease the conversion efficiency. Thus, the selection of switching frequency is a compromise between the system requirements and may vary from design to design. The LM3407 switching frequency can be set in the range from 300 kHz to 1 MHz by adjusting the value of R_{FS}. The switching frequency is inversely proportional to the value of R_{FS}. In order to ensure good operation stability, a resistor with 1% tolerance between 40 kΩ and 96 kΩ and with good thermal stability is suggested.

The switching frequency is estimated by the expression below:

$$f_{SW} = \frac{40\ \text{Meg}}{R_{FS}} + 40\ \text{in kHz} \tag{2}$$

In the equation, f_{SW} is the oscillator frequency and R_{FS} is the frequency setting resistance. The above equation is only valid for oscillator frequencies in the range of 300 kHz to 1 MHz, so the frequency setting resistance will be in the range of about 40 kΩ to 150 kΩ.

LED CURRENT SETTING

The LED current setting is important to the lifetime, reliability, and color temperature of the LED string. The LED current should be properly selected according to the characteristics of the LED used. Over-driving the LED array can cause the color temperature to shift and will shorten the lifetime of the LEDs. The output current of the LM3407 can be set by R_{ISNS}, which is calculated from the following equation:

$$R_{ISNS} = \frac{0.198V}{I_{OUT}} \tag{3}$$

To ensure the accuracy of the output current, a resistor with 1% tolerance should be used for R_{ISNS}. It is also important for the designer to ensure that the rated power of the resistor is not exceeded with reasonable margin. For example, when I_{OUT} is set to 350 mA, the total power dissipation on R_{ISNS} in steady state is $(0.35A)^2$ x 0.565Ω, which equals 69 mW, indicating a resistor of 1/8W power rating is appropriate.

INPUT AND OUTPUT CAPACITORS

The input capacitor supplies instantaneous current to the LM3407 converter when the internal power switch Q1 turns ON. The input capacitor filters the noise and transient voltage from the input power source. Using low ESR capacitors such as ceramic and tantalum capacitors is recommended. Similar to the selection criteria for the output capacitor, ceramic capacitors are the best choice for the input to the LM3407 due to their high ripple current rating, low ESR, and relatively small size compared to other types. A 4.7 µF X7R ceramic capacitor for the input capacitor is recommended

The output capacitor C_{OUT} is used to reduce LED current ripple, filter noise, and smooth output voltage. This capacitor should have low ESR and adequate capacitance. Excessively large output capacitances create long enable and disable times, which is particularly significant when a high dimming frequency is used. Since the loading and input conditions differ from design to design, a 2.2 µF X7R ceramic capacitor is a good initial selection. A DC voltage rating equal to or higher than twice the forward voltage of the LED string is recommended.

C_{OUT} is optional and can be omitted for applications where small brightness variation is acceptable. Omitting C_{OUT} also helps reduce the cost and board size of the converter. With the absence of C_{OUT}, the LED forward current equals the inductor current. In order to ensure proper operation of the converter the peak inductor current must not exceed the rated forward current of the LEDs. Otherwise the LEDs may be damaged.

Copyright © 2008–2013, Texas Instruments Incorporated

SELECTION OF INDUCTOR

In order to achieve accurate constant current output, the LM3407 is required to operate in Continuous Conduction Mode (CCM) under all operating conditions. In general, the magnitude of the inductor ripple current should be kept as small as possible. If the PCB size is not limited, higher inductance values result in better accuracy of the output current. However, in order to minimize the physical size of the circuit, an inductor with minimum physical outline should be selected such that the converter always operates in CCM and the peak inductor current does not exceed the saturation current limit of the inductor. The ripple and peak current of the inductor can be calculated as follows:

Inductor Peak to Peak Ripple Current:

$$I_{L(ripple)} = \frac{\left[V_{IN} - (n \times V_F) - 0.198\left(1 + \frac{1}{R_{ISNS}}\right)\right] \times (n \times V_F)}{L \times V_{IN} \times f_{SW}} \tag{4}$$

Peak Inductor Current:

$$I_{L(peak)} = \frac{0.198}{R_{ISNS}} + \frac{I_{L(ripple)}}{2}$$

where

- n is the number of LEDs in a string
- V_F is the forward voltage of one LED. (5)

The minimum inductance required for the specific application can be calculated by:

$$L_{min} = \frac{\left[V_{IN} - (n \times V_F) - 0.198 \times \left(1 + \frac{1}{R_{ISNS}}\right)\right] \times (R_{ISNS} \times n \times V_F)}{0.197 \times V_{IN} \times f_{SW}} \tag{6}$$

For applications with no output capacitor in place, the magnitude of the inductor ripple current should not be more than 20% of the average inductor current, which is equivalent to the output current, I_{OUT}. However, in some situations the physical size of the required inductor may be too large and thus not allowed. The output capacitor can help absorb this current ripple to significantly reduce the ripple component along the LED string. With an output capacitor C_{OUT} in place, the magnitude of the inductor ripple current can be relaxed to 80% of the output current. Figure 24 illustrates the relationship between I_{OUT}, $I_{L(peak)}$, and $I_{L(ripple)}$.

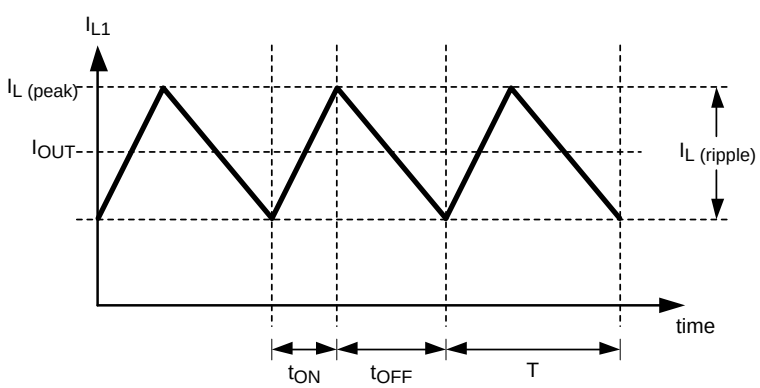

Figure 24. Relationship between I_{OUT}, $I_{L(peak)}$ and $I_{L(ripple)}$

Table 1 provides the suggested inductance of the inductor for 500 kHz and 1 MHz switching frequency operation with C_{OUT} = 4.7µF and $I_{L(ripple)}$ = 0.8 x I_{OUT}

Copyright © 2008–2013, Texas Instruments Incorporated

Table 1. Suggested Inductance Value of the Inductor

VIN / V	Number of LED						
	1	2	3	4	5	6	7
Inductor selection table for F_{SW} = 500 kHz, C_{OUT} = 4.7µF (1µF for 1 LED)							
5	22 µH						
10	22 µH	22 µH					
15	22 µH	22 µH	22 µH				
20	22 µH	33 µH	22 µH	22 µH	22 µH		
25	22 µH	33 µH	33 µH	22 µH	22 µH	22 µH	
30	22 µH	47 µH	33 µH	33 µH	33 µH	22 µH	22 µH
Inductor selection table for F_{SW} = 1 MHz, C_{OUT} = 4.7µF (1µF for 1 LED)							
5	22 µH						
10	22 µH	22 µH					
15	22 µH	22 µH	22 µH				
20	22 µH	22 µH	22 µH	22 µH	22 µH		
25	22 µH	33 µH	22 µH	22 µH	22 µH	22 µH	
30	22 µH	33 µH	33 µH	33 µH	22 µH	22 µH	22 µH

FREE-WHEELING DIODE

The LM3407 is a non-synchronous floating buck converter that requires an external free-wheeling diode to provide a path for recirculating current from the inductor to the LED array when the power switch is turned OFF. Selecting the free-wheeling diode depends on both the output voltage and current. The diode must have a rated reverse voltage higher than the input voltage of the converter and a peak current rating higher than the expected maximum inductor current. Using a schottky diode with a low forward voltage drop can reduce power dissipation and enhance conversion efficiency.

PRINTED CIRCUIT BOARD DESIGN

Since the copper traces of PCBs carry resistance and parasitic inductance, the longer the copper trace, the higher the resistance and inductance. These factors introduce voltage and current spikes to the switching nodes and may impair circuit performance. To optimize the performance of the LM3407, the rule of thumb is to keep the connections between components as short and direct as possible. Since true average current regulation is achieved by detecting the average switch current, the current setting resistor R_{ISNS} must be located as close as possible to the LM3407 to reduce the parasitic inductance of the copper trace and avoid noise pick-up. The connections between the LX pin, rectifier D1, inductor L1, and output capacitor C_{OUT} should be kept as short as possible to reduce the voltage spikes at the LX pin. It is recommended that C_{VCC}, the output filter capacitor for the internal linear regulator of the LM3407, be placed close to the VCC pin. The input filter capacitor C_{IN} should be located close to L1 and the cathode of D1. If C_{IN} is connected to the VIN pin by a long trace, a 0.1µF capacitor should be added close to VIN pin for noise filtering. In normal operation, heat will be generated inside the LM3407 and may damage the device if no thermal management is applied. For more details on switching power supply layout considerations see TI Lit NumberSNVA021: Layout Guidelines for Switching Power Supplies.

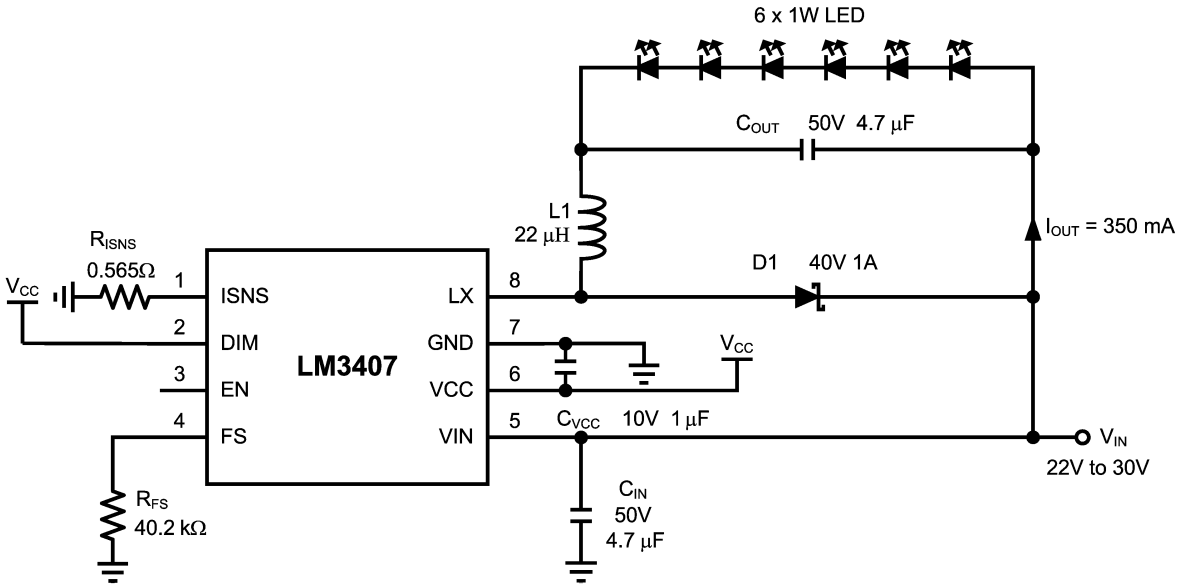

Figure 25. Typical Application Schematic for 6 LEDs

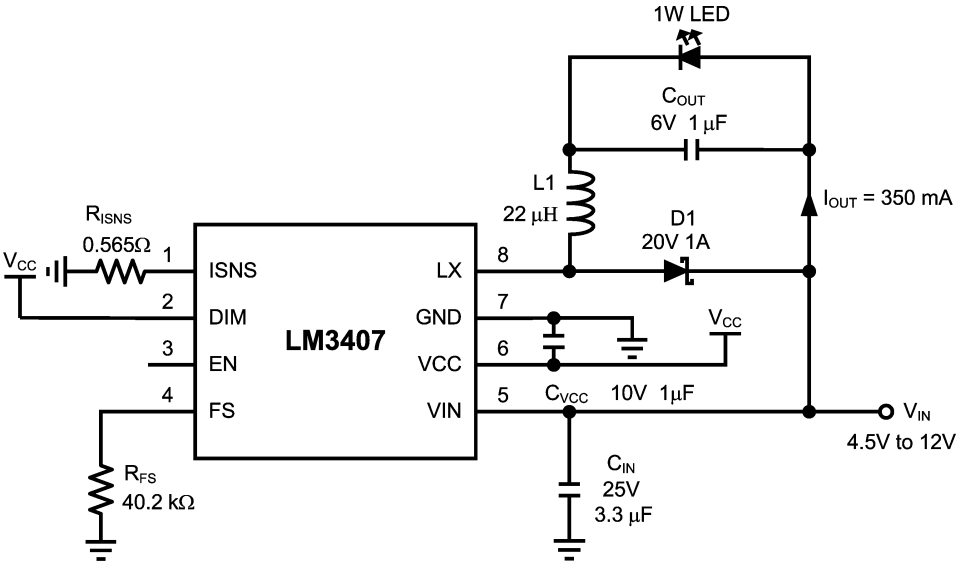

Figure 26. Typical Application Schematic for 1 LED

Copyright © 2008–2013, Texas Instruments Incorporated

REVISION HISTORY

Changes from Revision A (May 2013) to Revision B	Page
• Changed layout of National Data Sheet to TI format	16

PACKAGING INFORMATION

Orderable Device	Status (1)	Package Type	Package Drawing	Pins	Package Qty	Eco Plan (2)	Lead/Ball Finish	MSL Peak Temp (3)	Op Temp (°C)	Top-Side Markings (4)	Samples
LM3407MY/NOPB	ACTIVE	MSOP-PowerPAD	DGN	8	1000	Green (RoHS & no Sb/Br)	CU SN	Level-1-260C-UNLIM	-40 to 125	STZB	Samples
LM3407MYX/NOPB	ACTIVE	MSOP-PowerPAD	DGN	8	3500	Green (RoHS & no Sb/Br)	CU SN	Level-1-260C-UNLIM	-40 to 125	STZB	Samples

(1) The marketing status values are defined as follows:
ACTIVE: Product device recommended for new designs.
LIFEBUY: TI has announced that the device will be discontinued, and a lifetime-buy period is in effect.
NRND: Not recommended for new designs. Device is in production to support existing customers, but TI does not recommend using this part in a new design.
PREVIEW: Device has been announced but is not in production. Samples may or may not be available.
OBSOLETE: TI has discontinued the production of the device.

(2) Eco Plan - The planned eco-friendly classification: Pb-Free (RoHS), Pb-Free (RoHS Exempt), or Green (RoHS & no Sb/Br) - please check http://www.ti.com/productcontent for the latest availability information and additional product content details.
TBD: The Pb-Free/Green conversion plan has not been defined.
Pb-Free (RoHS): TI's terms "Lead-Free" or "Pb-Free" mean semiconductor products that are compatible with the current RoHS requirements for all 6 substances, including the requirement that lead not exceed 0.1% by weight in homogeneous materials. Where designed to be soldered at high temperatures, TI Pb-Free products are suitable for use in specified lead-free processes.
Pb-Free (RoHS Exempt): This component has a RoHS exemption for either 1) lead-based flip-chip solder bumps used between the die and package, or 2) lead-based die adhesive used between the die and leadframe. The component is otherwise considered Pb-Free (RoHS compatible) as defined above.
Green (RoHS & no Sb/Br): TI defines "Green" to mean Pb-Free (RoHS compatible), and free of Bromine (Br) and Antimony (Sb) based flame retardants (Br or Sb do not exceed 0.1% by weight in homogeneous material)

(3) MSL, Peak Temp. -- The Moisture Sensitivity Level rating according to the JEDEC industry standard classifications, and peak solder temperature.

(4) Multiple Top-Side Markings will be inside parentheses. Only one Top-Side Marking contained in parentheses and separated by a "~" will appear on a device. If a line is indented then it is a continuation of the previous line and the two combined represent the entire Top-Side Marking for that device.

Important Information and Disclaimer: The information provided on this page represents TI's knowledge and belief as of the date that it is provided. TI bases its knowledge and belief on information provided by third parties, and makes no representation or warranty as to the accuracy of such information. Efforts are underway to better integrate information from third parties. TI has taken and continues to take reasonable steps to provide representative and accurate information but may not have conducted destructive testing or chemical analysis on incoming materials and chemicals. TI and TI suppliers consider certain information to be proprietary, and thus CAS numbers and other limited information may not be available for release.

In no event shall TI's liability arising out of such information exceed the total purchase price of the TI part(s) at issue in this document sold by TI to Customer on an annual basis.

TAPE AND REEL INFORMATION

REEL DIMENSIONS

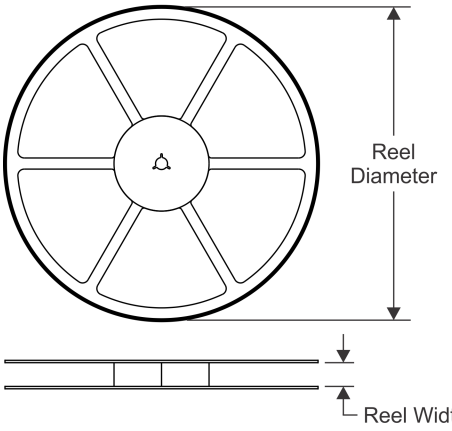

TAPE DIMENSIONS

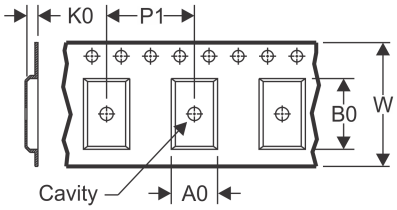

A0	Dimension designed to accommodate the component width
B0	Dimension designed to accommodate the component length
K0	Dimension designed to accommodate the component thickness
W	Overall width of the carrier tape
P1	Pitch between successive cavity centers

QUADRANT ASSIGNMENTS FOR PIN 1 ORIENTATION IN TAPE

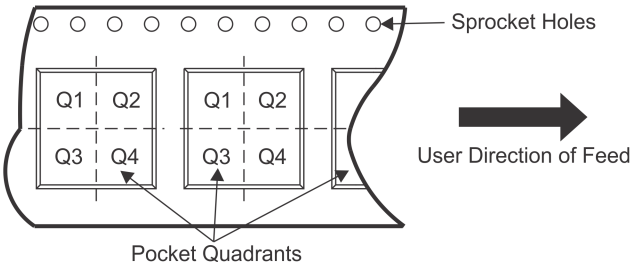

*All dimensions are nominal

Device	Package Type	Package Drawing	Pins	SPQ	Reel Diameter (mm)	Reel Width W1 (mm)	A0 (mm)	B0 (mm)	K0 (mm)	P1 (mm)	W (mm)	Pin1 Quadrant
LM3407MY/NOPB	MSOP-Power PAD	DGN	8	1000	178.0	12.4	5.3	3.4	1.4	8.0	12.0	Q1
LM3407MYX/NOPB	MSOP-Power PAD	DGN	8	3500	330.0	12.4	5.3	3.4	1.4	8.0	12.0	Q1

TAPE AND REEL BOX DIMENSIONS

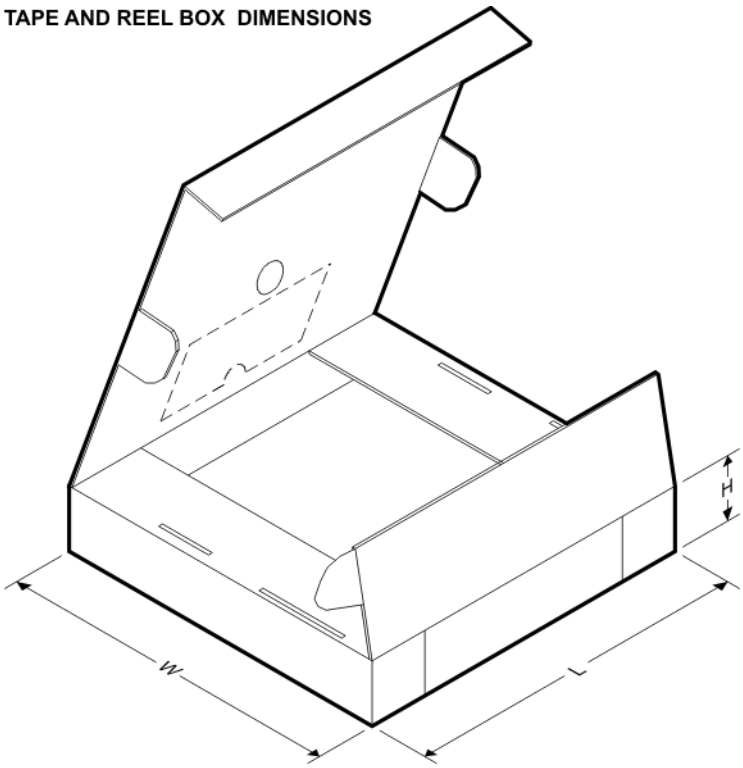

*All dimensions are nominal

Device	Package Type	Package Drawing	Pins	SPQ	Length (mm)	Width (mm)	Height (mm)
LM3407MY/NOPB	MSOP-PowerPAD	DGN	8	1000	210.0	185.0	35.0
LM3407MYX/NOPB	MSOP-PowerPAD	DGN	8	3500	367.0	367.0	35.0

DGN0008A

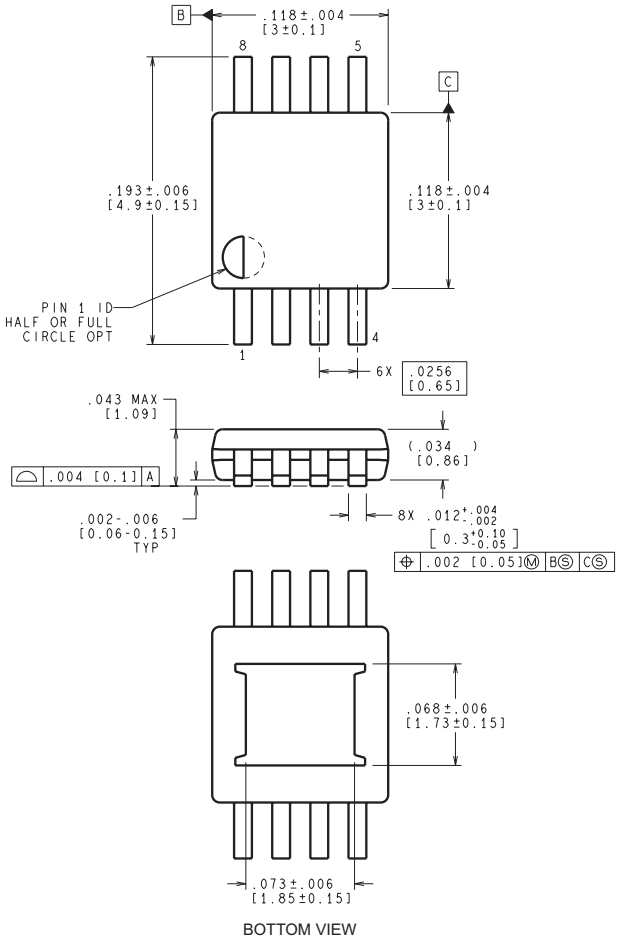

BOTTOM VIEW

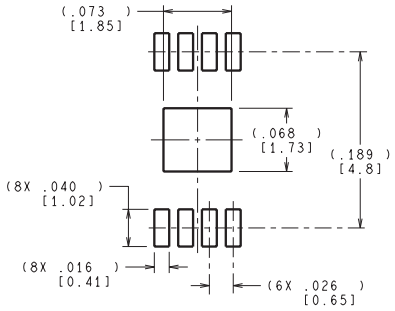

RECOMMENDED LAND PATTERN

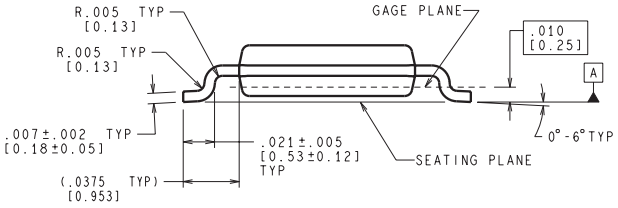

CONTROLLING DIMENSION IS INCH
VALUES IN [ ] ARE MILLIMETERS

MUY08A (Rev A)

IMPORTANT NOTICE

Texas Instruments Incorporated and its subsidiaries (TI) reserve the right to make corrections, enhancements, improvements and other changes to its semiconductor products and services per JESD46, latest issue, and to discontinue any product or service per JESD48, latest issue. Buyers should obtain the latest relevant information before placing orders and should verify that such information is current and complete. All semiconductor products (also referred to herein as “components”) are sold subject to TI’s terms and conditions of sale supplied at the time of order acknowledgment.

TI warrants performance of its components to the specifications applicable at the time of sale, in accordance with the warranty in TI’s terms and conditions of sale of semiconductor products. Testing and other quality control techniques are used to the extent TI deems necessary to support this warranty. Except where mandated by applicable law, testing of all parameters of each component is not necessarily performed.

TI assumes no liability for applications assistance or the design of Buyers’ products. Buyers are responsible for their products and applications using TI components. To minimize the risks associated with Buyers’ products and applications, Buyers should provide adequate design and operating safeguards.

TI does not warrant or represent that any license, either express or implied, is granted under any patent right, copyright, mask work right, or other intellectual property right relating to any combination, machine, or process in which TI components or services are used. Information published by TI regarding third-party products or services does not constitute a license to use such products or services or a warranty or endorsement thereof. Use of such information may require a license from a third party under the patents or other intellectual property of the third party, or a license from TI under the patents or other intellectual property of TI.

Reproduction of significant portions of TI information in TI data books or data sheets is permissible only if reproduction is without alteration and is accompanied by all associated warranties, conditions, limitations, and notices. TI is not responsible or liable for such altered documentation. Information of third parties may be subject to additional restrictions.

Resale of TI components or services with statements different from or beyond the parameters stated by TI for that component or service voids all express and any implied warranties for the associated TI component or service and is an unfair and deceptive business practice. TI is not responsible or liable for any such statements.

Buyer acknowledges and agrees that it is solely responsible for compliance with all legal, regulatory and safety-related requirements concerning its products, and any use of TI components in its applications, notwithstanding any applications-related information or support that may be provided by TI. Buyer represents and agrees that it has all the necessary expertise to create and implement safeguards which anticipate dangerous consequences of failures, monitor failures and their consequences, lessen the likelihood of failures that might cause harm and take appropriate remedial actions. Buyer will fully indemnify TI and its representatives against any damages arising out of the use of any TI components in safety-critical applications.

In some cases, TI components may be promoted specifically to facilitate safety-related applications. With such components, TI’s goal is to help enable customers to design and create their own end-product solutions that meet applicable functional safety standards and requirements. Nonetheless, such components are subject to these terms.

No TI components are authorized for use in FDA Class III (or similar life-critical medical equipment) unless authorized officers of the parties have executed a special agreement specifically governing such use.

Only those TI components which TI has specifically designated as military grade or “enhanced plastic” are designed and intended for use in military/aerospace applications or environments. Buyer acknowledges and agrees that any military or aerospace use of TI components which have ***not*** been so designated is solely at the Buyer's risk, and that Buyer is solely responsible for compliance with all legal and regulatory requirements in connection with such use.

TI has specifically designated certain components as meeting ISO/TS16949 requirements, mainly for automotive use. In any case of use of non-designated products, TI will not be responsible for any failure to meet ISO/TS16949.

Products		**Applications**	
Audio	www.ti.com/audio	Automotive and Transportation	www.ti.com/automotive
Amplifiers	amplifier.ti.com	Communications and Telecom	www.ti.com/communications
Data Converters	dataconverter.ti.com	Computers and Peripherals	www.ti.com/computers
DLP® Products	www.dlp.com	Consumer Electronics	www.ti.com/consumer-apps
DSP	dsp.ti.com	Energy and Lighting	www.ti.com/energy
Clocks and Timers	www.ti.com/clocks	Industrial	www.ti.com/industrial
Interface	interface.ti.com	Medical	www.ti.com/medical
Logic	logic.ti.com	Security	www.ti.com/security
Power Mgmt	power.ti.com	Space, Avionics and Defense	www.ti.com/space-avionics-defense
Microcontrollers	microcontroller.ti.com	Video and Imaging	www.ti.com/video
RFID	www.ti-rfid.com		
OMAP Applications Processors	www.ti.com/omap	**TI E2E Community**	e2e.ti.com
Wireless Connectivity	www.ti.com/wirelessconnectivity		

Mailing Address: Texas Instruments, Post Office Box 655303, Dallas, Texas 75265
Copyright © 2013, Texas Instruments Incorporated

AMEYA360
Components Supply Platform

Authorized Distribution Brand :

Website :

Welcome to visit www.ameya360.com

Contact Us :

- ## Address :

401 Building No.5, JiuGe Business Center, Lane 2301, Yishan Rd
Minhang District, Shanghai , China

- ## Sales :

Direct +86 (21) 6401-6692

Email amall@ameya360.com

QQ 800077892

Skype ameyasales1 ameyasales2

- ## Customer Service :

Email service@ameya360.com

- ## Partnership :

Tel +86 (21) 64016692-8333

Email mkt@ameya360.com