MC100LVEL39

3.3V ECL ÷2/4, ÷4/6 Clock Generation Chip

ON Semiconductor®

http://onsemi.com

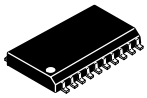

SO−20 WB
DW SUFFIX
CASE 751D

MARKING DIAGRAM*

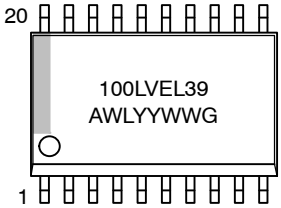

A	= Assembly Location
WL	= Wafer Lot
YY	= Year
WW	= Work Week
G	= Pb−Free Package

*For additional marking information, refer to Application Note AND8002/D.

ORDERING INFORMATION

See detailed ordering and shipping information in the package dimensions section on page 5 of this data sheet.

Description

The MC100LVEL39 is a low skew ÷2/4, ÷4/6 clock generation chip designed explicitly for low skew clock generation applications. The internal dividers are synchronous to each other, therefore, the common output edges are all precisely aligned. The device can be driven by either a differential or single-ended input signal. In addition, by using the V_{BB} output, a sinusoidal source can be AC coupled into the device.

The common enable ($\overline{EN}$) is synchronous so that the internal dividers will only be enabled/disabled when the internal clock is already in the LOW state. This avoids any chance of generating a runt clock pulse on the internal clock when the device is enabled/disabled as can happen with an asynchronous control. An internal runt pulse could lead to losing synchronization between the internal divider stages. The internal enable flip−flop is clocked on the falling edge of the input clock, therefore, all associated specification limits are referenced to the negative edge of the clock input.

Upon startup, the internal flip-flops will attain a random state; therefore, for systems which utilize multiple LVEL39s, the Master Reset (MR) input must be asserted to ensure synchronization. For systems which only use one LVEL39, the MR pin need not be exercised as the internal divider design ensures synchronization between the ÷2/4 and the ÷4/6 outputs of a single device.

The V_{BB} pin, an internally generated voltage supply, is available to this device only. For single-ended input conditions, the unused differential input is connected to V_{BB} as a switching reference voltage. V_{BB} may also rebias AC coupled inputs. When used, decouple V_{BB} and V_{CC} via a 0.01 μF capacitor and limit current sourcing or sinking to 0.5 mA. When not used, V_{BB} should be left open.

Features

- 50 ps Maximum Output-to-Output Skew
- Synchronous Enable/Disable
- Master Reset for Synchronization
- ESD Protection: Human Body Model; >2 kV
- The 100 Series Contains Temperature Compensation
- PECL Mode Operating Range:
  V_{CC} = 3.0 V to 3.8 V with V_{EE} = 0 V
- NECL Mode Operating Range:
  V_{CC} = 0 V with V_{EE} = −3.0 V to −3.8 V
- Internal Input Pulldown Resistors
- Meets or Exceeds JEDEC Spec EIA/JESD78 IC Latchup Test
- Moisture Sensitivity Pb = Level 1
  Pb−Free = Level 3
  For Additional Information, see Application Note AND8003/D
- Flammability Rating: UL 94 V−0 @ 0.125 in, Oxygen Index: 28 to 34
- Transistor Count = 419 devices
- Pb−Free Packages are Available*

*For additional information on our Pb−Free strategy and soldering details, please download the ON Semiconductor Soldering and Mounting Techniques Reference Manual, SOLDERRM/D.

© Semiconductor Components Industries, LLC, 2008

November, 2008 − Rev. 10

Publication Order Number:
MC100LVEL39/D

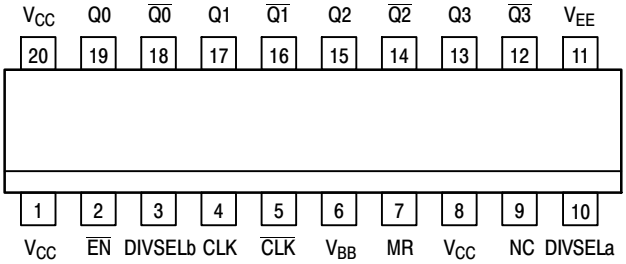

Warning: All V_{CC} and V_{EE} pins must be externally connected to Power Supply to guarantee proper operation.

Figure 1. Pinout: SOIC−20 (Top View)

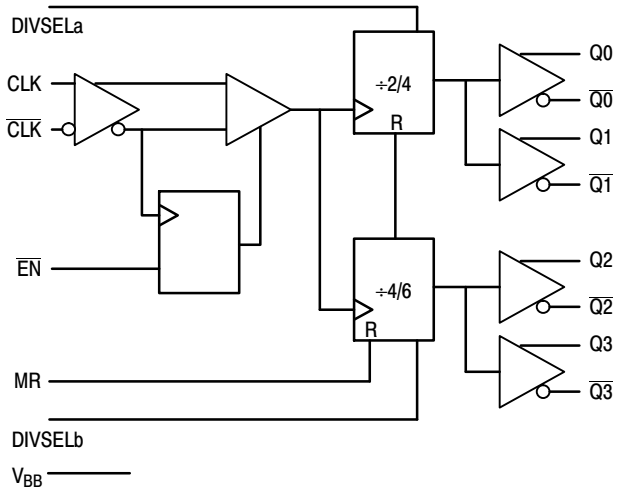

Figure 2. Logic Diagram

Table 1. PIN DESCRIPTION

Column Head	
CLK, $\overline{CLK}$	ECL Diff Clock Inputs
Q_0, Q_1; $\overline{Q_0}$, $\overline{Q_1}$	ECL Diff ÷2/4 Outputs
Q_2, Q_3; $\overline{Q_2}$, $\overline{Q_3}$	ECL Diff ÷4/6 Outputs
DIVSELa, DIVSELb	ECL Frequency Select Inputs
$\overline{EN}$	ECL Sync Enable
MR	ECL Master Reset
V_{BB}	Reference Voltage Output
V_{CC}	Positive Supply
V_{EE}	Negative Supply
NC	No Connect

Table 2. FUNCTION TABLE

CLK	$\overline{EN}$	MR	Function
Z	L	L	Divide
ZZ	H	L	Hold Q0−3
X	X	H	Reset Qo−3

Z = Low-to-High Transition
ZZ = High-to-Low Transition
X = Don't Care

DIVSELa	Q_0, Q_1 Outputs
L	Divide by 2
H	Divide by 4
DIVSELb	**Q_2, Q_3 Outputs**
L	Divide by 4
H	Divide by 6

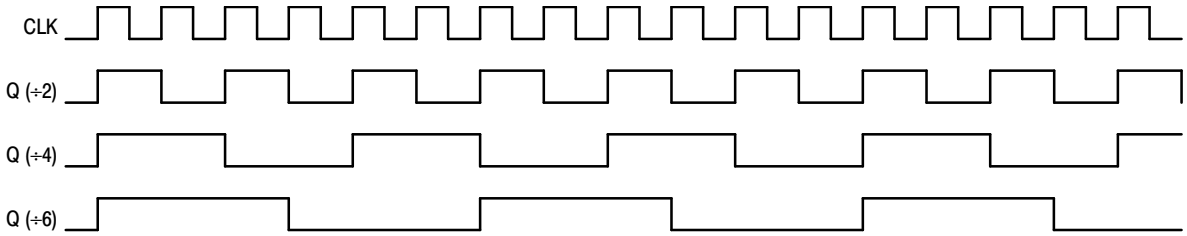

Figure 3. Timing Diagrams

Table 3. MAXIMUM RATINGS

Symbol	Parameter	Condition 1	Condition 2	Rating	Unit
V_{CC}	PECL Mode Power Supply	V_{EE} = 0 V		8 to 0	V
V_{EE}	NECL Mode Power Supply	V_{CC} = 0 V		−8 to 0	V
V_I	PECL Mode Input Voltage NECL Mode Input Voltage	V_{EE} = 0 V V_{CC} = 0 V	$V_I \le V_{CC}$ $V_I \ge V_{EE}$	6 to 0 −6 to 0	V V
I_{out}	Output Current	Continuous Surge		50 100	mA mA
I_{BB}	V_{BB} Sink/Source			± 0.5	mA
T_A	Operating Temperature Range			−40 to +85	°C
T_{stg}	Storage Temperature Range			−65 to +150	°C
θ_{JA}	Thermal Resistance (Junction−to−Ambient)	0 lfpm 500 lfpm	SOIC−20 SOIC−20	90 60	°C/W °C/W
θ_{JC}	Thermal Resistance (Junction−to−Case)	Standard Board	SOIC−20	30 to 35	°C/W
T_{sol}	Wave Solder Pb Pb−Free	<2 to 3 sec @ 248°C <2 to 3 sec @ 260°C		265 265	°C

Stresses exceeding Maximum Ratings may damage the device. Maximum Ratings are stress ratings only. Functional operation above the Recommended Operating Conditions is not implied. Extended exposure to stresses above the Recommended Operating Conditions may affect device reliability.

Table 4. LVPECL DC CHARACTERISTICS V_{CC} = 3.3 V; V_{EE} = 0.0 V (Note 1)

Symbol	Characteristic	−40°C			25°C			85°C			Unit
		Min	Typ	Max	Min	Typ	Max	Min	Typ	Max	
I_{EE}	Power Supply Current		50	59		50	59		54	61	mA
V_{OH}	Output HIGH Voltage (Note 2)	2215	2295	2420	2275	2345	2420	2275	2345	2420	mV
V_{OL}	Output LOW Voltage (Note 2)	1470	1605	1745	1490	1595	1680	1490	1595	1680	mV
V_{IH}	Input HIGH Voltage (Single−Ended)	2135		2420	2135		2420	2135		2420	mV
V_{IL}	Input LOW Voltage (Single−Ended)	1490		1825	1490		1825	1490		1825	mV
V_{BB}	Output Voltage Reference	1.92		2.04	1.92		2.04	1.92		2.04	V
V_{IHCMR}	Input HIGH Voltage Common Mode Range (Differential) (Note 6) V_{PP} < 500 mV $V_{PP} \geqq$ 500 mV	 1.3 1.5		 2.9 2.9	 1.2 1.4		 2.9 2.9	 1.2 1.4		 2.9 2.9	 V V
I_{IH}	Input HIGH Current			150			150			150	μA
I_{IL}	Input LOW Current	0.5			0.5			0.5			μA

NOTE: Device will meet the specifications after thermal equilibrium has been established when mounted in a test socket or printed circuit board with maintained transverse airflow greater than 500 lfpm. Electrical parameters are guaranteed only over the declared operating temperature range. Functional operation of the device exceeding these conditions is not implied. Device specification limit values are applied individually under normal operating conditions and not valid simultaneously.

1. Input and output parameters vary 1:1 with V_{CC}. V_{EE} can vary ±0.3 V.
2. Outputs are terminated through a 50 Ω resistor to V_{CC} − 2.0 V.
3. V_{IHCMR} min varies 1:1 with V_{EE}, max varies 1:1 with V_{CC}. The V_{IHCMR} range is referenced to the most positive side of the differential input signal. Normal operation is obtained if the HIGH level falls within the specified range and the peak-to-peak voltage lies between V_{PP}min and 1.0 V.

Table 5. LVNECL DC CHARACTERISTICS V_{CC} = 0.0 V; V_{EE} = −3.3 V (Note 4)

Symbol	Characteristic	−40°C			25°C			85°C			Unit
		Min	Typ	Max	Min	Typ	Max	Min	Typ	Max	
I_{EE}	Power Supply Current		50	59		50	59		54	61	mA
V_{OH}	Output HIGH Voltage (Note 5)	−1085	−1005	−880	−1025	−955	−880	−1025	−955	−880	mV
V_{OL}	Output LOW Voltage (Note 5)	−1830	−1695	−1555	−1810	−1705	−1620	−1810	−1705	−1620	mV
V_{IH}	Input HIGH Voltage (Single−Ended)	−1165		−880	−1165		−880	−1165		−880	mV
V_{IL}	Input LOW Voltage (Single−Ended)	−1810		−1475	−1810		−1475	−1810		−1475	mV
V_{BB}	Output Voltage Reference	−1.38		−1.26	−1.38		−1.26	−1.38		−1.26	V
V_{IHCMR}	Input HIGH Voltage Common Mode Range (Differential) (Note 6) V_{PP} < 500 mV V_{PP} ≧ 500 mV	 −2.0 −1.8		 −0.4 −0.4	 −2.1 −1.9		 −0.4 −0.4	 −2.1 −1.9		 −0.4 −0.4	 V V
I_{IH}	Input HIGH Current			150			150			150	μA
I_{IL}	Input LOW Current	0.5			0.5			0.5			μA

NOTE: Device will meet the specifications after thermal equilibrium has been established when mounted in a test socket or printed circuit board with maintained transverse airflow greater than 500 lfpm. Electrical parameters are guaranteed only over the declared operating temperature range. Functional operation of the device exceeding these conditions is not implied. Device specification limit values are applied individually under normal operating conditions and not valid simultaneously.

4. Input and output parameters vary 1:1 with V_{CC}. V_{EE} can vary ±0.3 V.
5. Outputs are terminated through a 50 Ω resistor to V_{CC} − 2.0 V.
6. V_{IHCMR} min varies 1:1 with V_{EE}, max varies 1:1 with V_{CC}. The V_{IHCMR} range is referenced to the most positive side of the differential input signal. Normal operation is obtained if the HIGH level falls within the specified range and the peak-to-peak voltage lies between V_{PP}min and 1.0 V.

Table 6. AC CHARACTERISTICS V_{CC} = 3.3 V; V_{EE} = 0.0 V or V_{CC} = 0.0 V; V_{EE} = −3.3 V (Note 7)

Symbol	Characteristic	−40°C			25°C			85°C			Unit
		Min	Typ	Max	Min	Typ	Max	Min	Typ	Max	
fmax	Maximum Toggle Frequency	1000			1000			1000			MHz
t_{PLH} t_{PHL}	Propagation Delayed Output CLK to Q (Diff) CLK to Q (S.E.) MR to Q	 850 850 600		 1150 1150 900	 900 900 610		 1200 1200 910	 950 950 630		 1250 1250 930	ps
t_{SKEW}	Within-Device Skew (Note 8) $Q_0 - Q_3$ Part-to-Part $Q_0 - Q_3$ (Diff)			50 200			50 200			50 200	ps
tJITTER	Random CLOCK Jitter (RMS) @ 1000 MHz		2.0	3.0		2.0	3.0		2.0	3.0	ps
t_S	Setup Time $\overline{EN}$ to $\overline{CLK}$ DIVSEL to CLK	250 400			250 400			250 400			ps
t_H	Hold Time $\overline{CLK}$ to $\overline{EN}$ CLK to Div_Sel	100 150			100 150			100 150			ps
V_{PP}	Input Swing (Note 9) CLK	250		1000	250		1000	250		1000	mV
t_{RR}	Reset Recovery Time			100			100			100	ps
t_{PW}	Minimum Pulse Width CLK MR	500 700			500 700			500 700			ps
t_r, t_f	Output Rise/Fall Times Q (20% − 80%)	280		550	280		550	280		550	ps

NOTE: Device will meet the specifications after thermal equilibrium has been established when mounted in a test socket or printed circuit board with maintained transverse airflow greater than 500 lfpm. Electrical parameters are guaranteed only over the declared operating temperature range. Functional operation of the device exceeding these conditions is not implied. Device specification limit values are applied individually under normal operating conditions and not valid simultaneously.

7. V_{EE} can vary ±0.3 V. Outputs are terminated through a 50 Ω resistor to V_{CC} − 2.0 V.
8. Skew is measured between outputs under identical transitions.
9. V_{PP}(min) is minimum input swing for which AC parameters are guaranteed. The device will function reliably with differential inputs down to 100 mV.

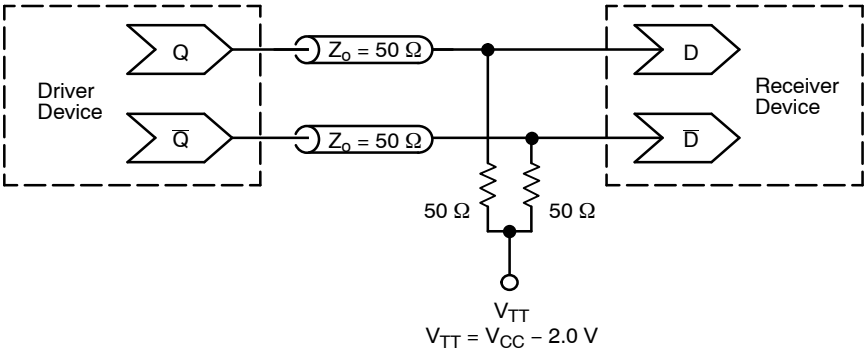

Figure 4. Typical Termination for Output Driver and Device Evaluation (See Application Note AND8020/D − Termination of ECL Logic Devices.)

ORDERING INFORMATION

Device	Package	Shipping†
MC100LVEL39DW	SOIC−20	38 Units / Rail
MC100LVEL39DWG	SOIC−20 (Pb−Free)	38 Units / Rail
MC100LVEL39DWR2	SOIC−20	1000 / Tape & Reel
MC100LVEL39DWR2G	SOIC−20 (Pb−Free)	1000 / Tape & Reel

†For information on tape and reel specifications, including part orientation and tape sizes, please refer to our Tape and Reel Packaging Specifications Brochure, BRD8011/D.

Resource Reference of Application Notes

AN1405/D – ECL Clock Distribution Techniques

AN1406/D – Designing with PECL (ECL at +5.0 V)

AN1503/D – ECLinPS I/O SPiCE Modeling Kit

AN1504/D – Metastability and the ECLinPS Family

AN1568/D – Interfacing Between LVDS and ECL

AN1672/D – The ECL Translator Guide

AND8001/D – Odd Number Counters Design

AND8002/D – Marking and Date Codes

AND8020/D – Termination of ECL Logic Devices

AND8066/D – Interfacing with ECLinPS

AND8090/D – AC Characteristics of ECL Devices

PACKAGE DIMENSIONS

SO−20 WB
DW SUFFIX
CASE 751D−05
ISSUE G

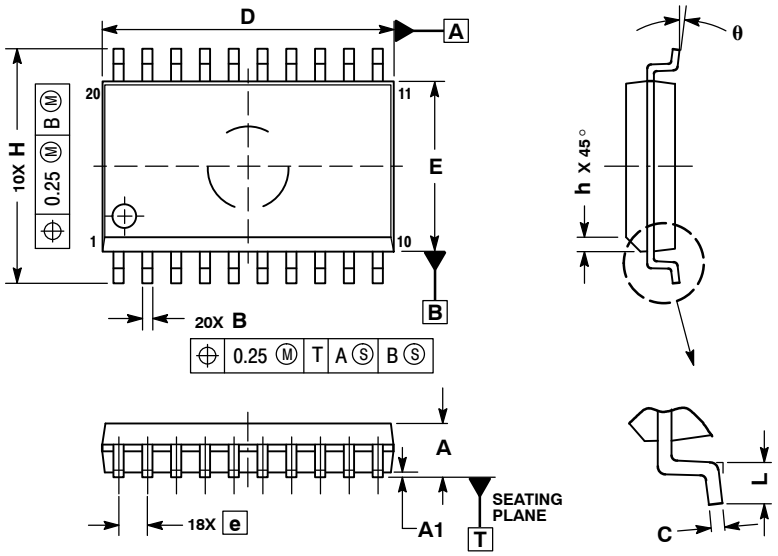

NOTES:
1. DIMENSIONS ARE IN MILLIMETERS.
2. INTERPRET DIMENSIONS AND TOLERANCES PER ASME Y14.5M, 1994.
3. DIMENSIONS D AND E DO NOT INCLUDE MOLD PROTRUSION.
4. MAXIMUM MOLD PROTRUSION 0.15 PER SIDE.
5. DIMENSION B DOES NOT INCLUDE DAMBAR PROTRUSION. ALLOWABLE PROTRUSION SHALL BE 0.13 TOTAL IN EXCESS OF B DIMENSION AT MAXIMUM MATERIAL CONDITION.

	MILLIMETERS	
DIM	MIN	MAX
A	2.35	2.65
A1	0.10	0.25
B	0.35	0.49
C	0.23	0.32
D	12.65	12.95
E	7.40	7.60
e	1.27 BSC	
H	10.05	10.55
h	0.25	0.75
L	0.50	0.90
θ	0°	7°

ECLinPS are registered trademarks of Semiconductor Components Industries, LLC (SCILLC).

ON Semiconductor and are registered trademarks of Semiconductor Components Industries, LLC (SCILLC). SCILLC reserves the right to make changes without further notice to any products herein. SCILLC makes no warranty, representation or guarantee regarding the suitability of its products for any particular purpose, nor does SCILLC assume any liability arising out of the application or use of any product or circuit, and specifically disclaims any and all liability, including without limitation special, consequential or incidental damages. “Typical” parameters which may be provided in SCILLC data sheets and/or specifications can and do vary in different applications and actual performance may vary over time. All operating parameters, including “Typicals” must be validated for each customer application by customer’s technical experts. SCILLC does not convey any license under its patent rights nor the rights of others. SCILLC products are not designed, intended, or authorized for use as components in systems intended for surgical implant into the body, or other applications intended to support or sustain life, or for any other application in which the failure of the SCILLC product could create a situation where personal injury or death may occur. Should Buyer purchase or use SCILLC products for any such unintended or unauthorized application, Buyer shall indemnify and hold SCILLC and its officers, employees, subsidiaries, affiliates, and distributors harmless against all claims, costs, damages, and expenses, and reasonable attorney fees arising out of, directly or indirectly, any claim of personal injury or death associated with such unintended or unauthorized use, even if such claim alleges that SCILLC was negligent regarding the design or manufacture of the part. SCILLC is an Equal Opportunity/Affirmative Action Employer. This literature is subject to all applicable copyright laws and is not for resale in any manner.

PUBLICATION ORDERING INFORMATION

LITERATURE FULFILLMENT:
Literature Distribution Center for ON Semiconductor
P.O. Box 5163, Denver, Colorado 80217 USA
Phone: 303−675−2175 or 800−344−3860 Toll Free USA/Canada
Fax: 303−675−2176 or 800−344−3867 Toll Free USA/Canada
Email: orderlit@onsemi.com

N. American Technical Support: 800−282−9855 Toll Free USA/Canada
Europe, Middle East and Africa Technical Support:
Phone: 421 33 790 2910
Japan Customer Focus Center
Phone: 81−3−5773−3850

ON Semiconductor Website: **www.onsemi.com**

Order Literature: http://www.onsemi.com/orderlit

For additional information, please contact your local Sales Representative

AMEYA360
Components Supply Platform

Authorized Distribution Brand :

Website :

Welcome to visit www.ameya360.com

Contact Us :

- ## Address :

401 Building No.5, JiuGe Business Center, Lane 2301, Yishan Rd
Minhang District, Shanghai , China

- ## Sales :

Direct +86 (21) 6401-6692

Email amall@ameya360.com

QQ 800077892

Skype ameyasales1 ameyasales2

- ## Customer Service :

Email service@ameya360.com

- ## Partnership :

Tel +86 (21) 64016692-8333

Email mkt@ameya360.com