Emergency Stop Switch (16-dia.)

A165E

CSM_A165E_DS_E_4_1

Separate Construction with Smallest Class of Depth in the World

- Direct opening mechanism to open contacts in emergencies, such as when they are welded.
- Conforms to EN418.
- Includes a safety lock to prevent misuse.
- Features separate construction that allows the Switch to be separated for easier wiring and one-piece-like construction that allows easier handling.
- Models available with 3 contacts built into a single block (A165E-U).

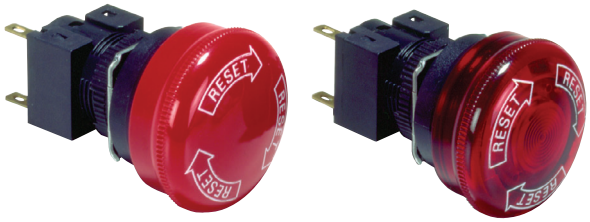

⚠ Be sure to read the precautions for all pushbutton switches in the *Pushbutton Switches Group Catalog* (Cat. No. X032), as well as the *"Safety Precautions"* on page 9.

Model Number Structure

List of Models

Diameter of Operation Unit	Function	Model	Shape	
30-mm models 40-mm models	Push-Lock, turn-reset	**A165E**	Separate construction	(30-mm model)
		A165E-□-03U	One-piece construction	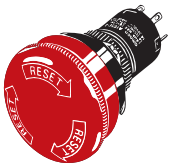 (30-mm model)

Model Number Legend (Completely Assembled)

Shipped as a set that includes the Operation Unit and light source.

A165E-LS-24D-02

(1 = LS, 2 = 24D, 3 = 02)

IP65 (Oil-resistant)

1. Operation Unit Shape and Functions

Code	Functions		Pushbutton
S	Non-lighted	Push-lock, turn-reset	30 dia.
LS	Lighted		
M	Non-lighted		40 dia.
LM	Lighted		

2. Light Source

Code	Type	Operation voltage	Rated voltage
None	Non-lighted	---	---
24D	LED	24 VAC/ VDC±5%	24 VAC/ VDC

Note: Models with separate construction (SPST-NC and DPST-NC) are for normal loads only. One-piece models (TPST-NC) are for either normal loads or microloads.

3. Contacts

Code	Description
01	SPST-NC
02	DPST-NC
03U	TPST-NC ✻

✻ TPST-NC models have one-piece construction with the contact unit. Only non-lighted models are available.

Ordering Information

List of Sets

Illumination	Rated voltage	Pushbutton color	Pushbutton size	Terminal	Contact form	Model
LED	24 VAC/VDC	Red	30 dia.	Solder terminal	SPST-NC	**A165E-LS-24D-01**
					DPST-NC	**A165E-LS-24D-02**
Non-lighted	---				SPST-NC	**A165E-S-01**
					DPST-NC	**A165E-S-02**
LED	24 VAC/VDC		40 dia.		SPST-NC	**A165E-LM-24D-01**
					DPST-NC	**A165E-LM-24D-02**
Non-lighted	---				SPST-NC	**A165E-M-01**
					DPST-NC	**A165E-M-02**
Non-lighted	---		30 dia.		TPST-NC	**A165E-S-03U**
			40 dia.			**A165E-M-03U**

List of Sets (in Different Colors)

Illumination	Pushbutton color ✻	Pushbutton size	Terminal	Contact form	Model
Non-lighted	Yellow	30 dia.	Solder terminal	SPST-NC	**A165E-SY-01**
	Gray				**A165E-SGR-01**
	Yellow			DPST-NC	**A165E-SY-02**
	Gray				**A165E-SGR-02**
	Yellow	40 dia.		SPST-NC	**A165E-MY-01**
	Gray				**A165E-MGR-01**
	Yellow			DPST-NC	**A165E-MY-02**
	Gray				**A165E-MGR-02**
	Yellow	30 dia.		TPST-NC	**A165E-SY-03U**
	Gray				**A165E-SGR-03U**
	Yellow	40 dia.			**A165E-MY-03U**
	Gray				**A165E-MGR-03U**

✻ Models with yellow or gray pushbutton colors cannot be used as emergency switches.

Individual Parts (for Switches with Separate Construction)

Operation Units

Appearance	Illumination	Model
30 dia.	Non-lighted	**A165E-S**
	Lighted	**A165E-LS**
40 dia.	Non-lighted	**A165E-M**
	Lighted	**A165E-LM**

Lamps

Appearance	LED color		Rated voltage	Model
	Red	Bright	5 VDC	**A16-5DSR**
			12 VAC/VDC	**A16-12DSR**
			24 VAC/VDC	**A16-24DSR**

Switches

Appearance	Illumination	Contact form	Model
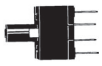	Non-lighted	SPST-NC	**A165E-01**
		DPST-NC	**A165E-02**
	Lighted	SPST-NC	**A165E-01L**
		DPST-NC	**A165E-02L**

Switch Units

Appearance	Illumination	Contact form	Model
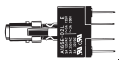	Lighted	SPST-NC	**A165E-R-24D-01**
		DPST-NC	**A165E-R-24D-02**

Accessories (Order Separately)

Item	Appearance	Type	Model	Precautions
Yellow Plate		Yellow, 45 dia.	**A16Z-5070**	Use this as an emergency stop nameplate.
Panel Plug		Round	**A16ZT-3003**	Used for covering the panel cutouts for future panel expansion. Degree of protection: IP40 Color: Black
Tightening Tool		---	**A16Z-3004**	Useful for repetitive mounting. Be careful not to tighten excessively.
Extractor			**A16Z-5080**	Convenient for extracting the Switch and Lamp.

Specifications

Certified Standard Ratings

UL508, CSA C22.2 No.14, CCC(GB14048.5)

Models with Separate Construction

Rated voltage	Resistive load
125 VAC 250 VAC 30 VDC	5 A 3 A 3 A

Models with One-piece Construction

Rated voltage	Resistive load
125 VAC 250 VAC 30 VDC	1 A 0.5 A 1 A

TÜV(EN60947-5-1)

Models with Separate Construction

Rated voltage	Resistive load
250 VAC 30 VDC	3 A 3 A

Models with One-piece Construction

Rated voltage	Resistive load
250 VAC 30 VDC	0.5 A 1 A

Certified Standards

Certification body	Standards	File No.
UL ✻	UL508, CSA C22.2 No.14	E41515
TÜV SÜD	EN60947-5-1, EN60947-5-5	Inquire
CQC (CCC)	GB14048.5	2003010303070678

✻ Certification for CSA C22.2 No. 14 is indicated by the c UL us mark. Separate construction models have been certified for the Switch Unit.

Switch Ratings

Models with Separate Construction

Rated voltage	Resistive load
125 VAC 250 VAC 30 VDC	5 A 3 A 3 A

Note: Minimum applicable load: 5 VDC, 150 mA

Models with One-piece Construction

Rated voltage	Resistive load
125 VAC 250 VAC 30 VDC	1 A 0.5 A 1 A

Note: Minimum applicable load: 5 VDC, 1 mA

LED Ratings

(Only for Models with LEDs)

Rated voltage	Rated current	Operation voltage
24 VAC/VDC	8 mA	24 VAC/VDC±5%

Characteristics

Item	Type	Emergency Stop Switch		
		Non-lighted A165E-S/A165E-M	Lighted A165E-LS/A165-LM	Non-lighted, One-piece construction A165E-U
Allowable operating frequency	Mechanical	20 operations/minute max.		
	Electrical	10 operations/minute max.		
Insulation resistance		100 MΩ min. (at 500 VDC)		
Dielectric strength	Between terminals of same polarity	1,000 VAC, 50/60 Hz for 1 min		
	Between terminals of different polarity	2,000 VAC 50/60 Hz for 1 min		
	Between each terminal and ground	2,000 VAC 50/60 Hz for 1 min		
	Between lamp terminals	1,000 VAC, 50/60 Hz for 1 min ✻1		---
Vibration resistance	Malfunction	10 to 55 Hz, 1.5-mm double amplitude (malfunction within 1 ms)		
Shock resistance	Destruction	500 m/s²		
	Malfunction	300 m/s² max. (malfunction within 1 ms)		150 m/s² max. (malfunction within 1 ms)
Durability	Mechanical	100,000 operations min.		
	Electrical	100,000 operations min.		
Degree of protection		IP65 Oil-resistant ✻2	IP65 ✻2	IP65 Oil-resistant ✻2
Electric shock protection class		Class II		
PTI (tracking characteristic)		175		
Degree of contamination		3 (EN60947-5-1)		
Weight		Approx. 16 g (in case of DPST-NC Switches)		
Ambient operating temperature		−10 to 55°C (with no icing or condensation)		
Ambient operating humidity		35% to 85%		
Ambient storage temperature		−25 to 65°C (with no icing or condensation)		

✻1. LED not mounted. (Test them with the LED removed.)
✻2. Degree of protection from the front of the panel.

Operating Characteristics

Item	Type	Characteristics of models with separate construction	Characteristics of models with one-piece construction
Operating force	OF max.	14.7 N	14.7 N
Releasing force	RF min.	0.1 N·m	0.1 N·m
Pretravel	PT	3.5±0.5 mm	3±0.5 mm

Structure and Nomenclature

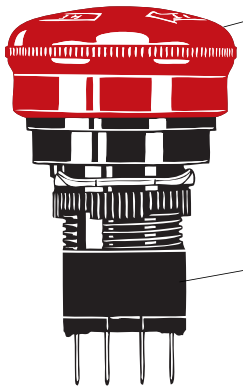

(The above figure is example of the separate construction model.)

Operation Unit

Color

Operation Unit Color

- Models with LED illumination: Red
- Non-lighted models ✻ : Red, yellow, or gray

Degree of Protection

IP65 oil resistance

Switch

Specifications

For standard load
125 VAC, 5 A
250 VAC, 3 A
30 VDC, 3 A

Operation Unit

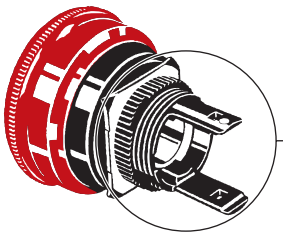

Switch Holder

✻ Models with yellow or gray pushbutton colors cannot be used as emergency switches.

Dimensions

(Unit: mm)

A165E-S

Non-lighted models
30 mm diameter

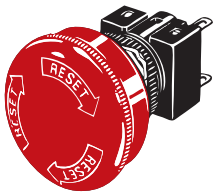

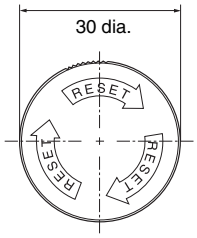

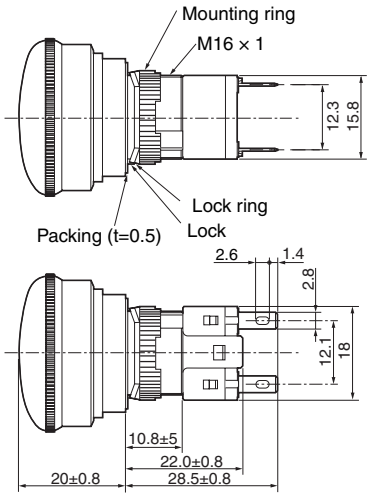

Panel cutout dimensions

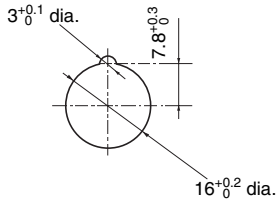

- When applying a coating such as paint to the panel, dimensions after the coating must satisfy the specified dimensions.
- Recommended panel thickness: 0.5 to 3.2 mm.

A165E-LS

Lighted models
30 mm diameter

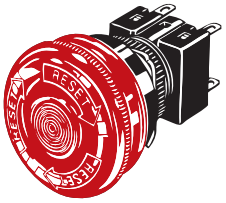

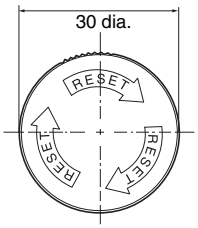

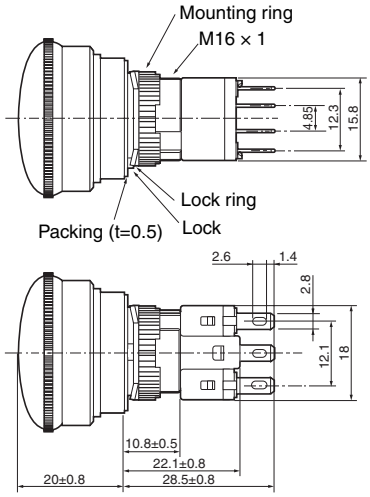

Panel cutout dimensions

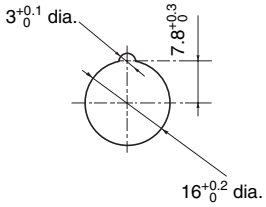

- When applying a coating such as paint to the panel, dimensions after the coating must satisfy the specified dimensions.
- Recommended panel thickness: 0.5 to 3.2 mm.

A165E-S-03U

Non-lighted,
One-piece construction models
30 mm diameter

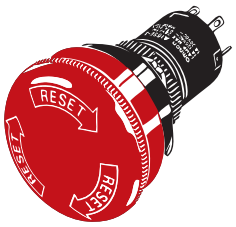

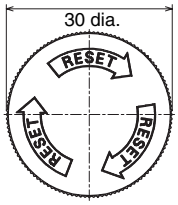

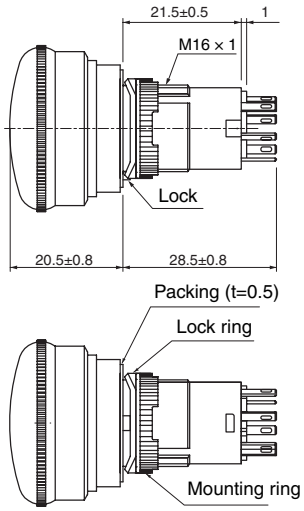

Panel cutout dimensions

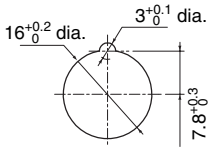

- When applying a coating such as paint to the panel, dimensions after the coating must satisfy the specified dimensions.
- Recommended panel thickness: 0.5 to 3.2 mm.

A165E-M

Non-lighted models
40 mm diameter

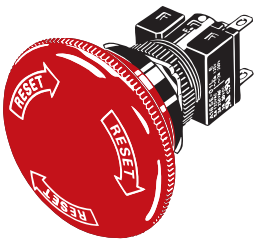

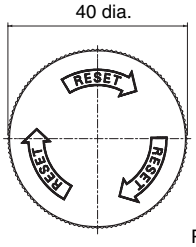

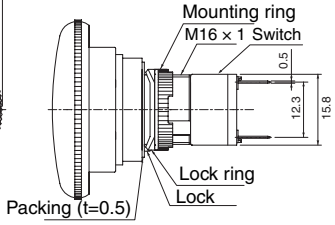

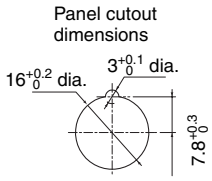

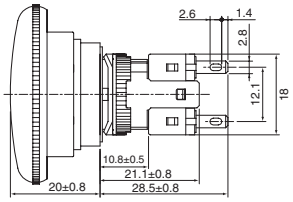

- When applying a coating such as paint to the panel, dimensions after the coating must satisfy the specified dimensions.
- Recommended panel thickness: 0.5 to 3.2 mm.

A165E-LM

Lighted models
40 mm diameter

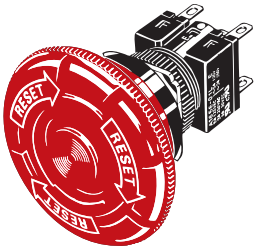

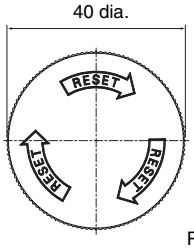

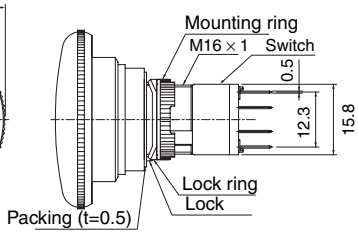

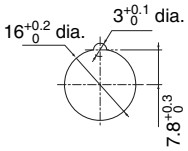

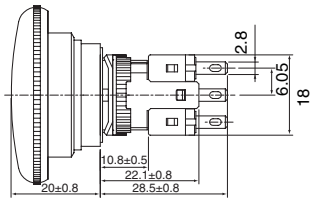

- When applying a coating such as paint to the panel, dimensions after the coating must satisfy the specified dimensions.
- Recommended panel thickness: 0.5 to 3.2 mm.

A165E-M-03U

One-piece construction models
40 mm diameter

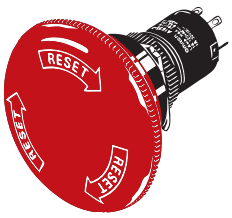

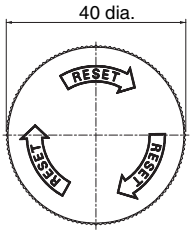

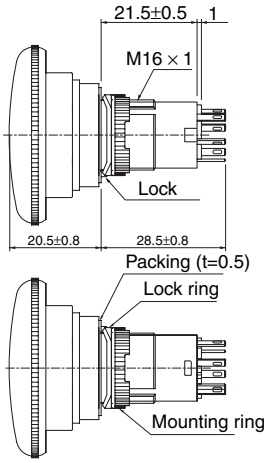

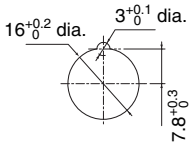

- When applying a coating such as paint to the panel, dimensions after the coating must satisfy the specified dimensions.
- Recommended panel thickness: 0.5 to 3.2 mm.

Accessories

Yellow Plate (Vinyl Chloride)

A16Z-5070

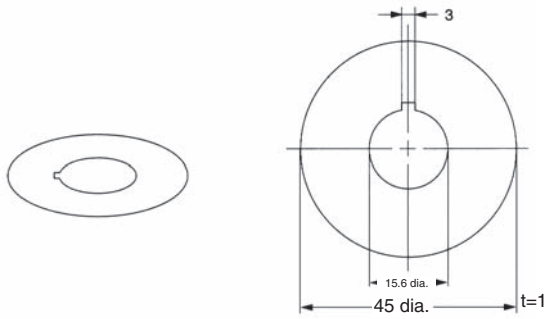

Panel Plugs (Round Type)

A16ZT-3003

- Select an appropriate Panel Plug according to the panel design and mount from the front side of the panel. Panel cutout dimensions are the same as those for the Operation Unit.

Lock Ring

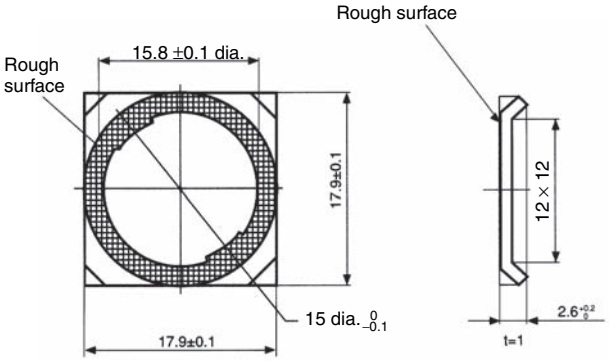

Tightening Tool

A16Z-3004

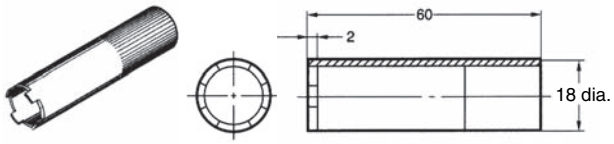

Terminal Arrangement

SPST Switches	DPST Switches	TPST Switches
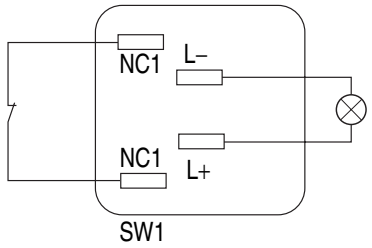	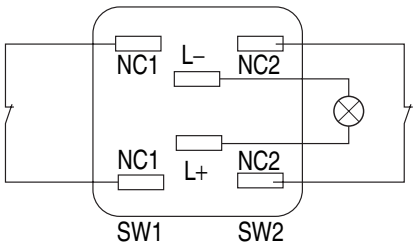	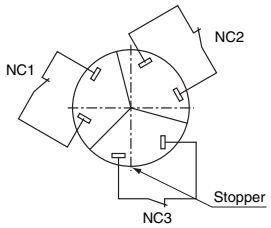

Note: The L+ and L− terminals are not available with the non-lighted models.

Installation

Mounting to the Panel (Models with Separate Construction)

After installing the Operation Unit, snap in the Switch from the back of the panel.

(1) Installing the Operation Unit

- Attach rubber packing or the Yellow Plate onto the Operation Unit from its terminal side. Insert the Operation Unit into the panel from the front. Install the lock ring and mounting nut from the terminal side and tighten.
- Adjust the slits on the hole of rubber packing and Yellow Plate to the protruding part of the Unit.
- Rubber packing is not necessary when the Yellow Plate is used.
- Tighten the nut to the torque of 0.29 to 0.49 N·m.
- The Operation Unit should be installed with its protruding part adjusted to the slit of the panel hole.
- Align the lock ring to the groove of the Operation Unit so that the edge is drawn to the panel side.

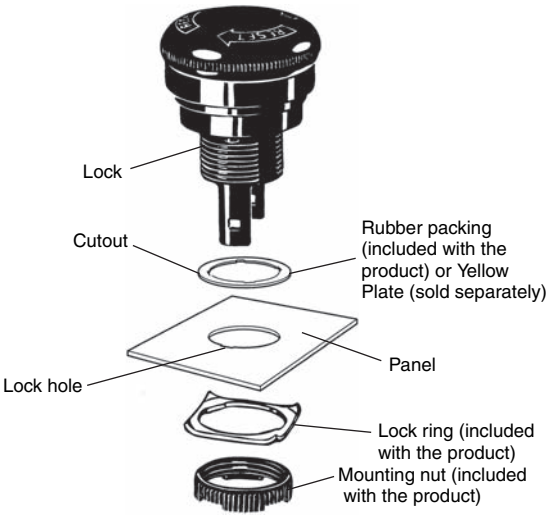

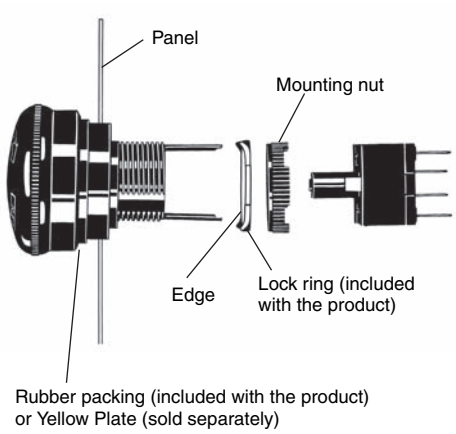

(2) Mounting the Switch

- Snap on the Switch to the Operation Unit.
- Make sure that the Switch has the correct orientation when snapping it onto the Operation Unit.
- Align the white dot on the Operation Unit with the guide groove on the side of the Switch marked with an “L” as shown below, and push the Switch into the Operation Unit until it clicks into place. Confirm that the Switch is securely in place before using.

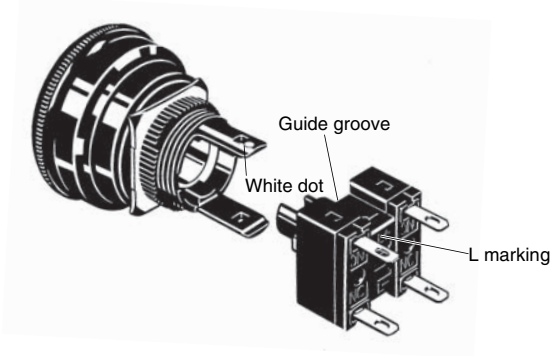

(3) Removing the Switch

- Insert the prongs of the A16Z-5080 Extractor between the Switch and the Operation Unit, grip the Switch, and pull to remove.

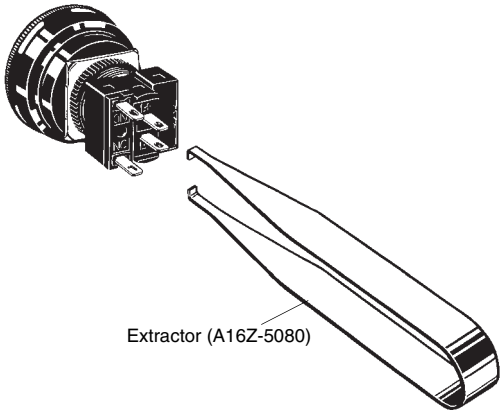

(4) Installing the LED Lamp

- When mounting the Lamp, make sure it is facing the direction shown in the following diagram. Insert the Lamp while matching the protruding part of the Lamp and the small guides on the outer surface of the switch.

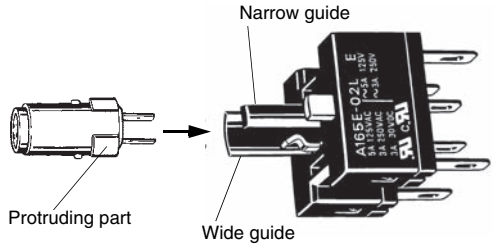

Safety Precautions

Be sure to read the precautions for all pushbutton switches in the *Pushbutton Switches Group Catalog* (Cat. No. X032).

⚠ CAUTION

If the Operation Unit is separated from the Switch Unit, the equipment will not stop, creating a hazardous condition. Always confirm that safety functions are operating before starting operation.

Precautions for Correct Use

Mounting

- Always make sure that the power is turned OFF before mounting, removing, or wiring the Switch, or performing maintenance. Electrical shock or fire may result if the power is not turned OFF.
- The tightening torque is 0.29 to 0.49 N·m.

Wiring

- Be sure to use electrical wires that are a size appropriate for the applied voltage and carry current. Perform soldering according to the conditions given below. If the soldering is not properly performed, abnormal heating may result, possibly resulting in fire.
  1. Hand soldering: 30 W, within 5 s
  2. Dip soldering: 240°C, within 3 s
  Wait for one minute after soldering before exerting any external force on the solder.
- Use non-corrosive resin fluid as the flux.
- Make sure that the electric cord is wired so that it does not touch the Unit. If the electric cord will touch the Unit, then electric wires with a heat resistance of 100°C min. must be used.
- After wiring the Switch, maintain an appropriate clearance and creepage distance.

Operating Environment

- The IP65 model is designed with a degree of protection so that it will not sustain damage if it is subjected to water from any direction to the front of the panel.
- The Switch is intended for indoor use only. Using the Switch outdoor may cause it to fail.

Using the Microload

- Insert a contact protection circuit, if necessary, to prevent the reduction of life expectancy due to extreme wear on the contacts caused by loads where inrush current occurs when the contact is opened and closed.
- The A165E-□U (one-piece construction) allows both a standard load (125 V at 1 A, 250 V at 0.5 A) and a microload. If a standard load is applied, however, the microload area cannot be used. If the microload area is used with a standard load, the contact surface will become rough, and the opening and closing of the contact for a microload may become unreliable.
- The minimum applicable load is the N-level reference value. This value indicates the malfunction reference level for the reliability level of 60% (λ_{60}) (conforming to JIS C5003).
- The equation, $\lambda_{60} = 0.5 \times 10^{-6}$/time indicates that the estimated malfunction rate is less than 1/2,000,000 with a reliability level of 60%.

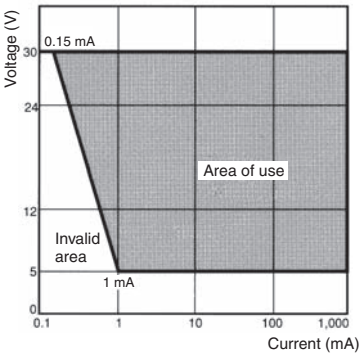

LEDs

The LED current-limiting resistor is built-in, so external resistance is not required.

Rated voltage	Internal limiting resistor
24 VAC/VDC	2.4 kΩ

Operating Torque

- Do not exceed an operating torque of 0.49 N·m in the direction of rotation.
- Do not pull the operating button or apply excessive force to any side of the button.
  Otherwise it may be damaged.

Others

- The oil-resistant IP65 uses NBR rubber and is resistant to general cutting oil and cooling oil. Some special oils cannot be used with the oil-resistant IP65, however, so contact your OMRON representative for details.
- If the panel is to be coated, make sure that the panel meets the specified dimensions after coating.
- Due to the structure of the Switch, severe shock or vibration may cause malfunctions or damage to the Switch.
  Also, most Switches are made from resin and will be damaged if they come into contact with sharp objects. Particularly scratches on the Operation Unit may create visual and operational obtrusions. Handle the Switches with care, and do not throw or drop them.

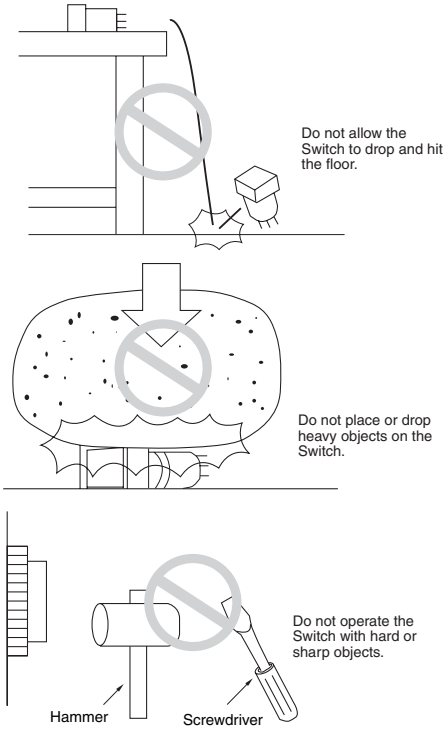

Read and Understand This Catalog

Please read and understand this catalog before purchasing the products. Please consult your OMRON representative if you have any questions or comments.

Warranty and Limitations of Liability

WARRANTY

OMRON's exclusive warranty is that the products are free from defects in materials and workmanship for a period of one year (or other period if specified) from date of sale by OMRON.

OMRON MAKES NO WARRANTY OR REPRESENTATION, EXPRESS OR IMPLIED, REGARDING NON-INFRINGEMENT, MERCHANTABILITY, OR FITNESS FOR PARTICULAR PURPOSE OF THE PRODUCTS. ANY BUYER OR USER ACKNOWLEDGES THAT THE BUYER OR USER ALONE HAS DETERMINED THAT THE PRODUCTS WILL SUITABLY MEET THE REQUIREMENTS OF THEIR INTENDED USE. OMRON DISCLAIMS ALL OTHER WARRANTIES, EXPRESS OR IMPLIED.

LIMITATIONS OF LIABILITY

OMRON SHALL NOT BE RESPONSIBLE FOR SPECIAL, INDIRECT, OR CONSEQUENTIAL DAMAGES, LOSS OF PROFITS OR COMMERCIAL LOSS IN ANY WAY CONNECTED WITH THE PRODUCTS, WHETHER SUCH CLAIM IS BASED ON CONTRACT, WARRANTY, NEGLIGENCE, OR STRICT LIABILITY.

In no event shall the responsibility of OMRON for any act exceed the individual price of the product on which liability is asserted.

IN NO EVENT SHALL OMRON BE RESPONSIBLE FOR WARRANTY, REPAIR, OR OTHER CLAIMS REGARDING THE PRODUCTS UNLESS OMRON'S ANALYSIS CONFIRMS THAT THE PRODUCTS WERE PROPERLY HANDLED, STORED, INSTALLED, AND MAINTAINED AND NOT SUBJECT TO CONTAMINATION, ABUSE, MISUSE, OR INAPPROPRIATE MODIFICATION OR REPAIR.

Application Considerations

SUITABILITY FOR USE

OMRON shall not be responsible for conformity with any standards, codes, or regulations that apply to the combination of products in the customer's application or use of the products.

At the customer's request, OMRON will provide applicable third party certification documents identifying ratings and limitations of use that apply to the products. This information by itself is not sufficient for a complete determination of the suitability of the products in combination with the end product, machine, system, or other application or use.

The following are some examples of applications for which particular attention must be given. This is not intended to be an exhaustive list of all possible uses of the products, nor is it intended to imply that the uses listed may be suitable for the products:

- Outdoor use, uses involving potential chemical contamination or electrical interference, or conditions or uses not described in this catalog.
- Nuclear energy control systems, combustion systems, railroad systems, aviation systems, medical equipment, amusement machines, vehicles, safety equipment, and installations subject to separate industry or government regulations.
- Systems, machines, and equipment that could present a risk to life or property.

Please know and observe all prohibitions of use applicable to the products.

NEVER USE THE PRODUCTS FOR AN APPLICATION INVOLVING SERIOUS RISK TO LIFE OR PROPERTY WITHOUT ENSURING THAT THE SYSTEM AS A WHOLE HAS BEEN DESIGNED TO ADDRESS THE RISKS, AND THAT THE OMRON PRODUCTS ARE PROPERLY RATED AND INSTALLED FOR THE INTENDED USE WITHIN THE OVERALL EQUIPMENT OR SYSTEM.

PROGRAMMABLE PRODUCTS

OMRON shall not be responsible for the user's programming of a programmable product, or any consequence thereof.

Disclaimers

CHANGE IN SPECIFICATIONS

Product specifications and accessories may be changed at any time based on improvements and other reasons.

It is our practice to change model numbers when published ratings or features are changed, or when significant construction changes are made. However, some specifications of the products may be changed without any notice. When in doubt, special model numbers may be assigned to fix or establish key specifications for your application on your request. Please consult with your OMRON representative at any time to confirm actual specifications of purchased products.

DIMENSIONS AND WEIGHTS

Dimensions and weights are nominal and are not to be used for manufacturing purposes, even when tolerances are shown.

PERFORMANCE DATA

Performance data given in this catalog is provided as a guide for the user in determining suitability and does not constitute a warranty. It may represent the result of OMRON's test conditions, and the users must correlate it to actual application requirements. Actual performance is subject to the OMRON Warranty and Limitations of Liability.

ERRORS AND OMISSIONS

The information in this document has been carefully checked and is believed to be accurate; however, no responsibility is assumed for clerical, typographical, or proofreading errors, or omissions.

2009.3

In the interest of product improvement, specifications are subject to change without notice.

OMRON Corporation
Industrial Automation Company

http://www.ia.omron.com/

(c)Copyright OMRON Corporation 2009 All Right Reserved.

AMEYA360
Components Supply Platform

Authorized Distribution Brand :

Website :

Welcome to visit www.ameya360.com

Contact Us :

Address :

401 Building No.5, JiuGe Business Center, Lane 2301, Yishan Rd
Minhang District, Shanghai , China

Sales :

Direct +86 (21) 6401-6692

Email amall@ameya360.com

QQ 800077892

Skype ameyasales1 ameyasales2

Customer Service :

Email service@ameya360.com

Partnership :

Tel +86 (21) 64016692-8333

Email mkt@ameya360.com