REVISIONS					
REV	ECO	DESCRIPTION	DATE	BY	APPR
A3		RELEASE NEW DWG FORMAT	06/07/13	DRP	

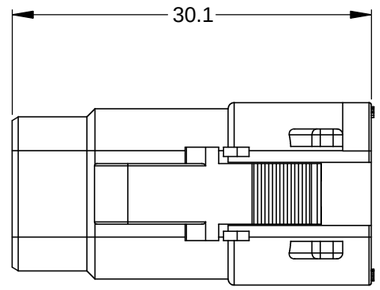

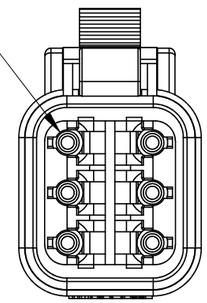

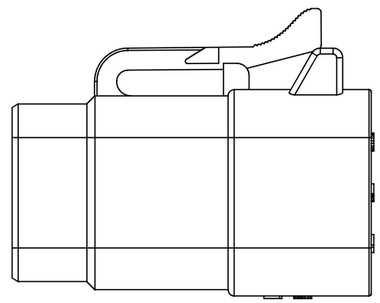

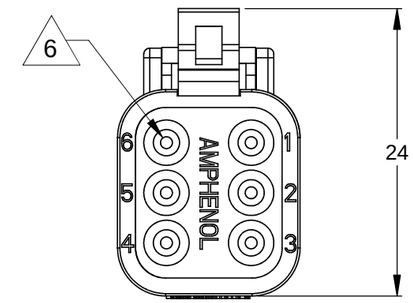

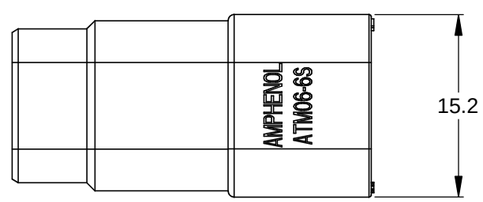

STANDARD MOLDED COLOR IS GREY.
ADDITIONAL COLORS SHOWN IN PART NUMBER
CHART ARE AVAILABLE VIA SPECIAL ORDER.

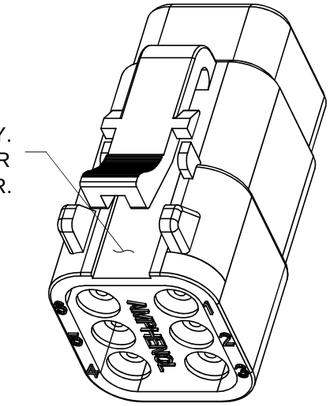

NOTES: UNLESS OTHERWISE SPECIFIED

1. MATERIAL:
   HOUSING: THERMOPLASTIC
   SEAL: SILICONE RUBBER

2. MODIFICATIONS: N/A

3. SPECIFICATIONS:
   3.1 CURRENT RATING: 7.5 AMPS
   3.2 OPERATING TEMPERATURE: -55°C TO +125°C
   3.3 DIELECTRIC WITHSTANDING VOLTAGE: LESS THAN 2 MILLIAMPS CURRENT LEAKAGE @ 1500 VOLTS AC.
   3.4 INSULATION RESISTANCE: 1000 MEGOHMS MIN @ 25°C.
   3.5 MOISTURE RESISTANCE: IP67 (MATED CONDITION)
   3.6 MATING CYCLE DURABILITY: 100 CYCLES
   3.7 RoHS COMPLIANT

4. MATING PART: ATM04-6P* RECEPTACLE.
   (* = MODIFICATIONS AND/OR COLORS)

5. ALL DIMENSIONS ARE FOR REFERENCE USE ONLY.

6 CONTACT SIZE AND REAR SEAL WIRE RANGE:

CONTACT SIZE	MIN. INSUL O.D.	MAX. INSUL O.D.	TYPICAL WIRE RANGE
20	1.35 mm (.053 in)	3.05 mm (.120 in)	16 - 22 AWG

PART NUMBER CHART	
COLOR	PART NUMBER
GREY	ATM06-6S
BLACK	ATM06-6S-BLK
BLUE	ATM06-6S-BLU
BROWN	ATM06-6S-BRN
GREEN	ATM06-6S-GRN
RED	ATM06-6S-RED
WHITE	ATM06-6S-WHT
YELLOW	ATM06-6S-YEL

QUANTITY	PART NUMBER	DESCRIPTION	ITEM
	SEE PART NUMBER CHART		

MATERIALS LIST

UNLESS OTHERWISE SPECIFIED
1) All dimensions are in metric(mm).
2) Tolerances are as follows:
1 PL DEC ±0.30 | Fractions ±1/64
2 PL DEC ±0.15 | Angles ±1°
3 PL DEC ±0.08
3) Note reference = X

MATERIAL SPECIFICATIONS:

PROCESS SPECIFICATIONS:

NEXT ASS'Y:

SIGNATURES		DATE
DRAWN:	D.PARKS	06/07/13
CHECKED:		
ENGINEER:		
APPROVAL:		
CUSTOMER:		

THIS DRAWING IS SUPPLIED FOR INFORMATION ONLY. DESIGN FEATURES, SPECIFICATIONS AND PERFORMANCE DATA SHOWN HEREON ARE THE PROPERTY OF THE AMPHENOL CORPORATION. NO RIGHTS OF REPRODUCTION ARE IMPLIED. ALL DIMENSIONS ARE SUBJECT TO NORMAL MANUFACTURING VARIATIONS.

SINE Systems Corporation
A Subsidiary of Amphenol Corporation
44724 Morley Drive
Clinton Township, MI 48036

PLUG, 6 SOCKET, ATM SERIES

SIZE	FSCM NO.	DWG NO:	REVISION
B	—	C- ATM06-6S-XXX	A3

SCALE: NONE SHEET 1 OF 1

TITLE: PLUG, 6 SOCKET, ATM SERIES
DWG NO: C- ATM06-6S-XXX
REV: A3
SH: 1
OF: 1

AMEYA360
Components Supply Platform

Authorized Distribution Brand :

Website :

Welcome to visit www.ameya360.com

Contact Us :

- **Address :**

  401 Building No.5, JiuGe Business Center, Lane 2301, Yishan Rd
  Minhang District, Shanghai , China

- **Sales :**

  Direct +86 (21) 6401-6692

  Email amall@ameya360.com

  QQ 800077892

  Skype ameyasales1 ameyasales2

- **Customer Service :**

  Email service@ameya360.com

- **Partnership :**

  Tel +86 (21) 64016692-8333

  Email mkt@ameya360.com