DS9034PC/PCI PowerCap

www.maxim-ic.com

FEATURES

- Provides 10 years of battery backup power for Nonvolatile (NV) SRAMs in the PowerCap Module (PCM) package
- Snaps directly onto a surface-mounted PowerCap module base to form a complete NV SRAM module
- Attaches after module base has been surface-mounted to protect lithium battery from the high temperatures of reflow soldering
- Maintains mechanical and electrical connection with module base even during severe shock and vibration stresses
- Detachment feature allows easy removal using a regular screwdriver
- Periodic replacement allows NV SRAM module life to be extended indefinitely
- Optional industrial temperature range of -40°C to +85°C, designated PCI
- Compatible with these PowerCap module bases:

  - DS1230YP/ABP/WP
  - DS1245YP/ABP/WP
  - DS1250YP/ABP/WP

  - DS1330YP/ABP/WP
  - DS1345YP/ABP/WP
  - DS1350YP/ABP/WP

PACKAGE OUTLINE

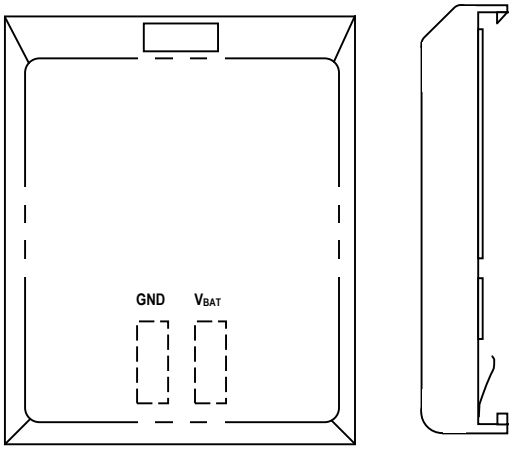

TOP VIEW

SIDE VIEW

PIN DESCRIPTION

V_{BAT}	- +3V Battery Output
GND	- Ground

ABSOLUTE MAXIMUM RATINGS

Operating Temperature: 0°C to +70°C, -40°C to +85°C for PCI parts

Storage Temperature: -40°C to +70°C, -40°C to +85°C for PCI parts

BATTERY CHARACTERISTICS

Nominal Voltage	3V
Nominal Capacity	130mAh
Chemistry	$Li(CF)_X$
Data Retention Life	10 Years (25°C)

DESCRIPTION

The DS9034PC PowerCap is a snap-on lithium power source for NV SRAMs in Dallas Semiconductor's directly surface-mountable PowerCap module base package. After a PowerCap module has been soldered in place and cleaned, the DS9034PC PowerCap is snapped onto the base to form a complete NV SRAM module. The PowerCap is keyed to prevent incorrect attachment and is designed to maintain mechanical and electrical contact with its host module base even during severe mechanical shock and vibration. The DS9034PC is easily removed by inserting a regular screwdriver into the detachment feature and prying gently outward and upward to release the PowerCap from the module base.

POWERCAP ATTACHMENT

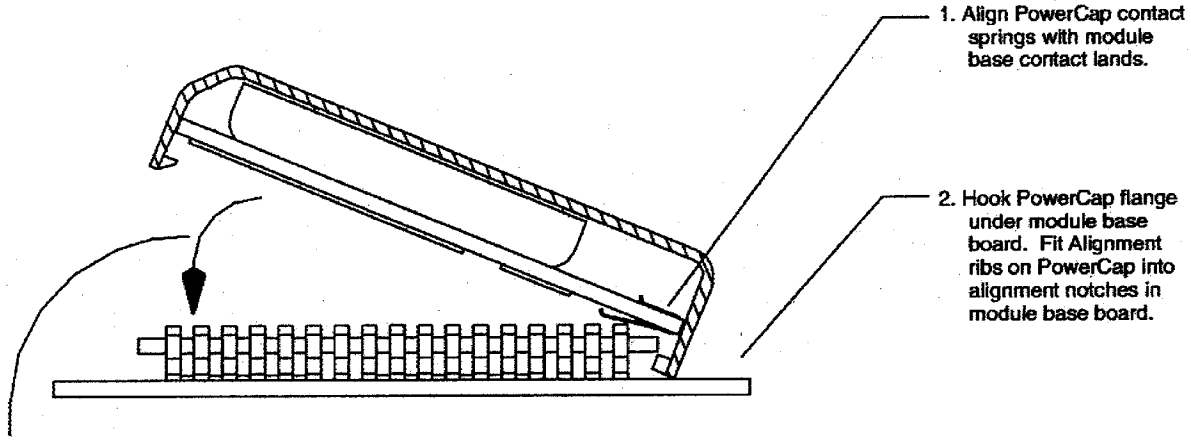

3. Push down slot side of PowerCap until it snaps onto module base.

POWERCAP REMOVAL

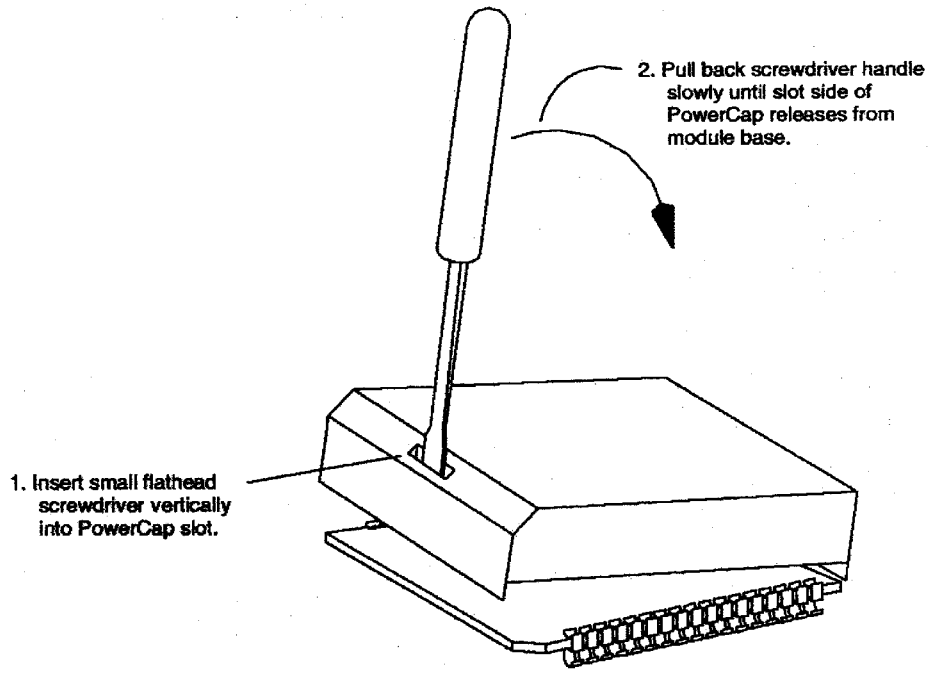

DS9034PC PACKAGE DIMENSIONS

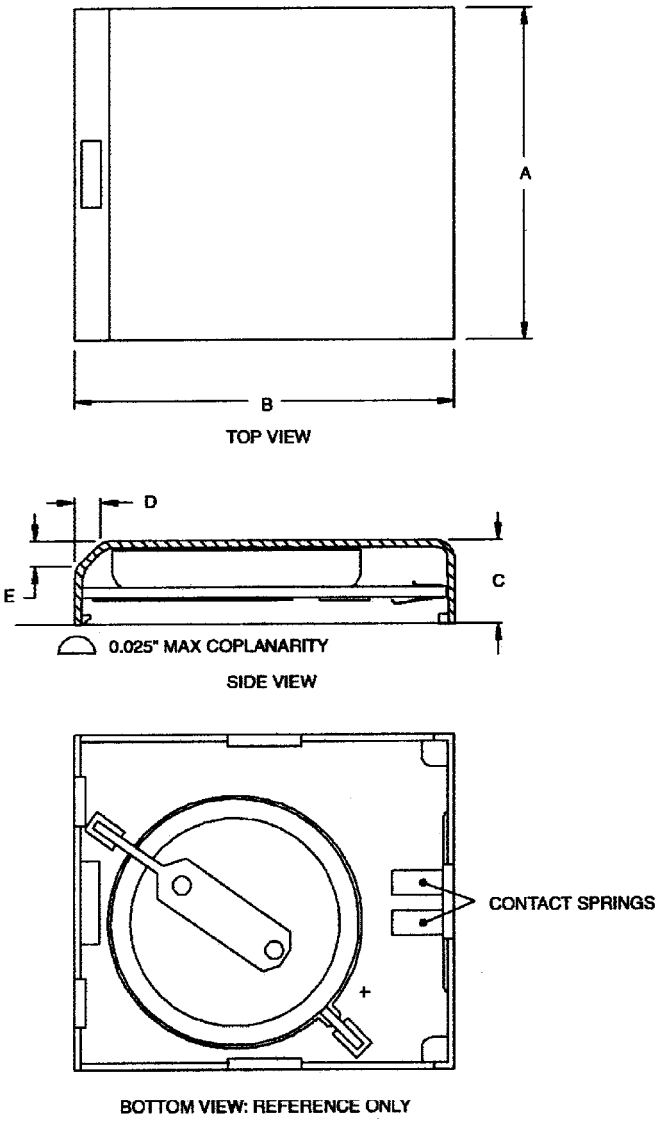

PKG	INCHES		
DIM	MIN	NOM	MAX
A	0.845	0.850	0.855
B	0.955	0.960	0.965
C	0.210	0.215	0.220
D	0.065	0.070	0.075
E	0.065	0.070	0.075

ATTENTION: BATTERY COMPONENT

The DS9034PC contains a lithium battery. Do not short, ground or apply external voltages to the electrical portions of this device. Do not expose to temperatures over +85°C. Do not subject this device to any type of cleaning process. Store only in non-conductive containers. Failure to observe these precautions may result in battery discharge or decreased battery life.

AMEYA360
Components Supply Platform

Authorized Distribution Brand :

Website :

Welcome to visit www.ameya360.com

Contact Us :

- ## Address :

401 Building No.5, JiuGe Business Center, Lane 2301, Yishan Rd
Minhang District, Shanghai , China

- ## Sales :

Direct +86 (21) 6401-6692

Email amall@ameya360.com

QQ 800077892

Skype ameyasales1 ameyasales2

- ## Customer Service :

Email service@ameya360.com

- ## Partnership :

Tel +86 (21) 64016692-8333

Email mkt@ameya360.com