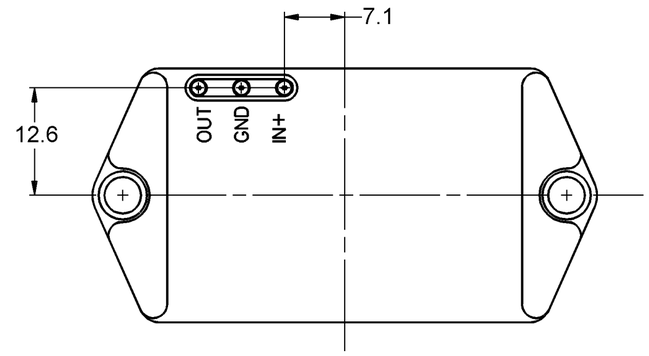

CATALOG LISTING	TYPE	OPERATING PRESSURE RANGE
142PC30A	A	0 TO 30 PSIA
142PC30D	D	0 TO 30 PSID
142PC30G	G	0 TO 30 PSIG

NOTES:
1 – INPUT MEDIA:
P1 – DRY GASES ONLY: CONNECTION SIDE OF SENSOR
P2 – LIMITED ONLY TO THOSE MEDIA THAT WILL NOT ATTACK POLYESTER, SILICON OR SILICONE BASED ADHESIVE
2 – TERMINALS ARE PLATED FOR SOLDERING
3 – LIMIT SOLDERING TO 315°C MAX FOR 10 SECONDS MAX
4 – UNITS ARE OF PLASTIC CONSTRUCTION

GENERAL OPERATING CHARACTERISTICS

PRESSURE RANGE	0 TO 1550 mmHg (0 TO 30 PSI)
OVERPRESSURE	3100 mmHg (60 PSI)
TEMPERATURE RANGES	
STORAGE	−55°C TO +125°C
OPERATING	−40°C TO +85°C
COMPENSATED	−18°C TO +63°C
SUPPLY VOLTAGE	7 TO 16 VDC
SUPPLY CURRENT	20mA MAX WITH 10K LOAD
OUTPUT VOLTAGE	PROPORTIONAL TO SUPPLY VOLTAGE OVER ABOVE RECOMMENDED RANGE
SHORT CIRCUIT LIMIT	MAY BE SHORTED INDEFINITELY
OUTPUT RIPPLE	NONE
GROUND REFERENCE	SUPPLY AND OUTPUT ARE COMMON

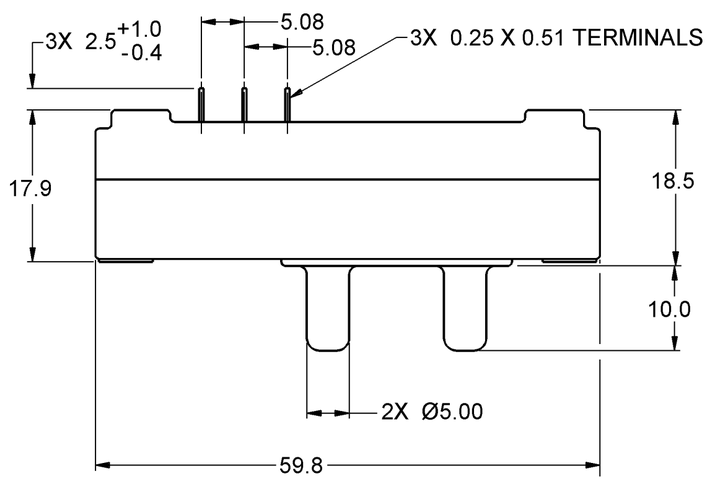

ELECTRICAL PERFORMANCE AT 25°C AND 8.00±.01 VDC SUPPLY

OUTPUT VOLTAGE	
142PC30D OR G	
NULL (0 PSIG)	1.000±.050 VDC
FULL SCALE (30 PSIG)	6.000VDC TYP P2 > P1
SPAN	5.000±.050 VDC
SENSITIVITY	166.7 mV/PSI TYP
LINEARITY (B.F.S.L.)	.75% SPAN MAX P1 > P2 1.50% SPAN MAX P2 > P1
HYSTERESIS & REPEATABILITY	.15% SPAN TYP
TEMPERATURE ERROR	
+5°C TO +45°C	.50% SPAN TYP
−18°C TO +63°C	1.00% SPAN MAX
−40°C TO +85°C	2.00% SPAN TYP
142PC30A	
NULL (0 PSIA)	1.000 VDC TYP
REFERENCE (2 PSIA)	1.333±.050 VDC
FULL SCALE (30 PSIA)	6.000 VDC TYP P1 > P2
SPAN (2 TO 30 PSIA)	4.667±.050 VDC
SENSITIVITY	166.7 mV/PSI TYP
LINEARITY (B.F.S.L.)	.80% SPAN MAX
HYSTERESIS & REPEATABILITY	.16% SPAN TYP
TEMPERATURE ERROR	
+5°C TO +45°C	.54% SPAN TYP
−18°C TO +63°C	1.07% SPAN MAX
−40°C TO +85°C	2.14% SPAN TYP

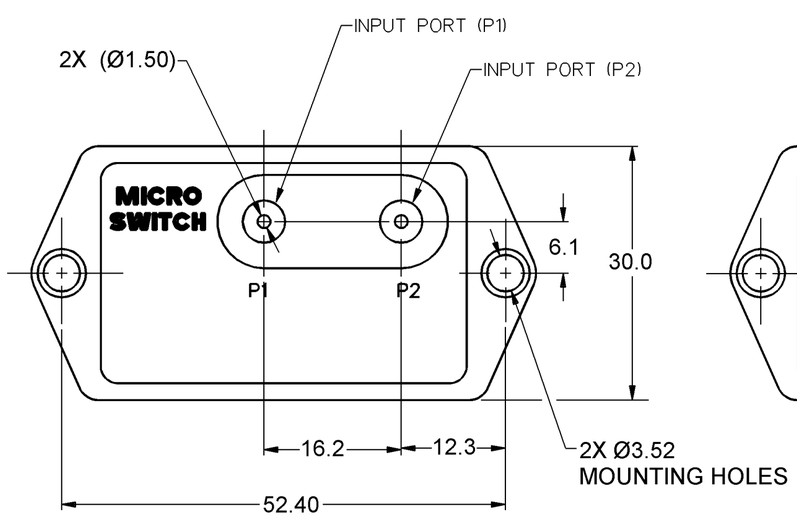

TYPE "D" (DIFFERENTIAL)

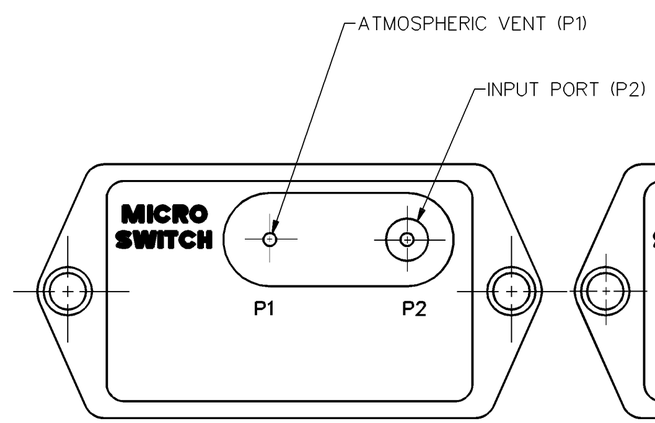

TYPE "G" (GAGE)

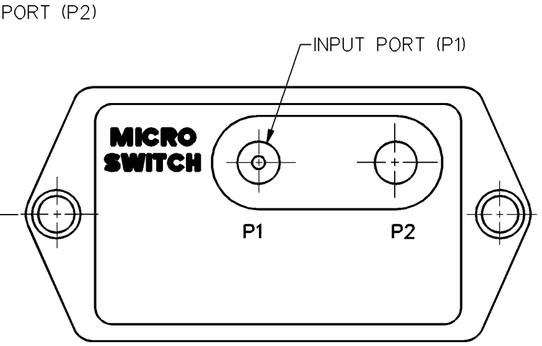

TYPE "A" (ABSOLUTE)

METRIC	INCH
0.4	.016
0.25	.010
0.51	.020
1.0	.039
1.5	.04
2.5	.099
3.52	.139
5.00	.197
5.08	.200
6.1	.240
7.1	.280
10.0	.39
12.3	.484
12.6	.496
16.2	.64
17.9	.70
18.5	.73
30.0	1.18
52.40	2.06
59.8	2.35

THIRD ANGLE PROJECTION

SCALE 2 : 1

DO NOT SCALE PRINT

UNLESS OTHERWISE SPECIFIED TOLERANCES ARE

NO PLACE	(0)	± 1 mm
ONE PLACE	(0.0)	± 0.4 mm
TWO PLACE	(0.00)	± 0.15 mm
ANGLES		±

WEIGHT 31 GRAMS

THIS DRAWING COVERS A PROPRIETARY ITEM AND IS THE PROPERTY OF MICRO SWITCH. A DIVISION OF HONEYWELL. THIS DRAWING IS NOT TO BE COPIED OR USED WITHOUT THE APPROVAL OF MICRO SWITCH.

MICRO SWITCH a Honeywell Division
FED. MFG. CODE 91929

PRESSURE TRANSDUCER

CATALOG LISTING
140PC30 SERIES
CHART 1

MASTER REDUCED
ANSI Y14.5M–1982 APPLIES

DRAWING NUMBER 140PC30 SERIES CHART 1
ISSUE 11 M PAGE 1 OF 1
RELEASE NO. PR-9393 REPLACES

REVISIONS
A C077436 J A F 17 MAY 94
B C095394 DLM 3 FEB 00
C 0064472 PRS 19MAY10

DRAWN	J A F	17MAY94	CHECK
			CHECK
			CHECK
	RS	19MAY10	CHECK
RASTER			

AMEYA360
Components Supply Platform

Authorized Distribution Brand :

Website :

Welcome to visit www.ameya360.com

Contact Us :

- Address :

401 Building No.5, JiuGe Business Center, Lane 2301, Yishan Rd
Minhang District, Shanghai , China

- Sales :

Direct +86 (21) 6401-6692

Email amall@ameya360.com

QQ 800077892

Skype ameyasales1 ameyasales2

- Customer Service :

Email service@ameya360.com

- Partnership :

Tel +86 (21) 64016692-8333

Email mkt@ameya360.com