SWITCHCRAFT, INC. 5555 N. Elston Ave.
Chicago, IL 60630 • 773 792-2700 • FAX: 773 792-2129
www.switchcraft.com

Hi-D Switch® PC MOUNT SWITCHES

SERIES H-100, H-100PC, H-200, H-200PC

SERIES H100, H200

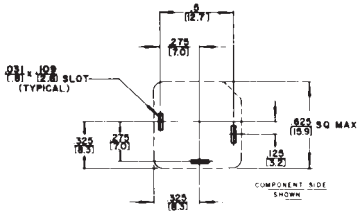

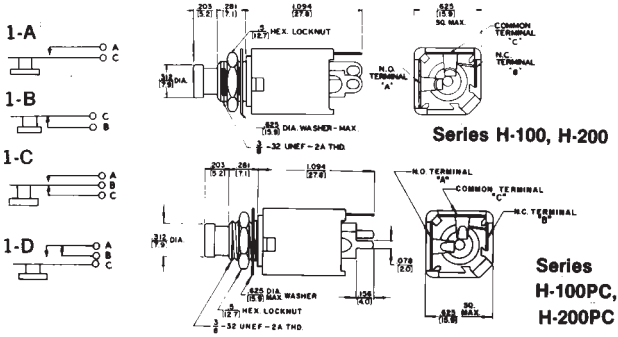

DIMENSIONS ARE FOR REFERENCE ONLY Inch / (mm)

AMEYA360
Components Supply Platform

Authorized Distribution Brand :

ROHM | Sunlord EXPERT IN PASSIVE PARTS | SSM SUSUMU Thin Film Specialist and Innovator | AVERLOGIC

2Pai Semi | Ambarella | CanaanTek | Firstohm

Website :

Welcome to visit www.ameya360.com

Contact Us :

- **Address :**

  401 Building No.5, JiuGe Business Center, Lane 2301, Yishan Rd
  Minhang District, Shanghai , China

- **Sales :**

  Direct +86 (21) 6401-6692

  Email amall@ameya360.com

  QQ 800077892

  Skype ameyasales1 ameyasales2

- **Customer Service :**

  Email service@ameya360.com

- **Partnership :**

  Tel +86 (21) 64016692-8333

  Email mkt@ameya360.com