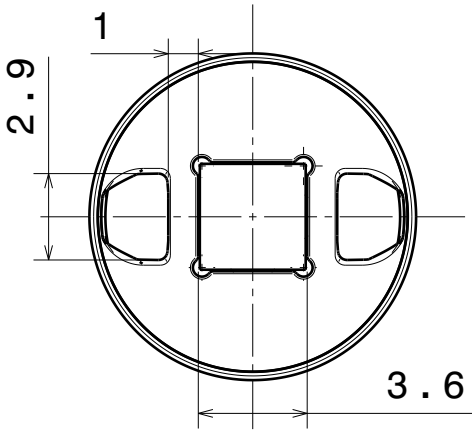

Bottom view

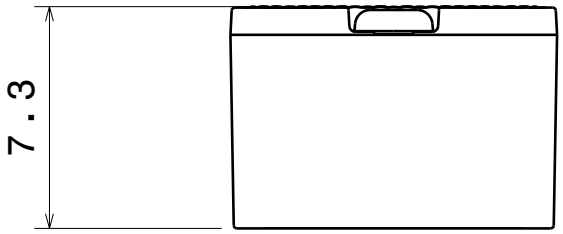

Front view

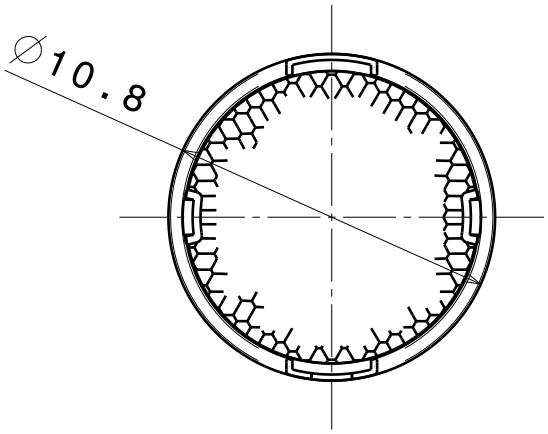

Top view

Materials:
Lens PMMA
Holder PC

This drawing is our property.
It can't be reproduced
or communicated without
our written agreement.

LEDIL

DRAWN BY p	DATE 24.10.2008	DRAWING TITLE Datasheet Lisa-XP series assy			
CHECKED BY h h	DATE 24.07.2008	SIZE A4	DRAWING NUMBER		REV 0.1
DESIGNED BY pv	DATE 23.07.2008	SCALE 4:1	WEIGHT(g)		SHEET 1/1

AMEYA360
Components Supply Platform

Authorized Distribution Brand :

Website :

Welcome to visit www.ameya360.com

Contact Us :

- ### Address :

  401 Building No.5, JiuGe Business Center, Lane 2301, Yishan Rd
  Minhang District, Shanghai , China

- ### Sales :

  Direct +86 (21) 6401-6692

  Email amall@ameya360.com

  QQ 800077892

  Skype ameyasales1 ameyasales2

- ### Customer Service :

  Email service@ameya360.com

- ### Partnership :

  Tel +86 (21) 64016692-8333

  Email mkt@ameya360.com