Product Selection Guide

TT electronics

OPTEK Technology

A Part Of Everyday Technology

OPTEK products are in applications that are a part of your everyday life. We can be found in automobiles, office equipment, vending machines, banks, hospitals, home security, architectural lighting, industrial plants, military and aerospace applications and even at sports games or concerts.

Quality
Versatility
Longevity
Reliability
Experience
Commitment
Customer Focus

Since 1968, OPTEK's engineering group has been designing solutions to our customer's needs in a variety of industries using INFRARED, VISIBLE, MAGNETIC and FIBER OPTIC technologies. This catalog lists our standard products that serve the needs of a multitude of customers. There are some applications that require slight modification to our specifications, and we are glad to accommodate these requests. So if you see a product in this selector guide, but need something a little different, please do not hesitate to contact us.

What you won't find in this catalog, but something we do quite well, are APPLICATION SPECIFIC SENSOR ASSEMBLIES. Feel free to go to our website and click on "custom sensing solutions." The pictures and descriptions there will give you a good idea of our broad range of capabilities for highly engineered and specific sensors. Give us a call and we'll be happy to discuss your requirements.

OPTEK designs in QUALITY from the start, and our manufacturing facilities are committed to producing superior product that exceeds all reliability expectations. Here is a partial list of the standards and quality processes we have embraced:

- ISO/TS 16949:2002
- BS EN ISO 9001:2000
- MIL-PRF-19500
- MIL-STD-883 including TX, TXV, B, S and ESA
- TSAT
- Six Sigma
- Lean Manufacturing
- Poka Yoke
- Kaizan

OPTEK Technology is dedicated to delivering defect free, competitive products on time to meet the requirements of our customers.

OPTEK Technology is committed to its quality management system, quality objectives and will continually improve their effectiveness.

To find out more about OPTEK products and solutions, or for technical assistance, call our technical sales department at: 1-800-341-4747 or 972-323-2200, fax: 972-323-2396 or send an e-mail to sensors@optekinc.com or visibleLED@optekinc.com
In Europe, call +33-1-34-24-8878 or send an e-mail to info@optek-europe.com
In Asia, call +852-9190-4641 or send an e-mail to thswee@optekasia.com

OPTEK Technology is headquartered in Carrollton, Texas with manufacturing facilities in Juarez, Mexico and sales representation worldwide.

Table of Contents

PART NUMBER INDEX A-1

INFRARED AND MAGNETIC COMPONENTS AND SENSORS

- Light Emitting Diodes (LED) - Definition B-2
- PhotoSensors (Diode, Transistor, Darlington) - Definition B-4
- PhotoLogic® - Definition B-6
- Fiber Optic - Definition B-8
- Hall-effect (Magnetic) - Definition B-10
- Surface Mount Chip Carrier - Definition B-12
- Hi-Reliability - Definition B-14
- Device Specific Information - Sorted by Package Type C-1

VISIBLE LED'S

- Visible Light Emitting Diode (VLED) - Definition D-2
- Through-hole D-3
- High Flux D-4
- High Power D-4
- Surface Mount D-4
- White D-5
- RGB D-6

PACKAGE CONFIGURATIONS E-1

WORLDWIDE DISTRIBUTOR LOCATIONS F-1

Please call, or see our website, for our Application Bulletins, Reliability Reports, Cross Reference and information on RoHS.

800-341-4747

Notes:

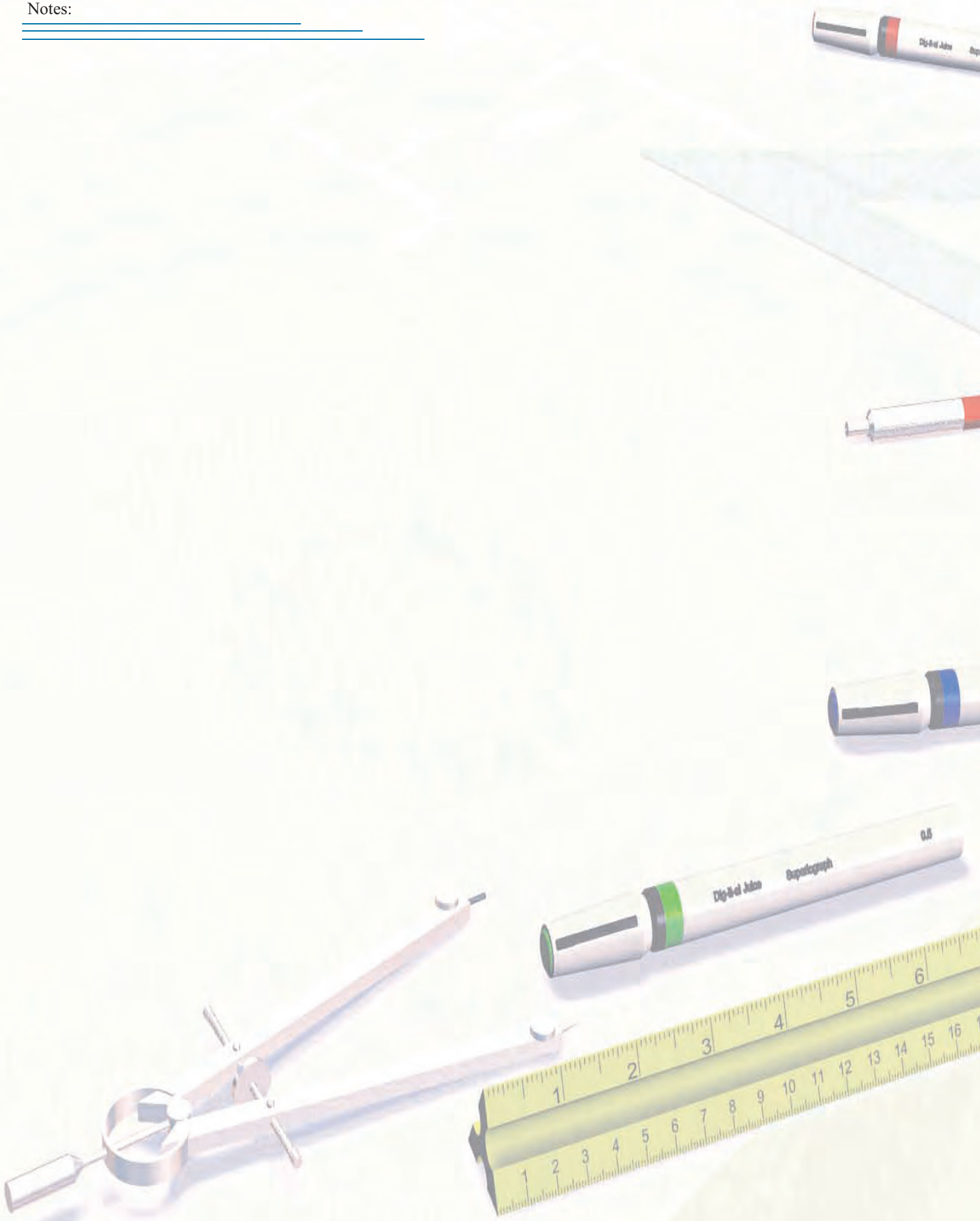

Part Number Guide

Assemblies

Part Number	Description
OHB9XX	Hall-effect Assembly
OPB3XX	Transmissive (Slotted) Switches, Transistor Output
OPB4XX	Transmissive (Slotted) Switches, Logic Output
OPB6XX	Low-Cost Reflective, Transmissive (Slotted) and Flag Switches

Part Number	Description
OPB7XX	Reflective Object Sensors
OPB8XX	Transmissive (Slotted) Switches, Transistor Output
OPB9XX	Transmissive (Slotted) Switches, Logic Output

Discrete Components

Part Number	Description
2NXX	Transistors
3NXX	Opto—Isolators
4NXX	Opto—Isolators
OMHXXX	Hi-Reliability (Military) Devices
OP1XX	GaAs Infrared Light Emitting Diode 935nm center wavelength
OP2XX	GaAlAs Infrared Light Emitting Diode 890nm center wavelength
OP3XX	PhotoDarlington — Pill Pack
OP5XX	PhotoTransistor & PhotoDarlington
OPL5XX	PhotoLogic® Sensor — Plastic Packages
OP6XX	PhotoTransistor — Pill Pack
OPS6XX	IR—Emitter & Sensor Matched Component Pair

Part Number	Description
OP7XX	PhotoTransistor with low signal reduction
OP8XX	PhotoTransistor & PhotoDarlington Metal Packages
OPL8XX	PhotoLogic® Sensor — Metal Packages
OP9XX	PhotoDiodes
OPF1XXX	Fiber Optic Transmitter
OPF2XXX	Fiber Optic Receiver
OPF3XX	Fiber Optic Light Emitting Diode (LED)
OPF4XX	Fiber Optic Sensor
OPIXXX	Optically Coupled Isolators
OPVXXX	Vertical Cavity Surface Emitting Laser (VCSEL)
OVXXXXX	Visible LEDs

Surface Mount

Part Number	Description
HCCXXX	IR—Surface Mount OptoCoupler
HCRXXX	Surface Mount Diode
HCTXXX	Surface Mount Transistor

Part Number	Description
OP2XX	GaAlAs Infrared Light Emitting Diode 890nm center wavelength
OP5XX	PhotoTransistor & PhotoDarlington
OPRXXXX	IR—Surface Mount Chip Carrier
OVXXXXX	Visible LEDs

Part Number Index

Part Number	Page C - #
2N2222AUA, 2N2222AUATX, 2N2222AUATXV	9
2N2222AUB, 2N2222AUBTX, 2N2222AUBTXV	9
2N2907AUA, 2N2907AUATX, 2N2907AUATXV	9
2N2907AUB, 2N2907AUBTX, 2N2907AUBTXV	9
2N4854U, 2N4854UTX, 2N4854UTXV	9
2N5794U, 2N5794UTX, 2N5794UTXV	9
2N5796U, 2N5796UTX, 2N5796UTXV	9
2N6987U, 2N6987UTX, 2N6987UTXV	10
2N6989U, 2N6989UTX, 2N6989UTXV	10
3C91C, 3C91CTX, 3C91CTXV	7
3C92C, 3C92CTX, 3C92CTXV	7
3N243, 3N244, 3N245	7
3N243TX, 3N244TX, 3N245TX	7
3N243TXV, 3N244TXV, 3N245TXV	7
3N261, 3N262, 3N263	7
3N261TX, 3N262TX, 3N263TX	7
3N261TXV, 3N262TXV, 3N263TXV	7
4N22A, 4N22ATX, 4N22ATXV	7
4N22AU, 4N22AUTX, 4N22AUTXV	10
4N23A, 4N23ATX, 4N23ATXV	7
4N23AU, 4N22AUTX, 4N23AUTXV	10
4N24A, 4N24ATX, 4N24ATXV	7
4N24AU, 4N24AUTX, 4N24AUTXV	10
4N47, 4N47TX, 4N47TXV	7
4N47U, 4N47UTX, 4N47UTXV	10
4N48, 4N48TX, 4N48TXV	7
4N48U, 4N48UTX, 4N48UTXV	10
4N49, 4N49TX, 4N49TXV	7
4N49U, 4N49UTX, 4N49UTXV	10
HCC240,HCC240TX,HCC240TXV	9
HCC242,HCC242TX,HCC242TXV	9

Part Number	Page C - #
HCT7000M,HCT7000MTX,HCT7000MTXV	9
HCT802, HCT802TX, HCT802TXV	10
OH090U	12
OH180U	12
OH360U	12
OHB900	13
OHN3013U, OHS3013U	12
OHN3019U, OHS3019U	12
OHN3020U, OHS3020U	13
OHN3030U, OHS3030U	13
OHN3040U, OHS3040U	13
OHN3075U, OHS3075U	13
OHN3113U	13
OHN3119U, OHS3119U	13
OHN3120U, OHS3120U	13
OHN3130U, OHS3130U	13
OHN3131U, OHS3131U	13
OHN3140U, OHS3140U	13
OHN3150U, OHS3150U	13
OHN3151U, OHS3151U	13
OHN3175U, OHS3175U	13
OHN3177U, OHS3177U	13
OMH090, OMH090B, OMH090S	12
OMH3019, OMH3019B, OMH3019S	12
OMH3020, OMH3020B, OMH3020S	12
OMH3040,OMH3040B, OMH3040S	12
OMH3075,OMH3075B, OMH3075S	12
OMH3131, OMH3131S, OMH3131S	12

Part Number	Page C - #
OP123, OP124	8
OP130, OP131, OP132, OP133	5
OP130W, OP131W, OP132W, OP133W	6
OP140A, OP140B, OP140C, OP140D	14
OP145A, OP145B, OP145C, OP145D	16
OP165A, OP165B, OP165C, OP165D	17
OP165W	18
OP166A, OP166B, OP166C, OP166D	18
OP166W	18
OP168FA, OP168FB, OP168FC	20
OP169A, OP169B, OP169C	20
OP200	11
OP223, OP223TX, OP223TVX	8
OP224	8
OP224ESA-B1, OP224ESA-B2, OP224ESA-B3	8
OP224ESA-C1, OP224ESA-C2, OP224ESA-C3	8
OP224S, OP224TX, OP224TXV	8
OP23OWPS	6
OP231, OP232, OP233.	5
OP231W, OP232W, OP233W	6
OP234	5
OP234W	6
OP235, OP235TX, OP235TXV	5
OP235W	6
OP236TX, OP236TXV	5
OP240A, OP240B, OP240C, OP240D	14
OP245A, OP245B, OP245C, OP245D	16
OP250	11
OP251	11
OP265A, OP265B, OP265C, OP265D	17
OP265W, OP265WPS	18
OP266A, OP266B, OP266C, OP266D, OP266W	18
OP268FA, OP268FB, OP268FC	20

Part Number	Page C - #
OP270, OP271, OP272, OP273	12
OP269A, OP269B, OP269C	20
OP280	11
OP290A, OP290B, OP290C	19
OP291A, OP291B, OP291C	19
OP292A, OP292B, OP292C	19
OP293A, OP293B, OP293C	19
OP294	20
OP295A, OP295B, OP295C	20
OP296A, OP296B, OP296C	20
OP297A, OP297B, OP297C	20
OP298A, OP298B, OP298C	19
OP299	20
OP300SL, OP301SL, OP302SL	8
OP303SL, OP304SL, OP305SL	8
OP505A, OP505B, OP505C, OP505D	17
OP505W	18
OP506A, OP506B, OP506C, OP506D, OP506W	18
OP508FA, OP508FB, OP508FC	20
OP509A, OP509B, OP509C	20
OP520	11
OP521	11
OP522	11
OP535A, OP535B, OP535C	17
OP538FA, OP538FB, OP538FC	20
OP550A, OP550B, OP550C, OP550D	14
OP555A, OP555B, OP555C, OP555D	16
OP560A, OP560B, OP560C	14
OP565A, OP565B, OP565C	16
OP570, OP571, OP572, OP573	12
OP580	11

Part Number	Page C - #
OP593A, OP593B, OP593C	19
OP598A, OP598B, OP598C	19
OP599A, OP599B, OP599C, OP599D	20
OP600A, OP600B, OP600C	8
OP602TX, OP602TXV	8
OP603TX, OP603TXV	8
OP604ESA-B1, OP604ESA-B2, OP604ESA-B3	8
OP604ESA-C1, OP604ESA-C2, OP604ESA-C3	8
OP604S, OP604TX, OP604TXV	8
OP641SL, OP642SL, OP643SL, OP644SL	8
OP705A, OP705B, OP705C, OP705D	17
OP750A, OP750B, OP750C, OP750D	14
OP755A, OP755B, OP755C, OP755D	16
OP770A, OP770B, OP770C, OP770D	14
OP775A, OP775B, OP775C, OP775D	16
OP793A, OP793B, OP793C, OP793D	19
OP798A, OP798B, OP798C, OP798D	19
OP800A, OP800B, OP800C, OP800D	4
OP800SL, OP801SL, OP802SL	4
OP800WSL, OP801WSL, OP802WSL	7
OP803SL, OP803TX, OP803TXV	4
OP804SL, OP804TX, OP804TXV	4
OP805SL, OP805TX, OP805TXV	4
OP830SL	4
OP830WSL	7
OP900SL	8
OP905	17
OP906	18
OP910	5
OP910W	7
OP913SL, OP913WSL	5

Part Number	Page C - #
OP950	14
OP954	16
OP955	16
OP993	19
OP999	20
OPB100Z, OPB100EZ, OPB100SZ	50
OPB120A, OPB120B	30
OPB121A, OPB121B	30
OPB122A, OP122B	30
OPB123A, OP123B	30
OPB200	32
OPB202	32
OPB350, OPB350-187, OPB350-250	35
OPB350W187Z, OPB350W250Z	47
OPB355L	29
OPB355N	32
OPB355P	37
OPB355T	41
OPB360L11, OPB360L51, OPB360L55	29
OPB360N11, OPB360N51, OPB360N55	32
OPB360P11, OPB360P51, OPB360P55	37
OPB360T11, OPB360T51, OPB360T55	41
OPB365L11, OPB365L51, OPB365L55	29
OPB365N11, OPB365N51, OPB365N55	32
OPB365P11, OPB365P51, OPB365P55	37
OPB365T11, OPB365T51, OPB365T55	41
OPB370L11, OPB370L51, OPB370L55	29
OPB370N11, OPB370N51, OPB370N55	32
OPB370P11, OPB370P51, OPB370P55	37
OPB370T11, OPB370T51, OPB370T55	41

Part Number	Page C - #
OPB375L11, OPB375L51, OPB375L55	29
OPB375N11, OPB375N51, OPB375N55	32
OPB375P11, OPB375P51, OPB375P55	37
OPB375T11, OPB375T51, OPB375T55	41
OPB380L11Z, OPB380L51Z, OPB380L55Z	30
OPB380N11Z, OPB380N51Z, OPB380N55Z	34
OPB380P11Z, OPB380P51Z, OPB380P55Z	39
OPB380T11Z, OPB380T51Z, OPB380T55Z	43
OPB390L11Z, OPB390L51Z, OPB390L55Z	30
OPB390N11Z, OPB390N51Z, OPB390N55Z	34
OPB390P11Z, OPB390P51Z, OPB390P55Z	39
OPB390T11Z, OPB390T51Z, OPB390T55Z	43
OPB460L11	31
OPB460N11	35
OPB460P11	39
OPB460T11	44
OPB461L11	31
OPB461N11	35
OPB461P11	39
OPB461T11	44
OPB462L11	31
OPB462N11	35
OPB462P11	39
OPB462T11	44
OPB463L11	31
OPB463N11	35
OPB463P11	39
OPB463T11	44
OPB470L11	31
OPB470N11	35
OPB470P11	39
OPB470T11	44
OPB471L11	31
OPB471N11	35

Part Number	Page C - #
OPB471P11	39
OPB471T11	44
OPB472L11	31
OPB472N11	35
OPB472P11	39
OPB472T11	44
OPB473L11	31
OPB473N11	35
OPB473P11	39
OPB473T11	44
OPB480L11Z	31
OPB480N11Z	36
OPB480P11Z	40
OPB480T11Z	45
OPB481L11Z	31
OPB481N11Z	36
OPB481P11Z	40
OPB481T11Z	45
OPB482L11Z	31
OPB482N11Z	36
OPB482P11Z	40
OPB482T11Z	45
OPB483L11Z	31
OPB483N11Z	36
OPB483P11Z	40
OPB483T11Z	45
OPB490L11Z	31
OPB490N11Z	36
OPB490P11Z	40
OPB490T11Z	45
OPB491L11Z	31
OPB491N11Z	36
OPB491P11Z	40
OPB491T11Z	45

Part Number	Page C - #
OPB492L11Z	31
OPB492N11Z	36
OPB492P11Z	40
OPB492T11Z	45
OPB493L11Z	31
OPB493N11Z	36
OPB493P11Z	40
OPB493T11Z	45
OPB606A, OPB606B, OPB606C	26
OPB607A, OPB607B, OPB607C	26
OPB608A, OPB608B, OPB608C, OPB608R, OPB608V	26
OPB610	33
OPB615, OPB616, OPB617, OPB618	35
OPB620	33
OPB621	33
OPB625, OPB626, OPB627, OPB628	35
OPB660N, OPB660T	33, 41
OPB665N, OPB666N	35
OPB665T, OPB666T	44
OPB667N, OPB668N	35
OPB667T, OPB668T	44
OPB680, OPB680-20	49
OPB685, OPB686,OPB687,OPB688	49
OPB690Z	50
OPB695AZ, OPB695BZ, OPB695CZ	50
OPB696AZ, OPB696BZ, OPB696CZ	50
OPB697AZ, OPB697BZ, OPB697CZ	50
OPB698AZ, OPB698BZ, OPB698CZ	50
OPB700Z, OPB700ALZ, OPB700TX, OPB70TXV	27
OPB701Z, OPB701ALZ	27
OPB702, OPB702D, OPB702R	27
OPB703, OPB703WZ	27
OPB704, OPB704WZ	27

Part Number	Page C - #
OPB705, OPB705WZ	27
OPB706A, OPB706B, OPB706C	26
OPB707A, OPB707B, OPB707C	26
OPB708,OPB709	27
OPB710, OPB710F	26
OPB711	26
OPB712	26
OPB715Z, OPB716Z, OPB717Z, OPB718Z	26
OPB720-24Z	26
OPB730, OPB730F	26
OPB732, OPB732WZ	27
OPB740, OPB740WZ, OPB740W24Z	27
OPB741, OPB741WZ, OPB741W24Z	27
OPB742, OPB742WZ, OPB742W24Z	27
OPB743, OPB743WZ, OPB743W24Z	27
OPB744, OPB744WZ, OPB744W24Z	27
OPB745, OPB745WZ, OPB745W24Z	27
OPB750N, OPB755NZ	28
OPB750T, OPB755TZ	28
OPB760N, OPB761N	28
OPB760T, OPB761T	28
OPB762N, OPB763N	28
OPB762T, OPB763T	28
OPB770NZ, OPB771NZ	28
OPB770TZ, OPB771TZ	28
OPB772NZ, OPB773NZ	28
OPB772TZ, OPB773TZ	28
OPB800L51,OPB800L55	41
OPB800W51Z, OPB800W55Z	43
OPB801L51, OPB801L55	41
OPB801W51Z, OPB801W55Z	43
OPB802L51, OPB802L55	41
OPB802W51Z, OPB802W55Z	43

Part Number	Page C - #
OPB804	33
OPB806	41
OPB810L51, OPB810L55	41
OPB810W51Z, OPB810W55Z	43
OPB811L55	41
OPB811W55Z	43
OPB812L55	41
OPB812W55Z	43
OPB815L	42
OPB815WZ	44
OPB816Z	46
OPB817Z	46
OPB818	33
OPB819Z	47
OPB820, OPB820S3, OPB820S5, OPB820S10	37
OPB821Z, OPB821S3Z, OPB821S5Z, OPB821S10Z	39
OP821TX, OP821TXV	39
OPB822S, OPB822SD	47
OPB825	33
OPB825A	37
OPB825B	42
OPB826S, OPB826SD	33
OPB827A, OPB827B, OPB827C, OPB827D	42
OPB828A, OPB828B, OPB828C, OPB828D	42
OPB829AZ, OPB829BZ, OPB829CZ, OPB829DZ	44
OPB830L11, OPB830L51, OPB830L55	47
OPB830W11Z, OPB830W51Z, OPB830W55Z	48
OPB831L51, OPB831L55	47
OPB831W51Z, OPB831W55Z	48
OPB832L51, OPB832L55	47
OPB832W51Z, OPB832W55Z	48

Part Number	Page C - #
OPB835L11, OPB835L51, OPB835L55	48
OPB836L11, OPB836L51, OPB836L55	48
OPB837L11, OPB837L51, OPB837L55	48
OPB840L11, OPB840L51, OPB840L55	48
OPB840W11Z, OPB840W51Z, OPB840W55Z	48
OPB841L51, OPB841L55	48
OPB841W51Z, OPB841W55Z	48
OPB842L51, OPB842L55	48
OPB842W51Z, OPB842W55Z	48
OPB845L11, OPB845L51, OPB845L55	48
OPB846L11, OPB846L51, OPB846L55	48
OPB847L11, OPB847L51, OPB847L55	48
OPB847, OPB848	33
OPB847TX, OPB847TXV, OPB848TX, OPB848TXV	33
OPB850A, OPB850-1Z	50
OPB852A1, OPB852A2, OPB852A3	42
OPB853A1, OPB853A2, OPB853A3	42
OPB854A1, OPB854B1	33
OPB854A2, OPB854B2	29
OPB854A3, OPB854B3	42
OPB855	33
OPB856Z	50
OPB857Z	50
OPB859	42
OPB860L11, OPB860L51, OPB860L55	29
OPB860N11, OPB860N51, OPB860N55	33
OPB860P11, OPB860P51, OPB860P55	37
OPB860T11, OPB860T51, OPB860T55	42
OPB861L51, OPB861L55	29
OPB861N51, OPB861N55	33
OPB861P51, OPB861P55	37
OPB861T51, OPB861T55	42

Part Number	Page C - #
OPB862L51, OPB862L55	29
OPB862N51, OPB862N55	33
OPB862P51, OPB862P55	37
OPB865L11, OPB865L51, OPB865L55	29
OPB865N11, OPB865N51, OPB865N55	33
OPB865P11, OPB865P51, OPB865P55	37
OPB865T11, OPB865T51, OPB865T55	42
OPB866L51, OPB866L55	29
OPB866N51, OPB866N55	33
OPB866P51, OPB866P55	38
OPB866T51, OPB866T55	42
OPB867L51, OPB867L55	29
OPB867N51, OPB867N55	33
OPB867P51, OPB867P55	38
OPB867T51, OPB867T55	42
OPB870L11, OPB870L11TX, OPB870L11TXV	29
OPB870L51, OPB870L51TX, OPB870L51TXV	29
OPB870L55, OPB870L55TX, OPB870L55TXV	29
OPB870N11, OPB870N11TX, OPB870N11TXV	33
OPB870N51, OPB870N51TX, OPB870N51TXV	34
OPB870N55, OPB870N55TX, OPB870N55TXV	34
OPB870P11, OPB870P11TX, OPB870P11TXV	38
OPB870P51, OPB870P51TX, OPB870P51TXV	38
OPB870P55, OPB870P55TX, OPB870P55TXV	38
OPB870T11, OPB870T11TX, OPB870T11TXV	42
OPB870T51, OPB870T51TX, OPB870T51TXV	42
OPB870T55, OPB870T55TX, OPB870T55TXV	43
OPB871L51, OPB871L51TX, OPB871L51TXV	29
OPB871L55, OPB871L55TX, OPB871L55TXV	29
OPB871N51, OPB871N51TX, OPB871N51TXV	34
OPB871N55, OPB871N55TX, OPB871N55TXV	34
OPB871P51, OPB871P51TX, OPB871P51TXV	38
OPB871P55, OPB871P55TX, OPB871P55TXV	38

Part Number	Page C - #
OPB871T51, OPB871T51TX, OPB871T51TXV	43
OPB871T55, OPB871T55TX, OPB871T55TXV	43
OPB872L51, OPB872L51TX, OPB872L51TXV	30
OPB872L55, OPB872L55TX, OPB872L55TXV	30
OPB872N51, OPB872N51TX, OPB872N51TXV	34
OPB872N55, OPB872N55TX, OPB872N55TXV	34
OPB872P51, OPB872P51TX, OPB872P51TXV	38
OPB872P55, OPB872P55TX, OPB872P55TXV	38
OPB872T51, OPB872T51TX, OPB872T51TXV	43
OPB872T55, OPB872T55TX, OPB872T55TXV	43
OPB875L11, OPB875L51, OPB875L55	30
OPB875N11, OPB875N51, OPB875N55	34
OPB875P11, OPB875P51, OPB875P55	38
OPB875T11, OPB875T51, OPB875T55	43
OPB876L51, OPB876L55	30
OPB876N51, OPB876N55	34
OPB876P51, OPB876P55	38
OPB876T51, OPB876T55	43
OPB877L51, OPB877L55	30
OPB877N51, OPB877N55	34
OPB877P51, OPB877P55	38
OPB877T51, OPB877T55	43
OPB880L11Z, OPB880L51Z, OPB880L55Z	30
OPB880N11Z, OPB880N51Z, OPB880N55Z	34
OPB880P11Z, OPB880P51Z, OPB880P55Z	39
OPB880T11Z, OPB890T51Z, OPB880T55Z	44
OPB881L51Z, OPB881L55Z	30
OPB881N51Z, OPB881N55Z	34
OPB881P51Z, OPB881P55Z	39
OPB881T51Z, OPB881T55Z	44
OPB882L51Z, OPB882L55Z	30
OPB882N51Z, OPB882N55Z	34
OPB882P51Z, OPB882P55Z	39
OPB882T51Z, OPB882T55Z	44
OPB885Z	38

Part Number	Page C - #
OPB890L11Z, OPB890L51Z, OPB890L55Z	30
OPB890N11Z, OPB890N51Z, OPB890N55Z	34
OPB890P11Z, OPB890P51Z, OPB890P55Z	39
OPB890T11Z, OPB890T51Z, OPB890T55Z	44
OPB891L51Z, OPB891L55Z	30
OPB891N51Z, OPB891N55Z	34
OPB891P51Z, OPB891P55Z	39
OPB891T51Z, OPB891T55Z	44
OPB892L51Z, OPB892L55Z	30
OPB892N51Z, OPB892N55Z	34
OPB892P51Z, OPB892P55Z	39
OPB892T51Z, OPB892T55Z	44
OPB900L55, OPB901L55	45
OPB900W55Z, OPB901W55Z	46
OPB902L55, OPB903L55	45
OPB902W55Z, OPB903W55Z	46
OPB910L55, OPB911L55	45
OPB910W55Z, OPB911W55Z	46
OPB912L55, OPB913L55	45
OPB912W55Z, OPB913W55Z	46
OPB916BZ, OPB916BOCZ, OPB916IZ, OPB916IOCZ	47
OPB917BZ, OPB917BOCZ, OPB917IZ, OPB917IOCZ	47
OPB930L51, OPB930L55	48
OPB930W51Z, OPB930W55Z	49
OPB931L51, OPB931L55	48
OPB931W51Z, OPB931W55Z	49
OPB932L51, OPB932L55	49
OPB932W51Z, OPB932W55Z	49
OPB933L51, OPB933L55	49
OPB933W51Z, OPB933W55Z	49
OPB940L51, OPB940L55	49
OPB940W51Z, OPB940W55Z	49
OPB941L51, OPB941L55	49
OPB941W51Z, OPB941W55Z	49

Part Number	Page C - #
OPB942L51, OPB942L55	49
OPB942W51Z, OPB942W55Z	49
OPB943L51, OPB943L55	49
OPB943W51Z, OPB943W55Z	49
OPB950Z	32
OPB960L11, OPB960L51, OPB960L55	31
OPB960N11, OPB960N51, OPB960N55	35
OPB960P11, OPB960P51, OPB960P55	39
OPB960T11, OPB960T51, OPB961T55	44
OPB961L11, OPB961L51, OPB961L55	31
OPB961N11, OPB961N51, OPB961N55	35
OPB961P11, OPB961P51, OPB961P55	40
OPB961T11, OPB961T51, OPB961T55	45
OPB962L11, OPB962L51, OPB962L55	31
OPB962N11, OPB962N51, OPB962N55	36
OPB962P11, OPB962P51, OPB962P55	40
OPB962T11, OPB962T51, OPB962T55	45
OPB963L11, OPB963L51, OPB963L55	31
OPB963N11, OPB963N51, OPB963N55	36
OPB963P11, OPB963P51, OPB963P55	40
OPB963T11, OPB963T51, OPB963T55	45
OPB970L11, OPB970L51, OPB970L55	31
OPB970N11, OPB970N51, OPB970N55	36
OPB970P11, OPB970P51, OPB970P55	40
OPB970T11, OPB970T51, OPB971T55	45
OPB971L11, OPB971L51, OPB971L55	31
OPB971N11, OPB971N51, OPB971N55	36
OPB971P11, OPB971P51, OPB971P55	40
OPB971T11, OPB971T51, OPB971T55	45
OPB972L11, OPB972L51, OPB972L55	31
OPB972N11, OPB972N51, OPB972N55	36
OPB972P11, OPB972P51, OPB972P55	40
OPB972T11, OPB972T51, OPB972T55	45

Part Number	Page C - #
OPB973L11, OPB973L51, OPB973L55	31
OPB973N11, OPB973N51, OPB973N55	36
OPB973P11, OPB973P51, OPB973P55	40
OPB973T11, OPB973T51, OPB973T55	45
OPB980L11Z, OPB980L51Z, OPB980L55Z	31
OPB980N11Z, OPB980N51Z, OPB980N55Z	36
OPB980P11Z, OPB980P51Z, OPB980P55Z	40
OPB980T11Z, OPB980T51Z, OPB981T55Z	46
OPB981L11Z, OPB981L51Z, OPB981L55Z	31
OPB981N11Z, OPB981N51Z, OPB981N55Z	36
OPB981P11Z, OPB981P51Z, OPB981P55Z	40
OPB981T11Z, OPB981T51Z, OPB981T55Z	46
OPB982L11Z, OPB982L51Z, OPB982L55Z	32
OPB982N11Z, OPB982N51Z, OPB982N55Z	36
OPB982P11Z, OPB982P51Z, OPB982P55Z	40
OPB982T11Z, OPB982T51Z, OPB982T55Z	46
OPB983L11Z, OPB983L51Z, OPB983L55Z	32
OPB983N11Z, OPB983N51Z, OPB983N55Z	36
OPB983P11Z, OPB983P51Z, OPB983P55Z	40
OPB983T11Z, OPB983T51Z, OPB983T55Z	46
OPB990L11Z, OPB990L51Z, OPB990L55Z	32
OPB990N11Z, OPB990N51Z, OPB990N55Z	37
OPB990P11Z, OPB990P51Z, OPB990P55Z	40
OPB990T11Z, OPB990T51Z, OPB991T55Z	46
OPB991L11Z, OPB991L51Z, OPB991L55Z	32
OPB991N11Z, OPB991N51Z, OPB991N55Z	37
OPB991P11Z, OPB991P51Z, OPB991P55Z	41
OPB991T11Z, OPB991T51Z, OPB991T55Z	46
OPB992L11Z, OPB992L51Z, OPB992L55Z	32
OPB992N11Z, OPB992N51Z, OPB992N55Z	37
OPB992P11Z, OPB992P51Z, OPB992P55Z	41
OPB992T11Z, OPB992T51Z, OPB992T55Z	46

Part Number	Page C - #
OPB993L11Z, OPB993L51Z, OPB993L55Z	32
OPB993N11Z, OPB993N51Z, OPB993N55Z	37
OPB993P11Z, OPB993P51Z, OPB993P55Z	41
OPB993T11Z, OPB993T51Z, OPB993T55Z	46
OPF1412, OPF1412T	24
OPF1414, OPF1414T	24
OPF2412, OPF2412T	24
OPF2416, OPF2416T, OPF2416TC	24
OPF2418, OPF2418T, OPF2418TC	24
OPF320A, OPF320B, OPF320C	6
OPF322A, OPF322B, OPF322C	22
OPF3280	21
OPF340A, OPF340B, OPF340C, OPF340D	6
OPF342A, OPF342B, OPF342C,OPF342D	22
OPF345A, OPF345B, OPF345C,OPF345D	6
OPF347A, OPF347B, OPF347C,OPF347D	22
OPF370A, OPF370B, OPF370C,OPF370D	21
OPF372A, OPF372B, OPF372C,OPF372D	22
OPF390A, OPF390B, OPF390C,OPF390D	21
OPF392A, OPF392B, OPF392C,OPF392D	22
OPF395A, OPF395B, OPF395C,OPF395D	21
OPF397A, OPF397B, OPF397C,OPF397D	22
OPF4135	21
OPF420	6
OPF422	23
OPF430	6
OPF432	23
OPF470	21
OPF472	23
OPF480	21
OPF482	23

Part Number	Page C - #
OPF500	21
OPF502	23
OPF505	6
OPF507	23
OPF510	21
OPF512	23
OPF515	6
OPF517	23
OPF520	21
OPF522	23
OPF560	21
OPF562	23
OPF692-1, OPF692-2	22
OPF693-1, OPF693-2	22
OPF694-1, OPF694-2	22
OPF792	22
OPF793	22
OPF794	23
OPI110, OPI110A, OPI110B, OPI110C	25
OPI113	25
OPI120, OPI120TX, OPI120TXV	25
OPI123	25
OPI125, OPI125TX, OPI125TXV	25
OPI126, OPI127, OPI128	25
OPI1264, OPI1264A, OPI1264B, OPI1264C	25
OPI1266	25
OPI1268	25
OPI150, OPI150TX, OPI150TXV	25
OPI153, OPI155	25

Part Number	Page C - #
OPI7002	25
OPI7010	25
OPI7320	25
OPI7340	25
OPL530, OPL530A, OPL530B	15
OPL530-OC, OPL530-OCA, OPL530-OCB	15
OPL531, OPL531A, OPL531B	15
OPL531-OC, OPL531-OCA, OPL531-OCB	15
OPL535, OPL535A, OPL535B	17
OPL535-OC, OPL535-OCA, OPL535-OCB	17
OPL536, OPL536A, OPL536B	17
OPL536-OC, OPL536-OCA, OPL536-OCB	17
OPL550, OPL550A, OPL550-OC, OPL550-OCA	15
OPL551, OPL551A, OPL551-OC, OPL551-OCA	15
OPL560, OPL560A, OPL560-OC, OPL560-OCA	15
OPL561, OPL561A, OPL561-OC, OPL561-OCA	15
OPL562, OPL562A, OPL562-OC, OPL562-OCA	15
OPL563, OPL563A, OPL563-OC, OPL563-OCA	15
OPL583	17
OPL800, OPL800-OC	4
OPL801, OPL801-OC	4
OPL810, OPL810-OC	4
OPL811, OPL811-OC	4
OPL812, OPL812-OC	4
OPL813, OPL813-OC	4
OPL820, OPL820-OC	4
OPL821, OPL821-OC	4

Part Number	Page C - #
OPR2100	11
OPR2101	11
OPR5005	11
OPR5011	11
OPR5200	10
OPR5500	10
OPR5910	10
OPR5911	11
OPR5913	10
OPR5915	10
OPR5925	11
OPS665, OPS666, OPS667	18
OPS690, OPS691, OPS692, OPS693	14
OPS695, OPS696, OPS697, OPS698	16
OPV300	6
OPV310	6
OPV314, OPV314Y	5
OPV314AT, OPV314YAT, OPV314BT, OPV314YBT	23
OPV315, OPV315Y	5
OPV315AT, OPV315YAT, OPV315BT, OPV315YBT	23
OPV600	6

Part Number	Page D - #
OVFSAAC8	4
OVFSB6C8	4
OVFSG6C8	4
OVFSQ4C8	4
OVFSRAC8	4
OVFSW6C8	4, 5
OVLAB6CB8	3
OVLAG6CB8	3
OVLAS6CB8	3
OVLAW4CB6	5
OVLBB4C7	3
OVLBG4C7	3
OVLBR4C7	3
OVLBY4C7	3
OVLEW1CB9	5
OVLEW3CB6	5
OVLEW5CB6	5
OVLFB3C7	3
OVLFG3C7	3
OVLFR3C7	3
OVLFY3C7	3
OVLGB0C6B9	3
OVLGC0C6B9	3
OVLGG0C5B9	3
OVLGJ0C3B9	3
OVLGO0C8B9	3
OVLGS0C8B9	3
OVLGY0C9B9	3
OVLHBKD8	3
OVLHGKD8	3
OVLHQKD8	3
OVLHRKD8	3

Part Number	Page D - #
OVLJBGD8	3
OVLJGGD8	3
OVLJRGD8	3
OVLKBGT6	3
OVLKGGT6	3
OVLKQGT6	3
OVLLB8C7	3
OVLLG8C7	3
OVLLR8C7	3
OVLLY8C7	3
OVS9WBCR9	6
OVSAABC2R8	4
OVSAABLCR8	4
OVSABBC2R8	4
OVSACBC2R8	4
OVSAGBC2R8	4
OVSAQBLCR8	4
OVSARGB3R8	6
OVSASBC2R8	4
OVSASBLCR8	4
OVSAWBCR9	5
OVSPAAC5R8	4
OVSPBCCR8	4
OVSPGCCR8	4
OVSPRAC5R8	4
OVSPW7CR8	4, 5
OVSPWFCR6	5
OVSR9ABCR8	4
OVSR9BBCR8	4
OVSR9CBCR8	4
OVSR9GBCR8	4
OVSR9RBCR8	4
OVSR9WBCR8	5

Part Number	Page D - #
OVSRRGBBC9	6
OVSRWACR6	5
OVSTKGBBCR9	6
OVSTRGBAC6	6
OVSTRGBBCR8	6
OVSTRGBFC6	6
OVSTRGBLC6	6
OVTL09LGAB	6
OVTL09LGAG	6
OVTL09LGAA	6
OVTL09LGAR	6
OVTL09LGAW	6

Notes:

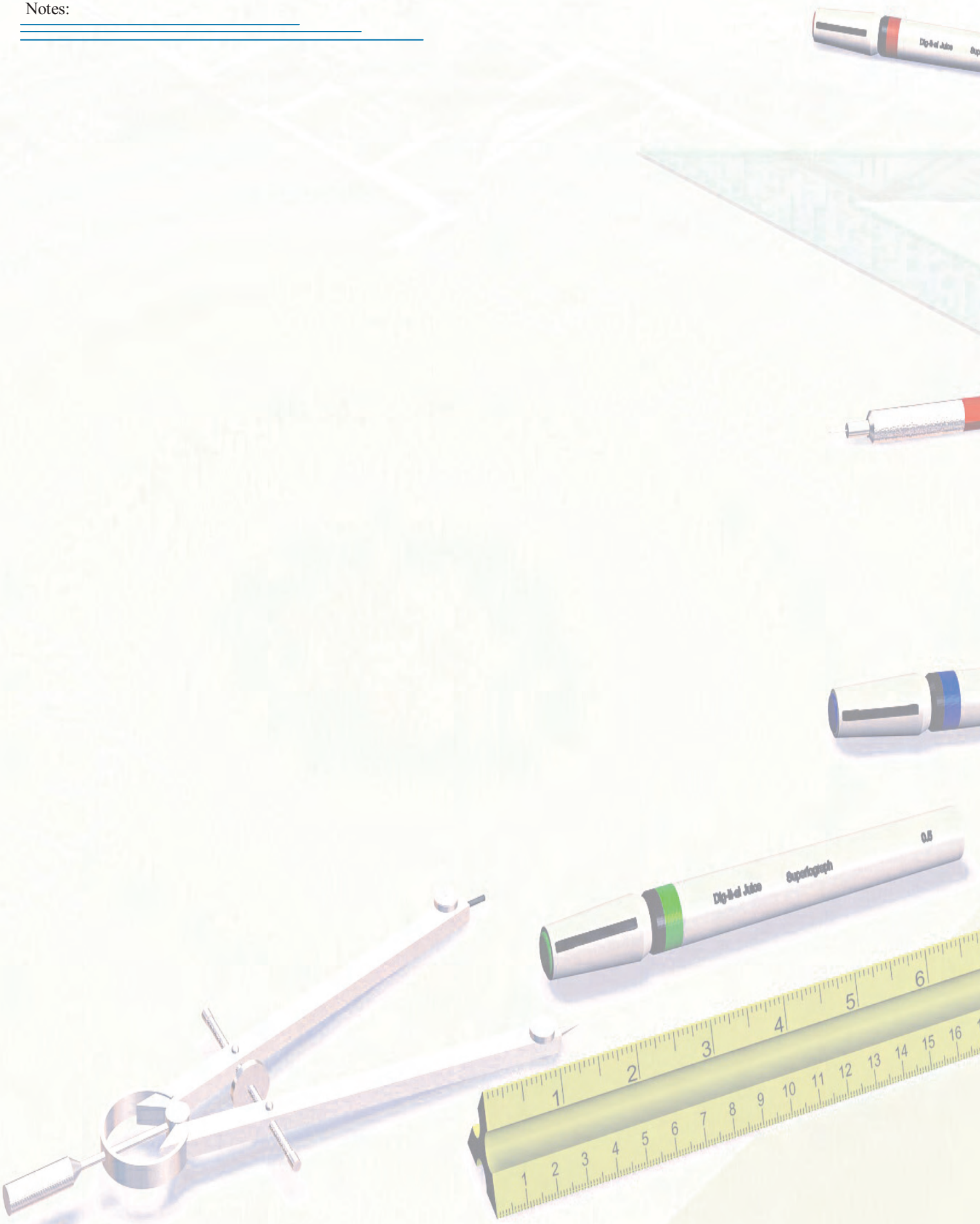

Infrared, Magnetic Components and Sensors

Definitions

Light Emitting Diodes (LED) B-2

PhotoSensors (Diode, Transistor, Darlington) B-4

PhotoLogic® B-6

Fiber Optic B-8

Hall-effect (Magnetic) B-10

Surface Mount Chip Carrier B-12

Hi-Reliability B-14

Light Emitting Diodes (LEDs)

Leadership in Manufacturing

OPTEK remains unchallenged as the industry's most complete high quality source for infrared emitters. The latest state-of-the-art solution grown epitaxial techniques are used to produce high quality GaAs and GaAlAs diode materials required to make OPTEK infrared emitting diodes. This precision processing ensures high junction emission efficiency and long operating life with minimal degradation. The added benefit of over 30 years of mounting, bonding, and packaging experience makes OPTEK the undisputed technological leader in the design and production of infrared emitting diodes.

When engineers are asked which features they value most in OPTEK's electronic components, the answers most often given are quality and reliability. Assuring high quality is a philosophy that begins at product conception and is carried through the design phase and is heavily emphasized during every step in the manufacture of OPTEK infrared emitting diodes.

Output Specifications Designed for Engineering

The outputs of the vast majority of OPTEK emitters are specified using apertured radiant incidence, Ee(APT), expressed in milliwatts per square centimeter. This method, also known as on-axis intensity measurement, provides the best accuracy and convenience for the design engineer. Production testing consists of measuring 100 percent of the energy passing through a specified diameter aperture orthogonal to the optical axis, and a specified distance from the device. For OPTEK devices, the distance chosen for this measurement is equivalent to the typical operating distance from emitter to sensor. Most specifications for compatible photosensors describe output current at a specified radiant intensity, also expressed in milliwatts per square centimeter. Therefore, the design of close proximity transmissive emitter/sensor assemblies can be done more accurately, and with a minimum of optical calculations and specification conversions.

Infrared emitter manufacturers use three methods of specifying output limits on infrared emitters. These are Radiant Power Output (PO), Radiant Intensity (Ie) and Apertured Radiant Incidence [Ee(APT)]. Radiant Power Output (PO) sometimes called Total Power, is strictly interpreted as a measure of the total energy emitted from the device. OPTEK has interpreted this to include only the energy useful to most customers. Therefore, side and backward emissions are not measured. As a benchmark for comparison among devices, OPTEK devices are conservatively rated. For example, The PO reading for the useful portion of the OP295A radiation pattern is 60 percent higher when a parabolic reflector is used to capture normally unused side emissions as opposed to OPTEK's more conservative rating method. When making PO comparisons among manufacturers, the design engineer should always investigate the method of measurement.

Radiant intensity (Ie) is usually expressed in milliwatts per steradian. This method attempts to account for useable energy, where the peak intensity falls within an included angle centered around the optical axis. Through some moderately complex geometrical calculations, the energy falling on the sensor can be roughly estimated if the sensor is on or close to the optical axis and if the distance from emitter to sensor is known. However, most infrared emitters can not accurately be modeled as a point source at the close proximity used in many applications (less than four inches); therefore, this method has the potential to result in serious design errors. Additionally, it is more cumbersome than OPTEK's direct approach of characterizing emitters in terms of apertured radiant incidence.

Diode Material Selection

Gallium arsenide (GaAs) and gallium aluminum arsenide (GaAlAs) each have specific advantages when used in the manufacture of OPTEK infrared emitters. GaAs emits energy at 935 ± 15 nanometers while GaAlAs emits at 890 ± 20 nanometers. As temperature increases, these peaks shift upward by 0.26 and 0.20 nanometers per degree centigrade, respectively. Due to the spectral matching with photosensitive silicon, which exhibits a sensitivity maximum of 850 nanometers, GaAlAs has the advantage of more efficient coupling. The sensor is better able to "see" the energy emitted by GaAlAs. In addition, at equivalent forward currents, GaAlAs is typically a more efficient emitter of infrared energy.

Light Emitting Diodes (LEDs)

Package Selection

GaAs is considered to be less susceptible to output degradation than GaAlAs. While the effects of degradation on both materials are insignificant at normal operating currents (10 - 20mA), GaAs is, nevertheless, the preferable choice of material in applications where high operating currents or temperatures are expected and long-term reliability is critical.

GaAs offers a second advantage of having lower forward voltage characteristics than GaAlAs. If large numbers of devices are to be placed in series, or if power supply voltage is limited, the selection of GaAs over GaAlAs devices may be the best design choice.

Special Product Capability

The two broad classifications of package types are hermetic and plastic. Each offers its own distinct advantages. In many environments, hermetic packaging may be mandatory. It has excellent resistance to water and other solvents, while offering the broadest operating temperature range and resistance to thermal shocks. Plastic packaging, in addition to a cost advantage over the hermetic packaging, exhibits excellent optical properties. Overall emission efficiency is also superior because optical interfaces are minimized. Finally, resistance to mechanical shock and vibration is excellent because both chip and bond wire are fully encased in supportive material. Application Bulletin 208 compares these package types.

Product Packaging

In addition to the standard products shown, OPTEK leads the industry in custom product capability. Special selections or custom package designs may be the solution to your unique application problem. Call your local OPTEK representative for more information.

Tape and Reel/Ammopack

OPTEK provides product bulk packed in bags, tubes, trays, tape and reel or tape and ammopack. All products are inspected based upon OPTEK packing requirements as well as EIA-468 when applicable. Add "TR" suffix for Tape and Reel. Add "TA" suffix for Tape and Ammopack. Tape and Real or Tape and Ammopack are not available on all device types, for more information call your local representative.

PhotoSensors — Diodes, Transistors, Darlingtons

Selecting The Right OPTEK Sensors

The OPTEK line of photosensors includes four basic infrared-sensitive device types: photodiodes, phototransistors, photodarlingtons and Photologic® sensors. Each basic type is available in a variety of case styles. For every infrared emitter made by OPTEK, there is a mechanically and spectrally matched sensor. Case styles include several sizes of hermetic devices, and an even wider variety of plastic encapsulated types. Plastic versions of the popular hermetic TO-18 part are also available, offering improved optical design and drop-in replacement at substantial cost savings.

Important factors to consider when selecting the right device for an application are: operating speed required, available infrared energy, and the desired output current. Depending on the required balance of these design factors, OPTEK offers a choice of several appropriate types of photosensors

Photodiodes

PN junction silicon photodiodes have the fastest operating speed of all the photosensors in the OPTEK product family. Rise and fall times of 100 nanoseconds are typical for these devices. However, light current (IC) for these devices tends to be low; therefore, additional amplification is almost always required. Nevertheless, where speed considerations predominate, photodiodes are the best option.

Photologic® Devices

Photologic® is a term OPTEK uses to refer to complex integrated circuitry combined with a high speed, high sensitivity photodiode on a single silicon chip. Photologic® devices offer the speed advantage of photodiodes along with a Schmitt trigger and amplifier to directly drive up to eight TTL loads. Medium speed data rates to 250 kbaud are possible with typical output rise and fall times of 25 nanoseconds. These devices are excellent choices where speed, accuracy and logic interface are required. Typical examples include high speed motion encoding, modulated (pulsed) long distance beam interrupt applications, such as touch screens, and track ball type devices for video games or "mouse" applications for computer accessories.

Phototransistors and Photodarlingtons

Phototransistors and photodarlingtons are OPTEK's most widely used photosensor types. For most traditional applications, NPN silicon phototransisitors offer the best value in terms of output current, sensitivity, speed, reliability and quality. Devices with minimum on-state collector currents ranging up to 40 mA are available, while output rise and fall times of 60-100 microseconds (RL=5 KW) are typical. OPTEK phototransistors are 100 percent tested and specified at light levels which range upwards from 1.00mW/cm2 with collector-to-emitter voltage (VCE) set at 5.0 volts.

Photodarlingtons provide the higher sensitivity and gain needed for many applications; however, rise and fall times are slower. When switching time is not critical, the choice of a photodarlington can offer improved sensing reliability and reduce the need for additional signal amplification.

OPTEK Leadership in Advanced Photosensor

OPTEK scientists and engineers continue to advance the state-of-the-art in Photologic® monolithic optoelectronic IC's, a product originally conceived and developed by OPTEK. The next generation of Photologic® devices will include substantially increased sensitivity, making longer beam distances possible and offering even higher reliability at lower irradiance levels. Direct TTL and CMOS compatibility is also featured with increased sink/source capability. Supply voltage requirements are more flexible than before due to an on-chip voltage regulator designed by OPTEK. And finally, the new Photologic® devices will offer a choice of two hysteresis ratios [EeT(+)/EeT(-)] of 2 and 1.4. With these new advancements, OPTEK continues its leadership role in advanced photosensor design.

Spectral Matching for ImprovedCoupling Efficiency

OPTEK photosensors are spectrally matched to the OPTEK line of infrared emitting diodes. The output peak wavelengths for both GaAs and GaAlAs lie very close to the silicon sensitivity peak of about 850 nanometers.

PhotoSensors — Diodes, Transistors, Darlingtons

Controlling Ambient Light

The spectral response of silicon extends into the visible light range. This makes sensors vulnerable to ambient light; particularly from tungsten sources (or the sun) where red light is present. Many of OPTEK's slotted optical switches shield the sensor in an opaque housing designed to control ambient light. External light filters or controlled modulation of the LED and/or sensor may also be used to reduce the noise from ambient light. As another alternative, most photographic shops can supply infrared passing gelatin filters for laboratory experimentation. For production use, several types of plastic are commercially available with varying degrees of infrared and visible transmissivity (e.g., polysulfone and polycarbonate).

Production Specifications Written for Easy Design

The product specifications in this book were written with ease of design in mind. Emitter output and sensor response levels are specified in terms of milliwatts per square centimeter at separation distances typical for most applications

Custom Design and Selection for Unique Applications

While the OPTEK line is among the industry's broadest, a unique application requirement may result in the need for custom selection or package design. Call your local OPTEK sales office for more information.

Product Packaging

OPTEK provides product bulk packed in bags, tubes, trays, tape and reel or tape and ammopack. All products are inspected by OPTEK based on OPTEK packing requirements as well as EIA-468 when applicable. Add "TR" suffix for tape and reel. Add "TA" suffix for tape and ammopack. Tape and real or tape and ammopack are not available on all device types, for more information call your local representative.

PhotoLogic®

Historically optoelectronic components such as phototransistors have been analog output devices. The designer had to design with an output current from the phototransistor generated by a given input bias circuit. The advent of integrated circuits and microprocessors has required the electronics world to turn digital. Sophisticated electronics today communicate by logic levels of 1's or O's. This means that the design engineer must now convert the analog light current of a phototransistor to a voltage level in order to communicate the sensing function to downstream processing electronics. This signal processing represents additional system cost in components and performance specification guardbanding which can be reflected in the unit pricing of the optoelectronic component or assembly.

Photologic® discrete components utilize the best of the analog characteristics of optoelectronic components and the signal processing capabilities of linear integrated circuits and combines the two on one chip. The stable response and speed of a photodiode is used as an input to trigger the onboard integrated circuitry. The output of the optoelectronic component provides the designer a logic level output, instead of an analog current. This saves the end user processing circuitry system cost and affords performance specifications which are more easily designed and integrated into their application. In other words, single switching to an on/off state, or dynamically switched signals, as in encoders, to multiple on/off states. The resulting output will be a high logic level (1), low logic level (0) or corresponding pulse train corresponding to the synamic triggering. All Photologic® devices have internal regulation.

Output Options

The Photologic® family of photointegrated circuits is available with various output options. The output options for the buffer types (high logic level with light sensed) and inverter types (low logic level with light sensed) are a totem-pole output, 10KΩ load resistor or open-collector output. These optional output configurations are offered to afford the design engineer the most versatility in addressing their system applications.

Totem-Pole

A totem-pole configuration is very popular due to its inherent low output resistance for both a high and low output level. The low level output resistance will be the resistance at the collector of a saturated output transistor, typically in the order of 10 ohms. The high level output resistance in a totem-pole output is that of an emitter follower configuration. This is typically less than 100 ohms as compared to most collector load resistance values in the 1 kilo ohms range. The low output resistance of the totem-pole configuration in both high and low output level allows a more rapid charge and discharge of any load capacitance at the output. This results in comparable high to low and low to high transition times.

PhotoLogic®

Open-Collector

Even with the numerous advantages of the totem-pole configuration the open-collector output configuration has its place in the design world. With an open-collector output configuration the designer can configure one or more collector outputs into what is referred to as collector logic or wired logic. This is simply the ability to form a logic function using the available collector outputs. In this case the low output resistance for both the high and low output level of a totem-pole configuration is not desirable. The ability to design with wired logic can save on the number of logic gates required in a system design resulting in a cost savings.

Hysteresis

The Photologic® family incorporates a Schmitt trigger as part of the integrated circuit. The Schmitt trigger is a very useful circuit in steering the leading and trailing edges of a slowly rising or falling pulse. An inherent characteristic of a Schmitt trigger circuit is that a different input threshold level exists for a positive and negative signal. Hysteresis is the difference between the input thresholds of the Schmitt trigger.

The hysteresis, or threshold window, of the Schmitt trigger provides immunity to small input signal variations that are not desired on the output of the Photologic® circuit. The larger the difference between the input thresholds the greater the immunity to noise or signal variations. The trade off is unfortunately speed or output response time.

Assemblies

The combination of Photologic® discrete components and the large selection of standard housings, mechanical configurations and apertures provides the designer with literally hundreds of options available to address their application utilizing standard products. OPTEK offers the designer a value added assembly by adding a wide variety of connectors to the standard assemblies. Contact an OPTEK sales office for price and delivery of value added assemblies.

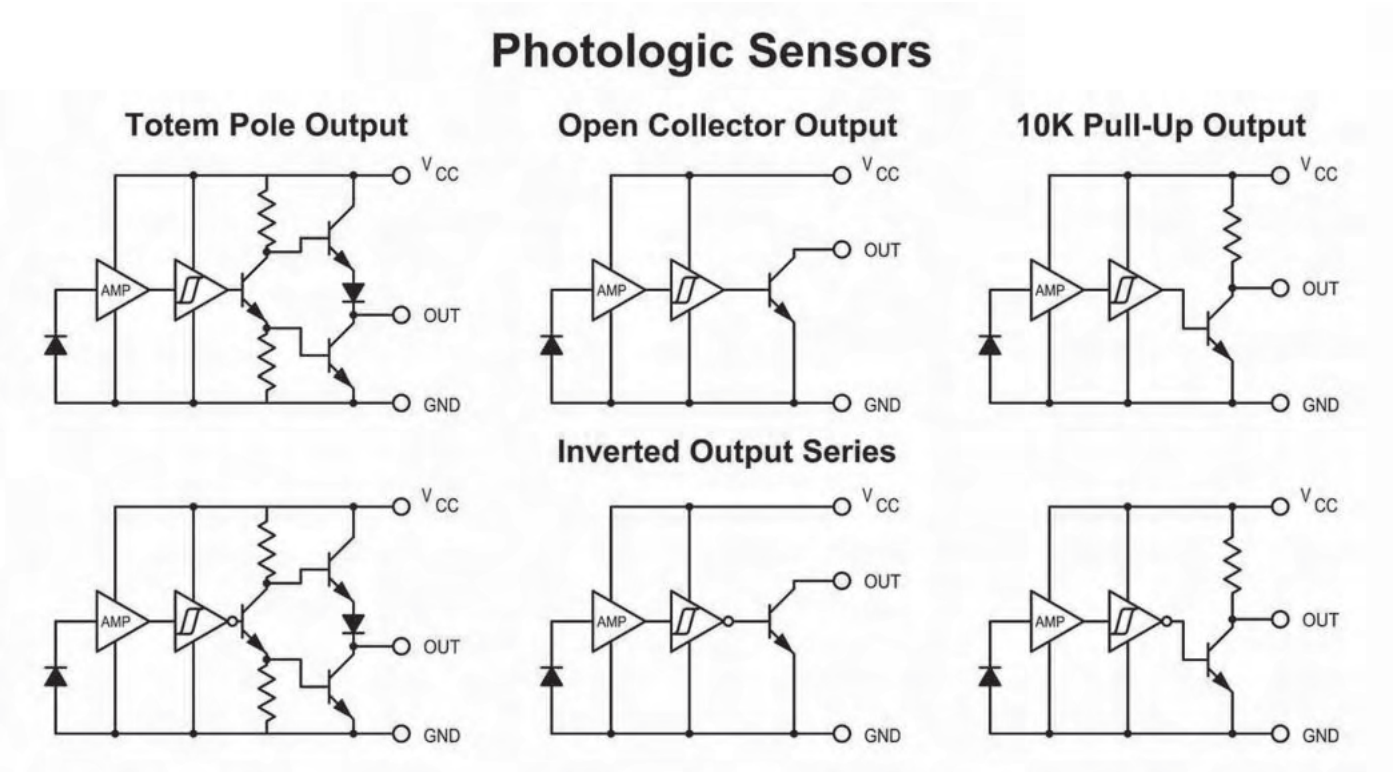

Fiber Optic Components and Modules

Power Conversion			
DBm	µW	DBm	µW
-30	1	0	1,000.0
-27	2	-1	794.3
-25.2	3	-2	631.0
-24	4	-3	501.2
-23	5	-4	398.1
-22.2	6	-5	316.2
-21.5	7	-6	251.2
-21	8	-7	199.5
-20.5	9	-8	158.5
-20	10	-9	125.9
-17	20	-10	100.0
-15.2	30	-11	79.4
-14	40	-12	63.1
-13	50	-13	50.1
-12.2	60	-14	39.8
-11.5	70	-15	31.6
-11	80	-16	25.1
-10.5	90	-17	20.0
-10	100	-18	15.8
-7	200	-19	12.6
-5.2	300	-20	10.0
-4	400	-21	7.9
-3	500	-22	6.3
-2.2	600	-23	5.0
-1.5	700	-24	4.0
-1	800	-25	3.2
-0.5	900	-26	2.5
0	1,000	-27	2.0
		-28	1.6
		-29	1.3
		-30	1.0

Fiber Optic Components and Modules

OPTEK Technology produces Standard and Custom devices for the fiber optic, multi-mode, market place. The devices are designed and manufactured to the highest quality and expected life is over 100,000 hours of constant operation. A variety of packaging is available to meet your needs.

OPTEK fiber optic components are optimized for use with multimode fiber optic cables at 850nm wavelength. The optical design provides good coupling with 50/125, 62.5/125, 100/140, and larger optical fibers. The mechanical design offers the user a choice between a hermetically sealed device and a less expensive plastic cap component. LEDs and PIN diodes are subjected to testing to eliminate infant mortality failures, and thus improve field reliability. Performance tests are accomplished with as near to actual use conditions as possible. Devices which are mounted in ST or OSA style connectors are easily mounted to printed circuit boards, panels or other connector schemes.

LEDs

The basic building block for multi-mode fiber optic communications is the LED. Rise and fall times are as fast as 3.5 nanoseconds and Optical Power as high as 89µW (-10.5 dBm). All LEDs are subject to 100% burn-in testing. Test conditions are: 96 hours at 100mA continuous current at ambient temperature (25°C).

VCSELs

Fiber optic communications is continually increasing in speed and power requirements. To meet market expectations, OPTEK provides high optical power Vertical Cavity Surface Emitting Lasers. These state of the art emitters and sensors are designed to meet the standard communication requirements with data rates in excess of 2.5 Gbps.

- 2.5 Gbps VCSELs (OPV3XX part numbers)

Connectorized Devices

In order to make it easy for the user to connect to a fiber oOptic device, OPTEK aligns them in ST, TOSA or ROSA connectors. Package configurations consist of the following:

- TOSA (Transmitter Optical Sub Assembly) & ROSA (Receiver Optical Sub Assembly)
- Sugar Cube (Fiber DIP)
- Metal ST
- Plastic ST
- Conductive Plastic ST
- Custom to meet your needs

Hall-effect (Magnetic)

OPTEK Technology produces temperature-compensated Hall-effect magnetic sensing devices. The Magnetologic® and Hallogic® Hall-effect Sensors are superior products that meet the demands of motion sensing in extremely harsh environments such as under-the-hood automotive and heavy industrial machinery applications, including robotics.

Hallogic® refers to the combination of a Hall element magnetic field sensor with highly refined integrated circuitry on a single, monolithic bipolar silicon chip. Incorporated on the Hallogic® sensor chip are:

- A Hall element
- A bandgap voltage regulator
- Threshold amplifier including a linear amplifier and Schmitt trigger
- An open-collector output transistor that can drive ten TTL loads

The Hall Element

The basic Hall element relies on a magnetic field in order to sense motion. The principle is based on the Hall-effect, discovered more than 100 years ago by the American physicist, Edwin Herbert Hall. The Hall-effect is the small electrical potential created when a stationary magnetic field is placed perpendicular to a current-carrying conductor.

Most available Hall elements hold current constant and measure voltage, which is then correlated with magnetic field strength. The superior performance of the OPTEK device is due in part to the fundamental design change which instead provides a constant bias voltage and measures the Hall current. This method proves more accurate for sensing magnetic field strengths when temperature varies. It also provides a better way to interface the Hall element with the complex integrated circuitry of the Hallogic® sensor.

The OPTEK element then is basically a block of semiconductor material with four contact points. Two contacts are used to supply a constant bias voltage to the element; the other two are used for the varying current output. If voltage is held constant across the device while a perpendicular magnetic field is applied, the Hall current can be sensed across the output connections. The Hall current is proportional to the strength of the applied magnetic field.

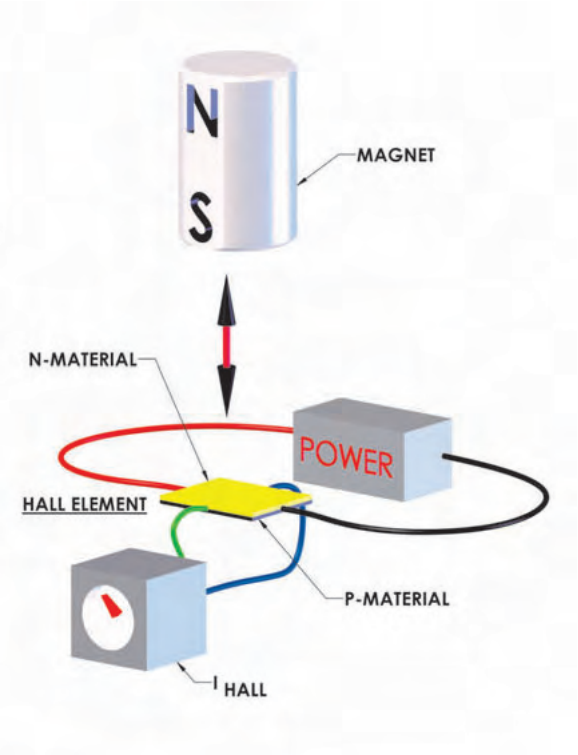

Unprecedented Temperature Stability

Temperature coefficients have been optimized to insure stable electrical characteristics over the temperature range of –55°C to +150°C. Other design aspects of the Hallogic® sensor that enable it to meet OPTEK's demanding temperature stability objectives are two important circuit areas on the chip, the bandgap regulator and the threshold amplifier.

1.Bandgap Voltage Regulator:

In addition to maintaining a constant output voltage level (no matter what changes occur in input voltage or output current), the OPTEK Hallogic® bandgap voltage regulator also serves as an extremely good temperature compensated voltage source to bias the Hall supply voltage ranging from 4.5 to 24 volts DC, with virtually no drift in magnetic sensitivity (i.e., in the magnetic trigger point).

1.Threshold Amplifier

The amplifier/detector circuit is a constant-gain type, designed with temperature-compensated trip points at the input to the voltage comparator. The Schmitt trigger output then drives an open-collector transistor with a 50 mA current sinking capability. This open-collector transistor enables the device output to drive up to ten TTL loads directly.

Hall-effect (Magnetic)

Low Power Comsumption

Another advantage for Hall-effect sensors is the low power consumption, which results from no bias current being required by the permanent magnet and the sensor drawing only 5 mA (typical) of supply current (I_{CC}).

Package Design

OPTEK uses a high density molded plastic to encapsulate the Hallogic® lead frame and chip. Both the density and the transfer molding process results in a dirt and moisture barrier effective enough to pass Military standard 883. The sensor passes "pressure cooker" and similar moisture and temperature testing procedures to ensure a reliability product.

In addition, the lead frame is designed with superior thermal characteristics for maximum reliability at the ten TTL load capability of the device.

The dimensional outline of the package and the precise placement of the Hall element is standard. This design allows for the superior, temperature compensated OPTEK device to be specified for instant replacement. A significant upgrade in performance can be achieved without costly redesign and retooling.

Because the Hallogic® Hall-effect Sensor is smaller than conventional emitter-detector pairs, it will more easily fit into areas with small size constraints.

Designed for the Toughest Environments

Hallogic® Hall-effect Sensors are virtually immune to environmental contaminants. They are rugged and suitable for use under severe service conditions. Even in the toughest environment, the Hallogic® sensor will exhibit excellent magnetic sensitivity to provide reliable, repetitive operations in close tolerance applications. These devices are excellent choices for DC motor, automotive applications, robotic and heavy machinery sensing applications, or for any application in a harsh environment where optoelectronic devices are unsuitable.

Custom Sensor Assemblies

OPTEK offers the customer the same custom assembly capability they have come to expect from the Optoelectronic division. Custom designed sensors with Hall-effect devices and magnets, long lead wires, special connectors, etc., are available. With OPTEK's complete plastic tooling and molding operations, Hall-effect sensors are available in a wide variety of hybrid packages.

Typical Applications

Appliances	Automotive	Watercraft	Business Machines	Hi-Reliability
DC Motors	Military Systems	Military Equipment	Instrumentation	Space
Electrical Motor Controls	Entertainment Products	Industrial Switching	Commercial Switching	Military Equipment
Machine Tools	Heavy Machinery	Power Supplies	Harsh Environment Sensing	Air Craft

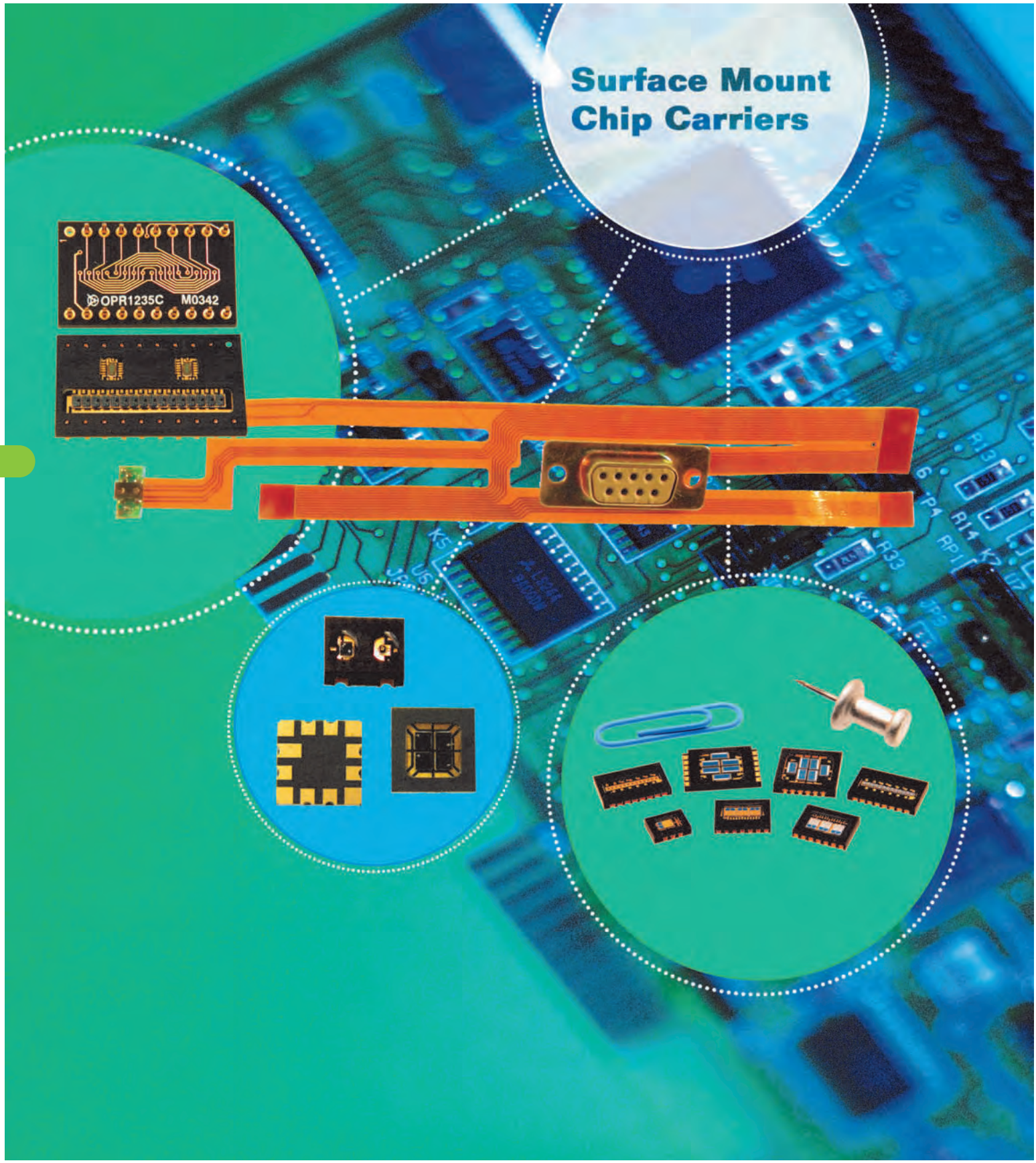
Surface Mount
Chip Carriers
OPR1235C M0342

Surface Mount Chip Carriers

Introduction to SMCC

Surface Mount Chip Carriers (SMCC) offer solutions to many applications that cannot be satisfied with standard or conventional optoelectronic components. These devices are used where the desired function cannot be accomplished with conventional through hole, leaded or individual surface mount components. SMCC devices allow multiple LEDs and sensors to be packaged together to create compact sensing solutions. Space savings can be as much as 80% as compared with discrete packaged components.

SMCC Construction

The polyimide chip carrier, an OPTEK standard packaging method, has four main parts: Substrate, Frame, Components and Encapsulation.

- The substrate is fabricated from high temperature copper-clad laminate. Standard PC Board processing provides the plated and non-plated holes, circuit patterns and chip mounting features. To make the substrate compatible with die attach and wire bonding techniques, the copper surface is plated with a nickel barrier and gold.
- Components used in SMCC designs can be any of OPTEK's standard LED or sensor products.
- The frame layer is made from the same polyimide laminate as the substrate and is used to protect the die and contain the encapsulation material. After the chip components are mounted and bonded, the frame is screen printed with a pattern of non-conductive epoxy, aligned with the matching substrate cells, and laminated to the substrate under elevated temperature and pressure.
- The encapsulant is a conformal coating which is applied to fill the component cavities. After curing the encapsulant, the array is sawn into individual product elements and is ready for final test and packaging.

The OPTEK standard chip carrier substrate and frame material thickness is 0.030" (0.76mm). Including the adhesive and metal layers, this two layer, laminated package has a nominal thickness of 0.063" (1.60mm).

Polyimide is an excellent substrate because of its strength, high processing temperature, and close match with the expansion coefficient of silicon devices. OPTEK uses a special opaque grade of 0.030" (0.76mm) polyamide which can effectively shield sensors from stray light.

SMCC Advantages

- SMCC devices offer unique LED and sensor configurations to suit a special set of application requirements.
- The standard materials and processes result in packages that accommodate extended temperatures beyond the range of many commercial components.
- Reduced part count, automated processes, and OPTEK's commitment to quality results in robust, defect free parts.
- Chip carriers withstand the challenges of low cost automated handling, placement and reflow soldering.
- In comparison to a custom IC solution, the development cost of a typical SMCC circuit is far less and modifications are quicker and easier.
- Array processing in SMCC fabrication minimizes cost and optimizes quality.

High-Reliability

High-reliability requirements demand that products be able to function under abnormally severe levels of mechanical, environmental, and electrical stress. OPTEK has met this challenge with product designs and process control techniques that ensure high reliability and, thus, long life.

Capability

OPTEK maintains a well equipped high-reliability lab for conducting electrical, mechanical, and environmental test. OPTEK's Calibration system complies with the requirements of ANSI/NCSL Z 540-1. High reliability hall effect, and transistor devices from OPTEK are currently in use in a wide variety of space and defense programs.

Certifications

OPTEK is fully certified for commercial off the shelf (COTS) products as well as BS EN ISO 9001:2000 and ISO/TS16949:2002. Electrical, environmental and mechanical testing is based on MIL-PRF-19500, MIL-STD-883 and ESA 5000 test method and procedures.

Generic Screening and QCI Testing

Screening and Quality Conformance Testing can be provided on almost any hermetic product that OPTEK builds or quotes. OPTEK generic processing and QCI testing is explained in the "Generic OPTEK Processing" table. Specific details such as burn-in conditions or delta measurements performed can be obtained from the devices Data sheet.

One of the key advantages of purchasing part types to a generic high-reliability screening program is that Group testing lot charges may be avoided, since OPTEK frequently spreads these costs over large groups of orders. Customers requiring Group testing on their individual orders can also be accommodated, but these orders have to be run under a special part number for control purposes.

High-Reliability Couplers

OPTEK offers high-reliability, optically coupled isolators to MIL-PRF-19500, and components processed to OPTEK's own military screening program.

High-Reliability Sensors and Emitters

A large selection of discrete emitter and sensor are offered that are processed to OPTEK's own military screening program patterned after MIL-PRF-19500 and MIL-STD-883.These devices are identified by "TX","TXV" , "B" and "S" suffixes. Although not military qualified devices, they receive 100% screening and are fully processed to the appropriate levels.

For discrete sensors, the 100% screening includes both a 48-hour, high temperature reverse bias at T_A=125 °C, and a 160 or 240-hour power burn-in at ambient temperature (T_A=25 °C). For emitters, the 100% screening includes a burn-in in the forward direction for 96, 160 or 240 hours depending on the series.

High-Reliability Hall Effect Sensor

OPTEK offers unipolar and bipolar (latching) hall effect magnetic sensing product in hermetic ceramic packages. These sensors are processed to OPTEK's screening procedure patterned after MIL–STD-883 Class B or Class S quality levels. These products operate from a 4.5 to 24 volt power supply and have an open collector logic level output capable of providing 25mA of sink current.

High- Reliability Transistor Products

A line of standard transistor product in hermetic surface mount packages are offered to support the defense, space and high reliability industries. Single, dual, and quad package transistor chips are designed to conserve board space in high-density applications.

High-Reliability

High-Reliability Assemblies

OPTEK manufactures a wide variety of standard (commercial-off-the-shelf) and custom (built-to-print) assemblies. Most assemblies can be classified into one of two groups: slotted optical switches or reflective Assemblies.

Slotted optical switches are designed to provide non-contact sensing of linear or rotary motion.

Reflective assemblies are designed to provide non-contact sensing of reflective surfaces, or a change in surface reflectivity of an object.

High reliability assemblies are generally made with plastic housing and hermetically sealed discrete sensors and emitters. Before being placed in the housing the discrete components are subjected to high-reliability processing. Frequently, this processing on the discrete device is similar to what is specified on the individual high-reliability sensor and emitter data sheets.

Customer Specific Designs

Sometimes, it is necessary to have special electrical selections, screening requirements, or package configuration that is different from the standard offerings shown in the data sheets. OPTEK's custom capability is extensive. Assembly and test areas were designed with a great deal of flexibility, which allows the product to be built and tested on an order-to-order basis. The Quality Control Department's Environmental testing areas are set up similarly, allowing many orders to be handled, each requiring different tests, screens, and conditions.

Group A:	Consists of electrical tests and external visual done on a sample basis by Q.C. Prior to submittal to Q.C for Group A inspection, all devices in the lot are 100% electrically tested in manufacturing.
Group B:	Consists of tests conducted on a sample basis to verify production lot conformance to package integrity, environmental extremes, and long-term reliability. The Group B samples are normally selected from the lots that are manufactured within a six-week time period, based on the date of final package sealing
Group C:	Is further environmental testing similar to Group B, but sample testing is performed on a periodic basis (typically at six month intervals.)
High Temperature Reverse Bias (HTRB):	Devices are reverse biased in a non-conduction mode at high temperature for a period of time in this test. This test is used primarily to screen out those devices with inferior semiconductor die characteristics, such as poor voltage breakdown or leakage current. Ambient temperature is usually specified somewhere between +100°C to +175°C.
MIL-PRF-19500:	Military document that establishes the general requirements for semiconductor devices for a particular series (e.g., 4N22A military series is spelled out in MIL-PRF-19500/486.)
MIL-STD-750:	Military specification that depicts electrical, mechanical, and environmental test procedures and methods for discrete semiconductors.
MIL-STD-883:	Military specification that establishes uniform methods, controls and procedures for testing microelectronic devices.
Level TX:	All TX units receive process conditioning prior to quality conformance inspection. *(See Fig 1)*
Level TXV:	All TXV units receive process conditioning prior to quality conformance inspection as well as 100% visual inspection. *(See Fig 2)*
Level B:	All B units receive process conditioning prior to quality conformance inspection. *(See Fig 3)*
Level S:	An ultra-high-reliability device with very strict quality assurance and manufacturing controls imposed. Level S devices are designed with space applications in mind with the highest product assurance reliability test. *(See Fig 4)*
Level ESA/SCC/5000:	European Space Agency specification that defines the general requirements for the qualification approval, procurement, including lot acceptance testing and delivery of discrete semiconductor components for space applications. *(See Fig 5)*

High-Reliability

Operating Life

Also known as burn-in, life testing, and power age. Operating the device in a conduction mode (turn on) to simulate what the part will encounter in actual service. As a very common test in process conditioning, operating life is used to screen out those parts with potential short service life.

Quality Conformance Inspection (QCI):

Those tests performed to verify a given lot's conformance to a military document or a customer's specification. Quality conformance inspection consists of Group A, but may include Group B or C, depending on the requirements for the formulation of these groups of tests.

Qualification (Qual):

All testing performed to qualify a new product, traditionally consists of Groups A, B and C. Individual test or requirements are sometimes added or deleted for qualification.

Process Conditioning:

Test (sometimes referred to as screens) that are performed on 100% of the devices in the lot to assure long-term reliability characteristics.

Simplified Product Flows

TX	TXV	B Per 883	S Per 883	ESA
Commercial Product	100%: Pre-Cap, Visual	Commercial Product	SEM—Inspection 100%: Pre-Cap, Visual	100%: Pre-Cap, Visual
High Temperature Storage	High Temperature Storage	High Temperature Storage	100%: Non-Destruct Bond Pull	High Temperature Storage
Temperature Cycle	Temperature Cycle	Temperature Cycle	High Temperature Storage	Temperature Cycle
Constant Acceleration	Constant Acceleration	Constant Acceleration	Temperature Cycle	Constant Acceleration
Hermetic Seal Test	Hermetic Seal Test	Hermetic Seal Test	Constant Acceleration	Hermetic Seal Test
HTRB	HTRB	HTRB	Hermetic Seal Test	HTRB
Power Burn-In	Power Burn-In	Power Burn-In	HTRB	Power Burn-In
QCI LAT A B C	QCI LAT A B C	QCI LAT A B C	Power Burn-In X-Ray QCI LAT A B D	QCI LAT LAT 3 LAT 2 LAT 1
Ship	Ship	Ship	Ship	Ship
(Fig. 1)	*(Fig. 2)*	*(Fig. 3)*	*(Fig. 4)*	*(Fig. 5)*

High-Reliability

GENERIC OPTEK PROCESSING

Screening	TX & TXV per MIL-PRF-19500	S-Level per MIL-PRF-19500	B-Level per M5004 of MIL-STD-883[2]	S-Level per M5004 of MIL-STD-883[2]	B-Level per ESA 5000 [7]
Operation Description	MIL-STD-750 Method	MIL-STD-750 Method	MIL-STD-883 Method	MIL-STD-883 Method	MIL-STD-750 Method
Bond Pull, Ball Shear, Die Shear Test: In process monitors in the form of SPC. (Ball shear applies to gold ball bonded devices only)	(Per MIL-PRF-19500 App D for S Level plus ball shear)				
Non-Destruct Bond Pull	N/A	N/A	N/A	2023	N/A
Internal Precap Inspection Performed on all OPTEK Hi-Rel Products	2072[3]	2072	2010	2010	2072
RGA Monitors Periodic monitors. Not performed on every lot.	1018				
100% Post Seal Electrical Test Selected DC tests only.	Per OPTEK published data sheet				
Permanent Serialization	No	Yes	No	Yes	Yes
High Temperature Storage	N/A	Optional			48 hrs. Max T_J
Temperature Cycle[4] -55°C to +175°C	1051 Condition C, 20 Cycles	1051 Condition C, 20 Cycles			
-65°C to +150°C			1010 Condition C, 10 Cycles	1010 Condition C, 10 Cycles	
-65°C to +125°C					(MIL-STD-202) M 102, 20 Cycles
Acceleration	2006, 20 KG, Y1	2006, 20 KG, Y1	2001, 30 KG, Y1	2001, 30 KG, Y1	2006, 20 KG, Y1
Visual Inspection/Dimension Check	No	No	For Catastrophic visual defects	For Catastrophic visual defects	All dimensions on 5 pieces
Particle Impact Noise Detection	N/A	2052 Cond. A	N/A	2020 Cond. A	2052 Cond. A
Fine Leak Test[5]	1071 Cond. H $5X10^{-8}$	1071 Cond. H $5X10^{-8}$	1014 Cond. A_1 $5X10^{-8}$	1014 Cond. A_1 $5X10^{-8}$	1071 Cond. H $5X10^{-8}$
Gross Leak Test[5]	1071 Cond. C	1071 Cond. C	1014 Cond. C	1014 Cond. C	1071 Cond. C
Thermal Response Test[6]	3101 or 3131	3101 or 3131	N/A	N/A	N/A
Pre HTRB Electrical Measurements Recorded parameters for delta data	N/A	N/A	N/A	N/A	Yes
HTRB	1038 or 1039 Cond. A	1038 or 1039 Cond. A	N/A	N/A	1038 or 1039 Cond. A
Post HTRB/Pre Burn-In Testing Record parameters for delta calculations	Yes				

High-Reliability

GENERIC OPTEK PROCESSING (Continued)

Screening	TX & TXV per MIL-PRF-19500	S-Level per MIL-PRF-19500	B-Level per M5004 of MIL-STD-883[2]	S-Level per M5004 of MIL-STD-883[2]	B-Level per ESA 5000 [7]
Operation Description	MIL-STD-750 Method	MIL-STD-750 Method	MIL-STD-883 Method	MIL-STD-883 Method	MIL-STD-750 Method
Burn-In	1038 or 1039 Cond. B Diodes 96 hrs., Transistors 160 hrs.	1038 or 1039 Cond. B 240 hrs.	1015, 160 hrs	1015, 240 hrs	1038 or 1039 Cond. B Diodes 96 hrs., Transistors 160 hrs.
Post Burn-In Testing Read & Record, and Delta Calculations	Yes				
PDA Limit	10%	5%	5%	5%	5%
ALL other specified electrical test Perform 100% Read & Record	 No No	 Yes No	 Yes No	 Yes No	 Yes Yes
Calculate PDA on all tests	No	No	No	No	Yes
X-Ray	No	2076	No	2012	2076
External Visual	No	2071	2009	2009	2071
Produce a Failure Accountability Sheet	No	Yes	No	No	Yes
Lot Acceptance Testing	MIL-PRF-19500 See Table provided for TX and TXV Group A, B, C testing	MIL-PRF-19500 See Table provided for S level Group A, B, C testing	5005 See Table provided for Group A, B, C testing	5005 See Table provided for Group A, B, D testing	ESA 5000 See Table provided for Group level 1, 2 and 3 testing

Notes:
1. Revision K
2. OPTEK is a compliant COTS supplier per MIL-STD 750 and MIL-PRF-19500. OPTEK does not claim to be a supplier as defined in MIL-STD-883D, paragraph 1.2.1. MIL-STD-883 requirements are based on Revision D, Notice 2.
3. TX products receives only 30X inspection. TXV product receives those magnifications called out in Method 2072.
4. This temperature or the maximum device rating (whichever is less) will be used.
5. Hermeticity testing will be performed at this point or after Burn-In electrical test.
6. Performed routinely on select transistor and diodes only but available on any bi-polar or PN junction device.
7. European Space Agency (ESA) 5000 Revision D.
8. The sample sizes given are for lot sizes of 2,500 pieces or less, the definition for “small lot” size per MIL-PRF-19500.

High-Reliability

LOT ACCEPTANCE TESTING — MIL-PRF-19500

Per MIL-PRF-19500, lot acceptance testing is performed by sampling each date code lot following all 100% screening operations and performing a series of tests. Tests are divided into groups. Group A for electrical, Group B & C for Environmental and life test. Group A& B is performed on every lot while Group C is performed on one lot for each package and chip combination every 12 months. Standard OPTEK products that have a TX or TXV suffix typically follow the generic MIL-PRF-10500 lot acceptance test outline and rules. Products with a B or S suffix are usually MIL-STD-883, M5005 controlled. Special circumstances may warrant a deviation on some products.

The following tables reflect MIL-PRF-19500 Revision M as they affect OPTEK standard products. OPTEK attempts to maintain standard TX, TXV, S, B & ESA specifications up to the most current revision.

LOT ACCEPTANCE TESTING — Group A

Per MIL-PRF-19500 and MIL-STD-883 Method 5005

Subgroup	MIL-PRF-19500 TX, TXV, & S Level			MIL-STD-883[2] Method 5005
	Operation	Sample Quantity [8]		B & S Level samples size for All Sub-groups = 116/0
		TX & TXV	S-Level	
Subgroup 1	Visual & Mechanical	45	15	25 ° C DC Test
Subgroup 2	25°C DC Test	45	116	High Temp. DC Test
Subgroup 3	High & Low Temp Test	45	116	Low Temp. DC Test
Subgroup 4	25°C Dynamic Test	45	116	25 ° C Dynamic Test
Subgroup 5	Safe Operating Area	45	45	High Temp. Dynamic Test
Subgroup 6	Surge Current	22	45	Low Temp. Dynamic Test
Subgroup 7	Misc.	22	45	25°C Functional Test
Subgroup 8A	N/A	0	0	High Temp. Functional Test
Subgroup 8B	N/A	0	0	Low Temp. Functional Test
Subgroup 9	N/A	0	0	25°C Switching Time Test
Subgroup 10	N/A	0	0	High Temp Switching Time Test
Subgroup 11	N/A	0	0	Low Temp Switching Time Test

High-Reliability

LOT ACCEPTANCE TESTING — Group B

Subgroup	MIL-PRF-19500		MIL-STD-883 Method 5005	
	TX & TXV	S-Level	B-Level	S-Level
Subgroup 1	Solderability Resistance to Solvents	Physical Dimensions	N/A	Physical Dimensions Internal Water Vapor
Subgroup 2	Temp Cycling, Surge, Hermetic Seal, Electrical End Points	Solderability Resistance to Solvents	Resistance to Solvents	Resistance to Solvents, Internal Visual, Bond Strength, Die Shear
Subgroup 3	Steady State Operation Life (340 hrs) Electrical End Points, Bond Strength	Temp cycling, Thermal Shock, Surge (when applicable), Hermetic Seal, Electrical End Points, Bond Strength, SEM, Die Shear	Solderability	Solderability
Subgroup 4	De-Cap Internal Visual	Intermittent Operating Life Test, Electrical End Points	N/A	Lead Integrity, Hermeticity, Lid Torque
Subgroup 5	Thermal Resistance	Accelerated Steady State, Operating Life Test, Electrical End Points, Bond Strength	Bond Strength	Electrical R&R, Steady State Life Test, Electrical End Points
Subgroup 6	High Temp. Storage (340 hrs)	Thermal Resistance	N/A	Electrical R&R, Temp. Cycling, Constant Acceleration, Hermeticity, Electrical End Points

LOT ACCEPTANCE TESTING — Group C

Subgroup	MIL-PRF-19500	MIL-STD-883 Method 5005	
	All Levels	B-Level	S-Level
Subgroup 1	Physical Dimensions (Not required for S-Level)	Electrical Test, 1,000 hr Life Test, Electrical Test	N/A
Subgroup 2	Thermal Shock, Terminal Strength, Hermetic Seal, Moisture Resistance, Electrical End Points	N/A	N/A
Subgroup 3	Shock, Vibration, Variable Frequency, Constant Acceleration, Electrical End Points	N/A	N/A
Subgroup 4	Salt Atmosphere	N/A	N/A
Subgroup 5	N/A	N/A	N/A
Subgroup 6	Electrical Test, Operational Life, Electrical Test	N/A	N/A

High-Reliability

LOT ACCEPTANCE TESTING — Group D

Subgroup	MIL-STD-883 Method 5005 only (All quality levels)
Subgroup 1	Physical Dimensions
Subgroup 2	Lead Integrity, Seal Test
Subgroup 3	Thermal Shock, Temperature Cycle, Moisture Resistance, Visual Inspect, Seal Test, Electrical End Points
Subgroup 4	Mechanical Shock, Variable Frequency Vibration, Constant Acceleration, Seal Test, Visual Inspect, Electrical End Points
Subgroup 5	Salt Atmosphere, Visual Inspection, Seal Test
Subgroup 6	Internal Water Vapor Content (RGA)
Subgroup 7	Adhesion of Lead Finish
Subgroup 8	Lid Torque (For Glass Only)

OPTEK supports process flow and lot acceptance test requirements of European Space Agency (ESA) documents with some limitations. OPTEK high reliability manufacturing procedures reflect United States (US) military documents. Therefore, some referenced ESA documents must default to similar US documents. Test limits, conditions, sequence and sample size specified in the ESA documents are maintained. A document cross reference list is provided in the following table.

ESA Specification	Description	Substitute Specification
20400	Internal Visual Inspection	MIL-STD-750 Method 2072
20500	External Visual Inspection	MIL-STD-750 Method 2071
20900	Radiographic Inspection	MIL-STD-750 Method 2076
24800	Resistance to Solvents	MIL-STD-750 Method 1022
23500	Lead Materials and Finish	MIL-PRF-19500
20100	Qualification Requirements	MIL-PRF-19500
20600	Preservation and Packaging	MIL-PRF-19500
21300	Terms and Definitions	MIL-PRF-19500
22800	Non-Conformance Control	MIL-PRF-19500
21500	Calibration System	MIL-PRF-19500

High-Reliability

Lot Acceptance Test for ESA Devices

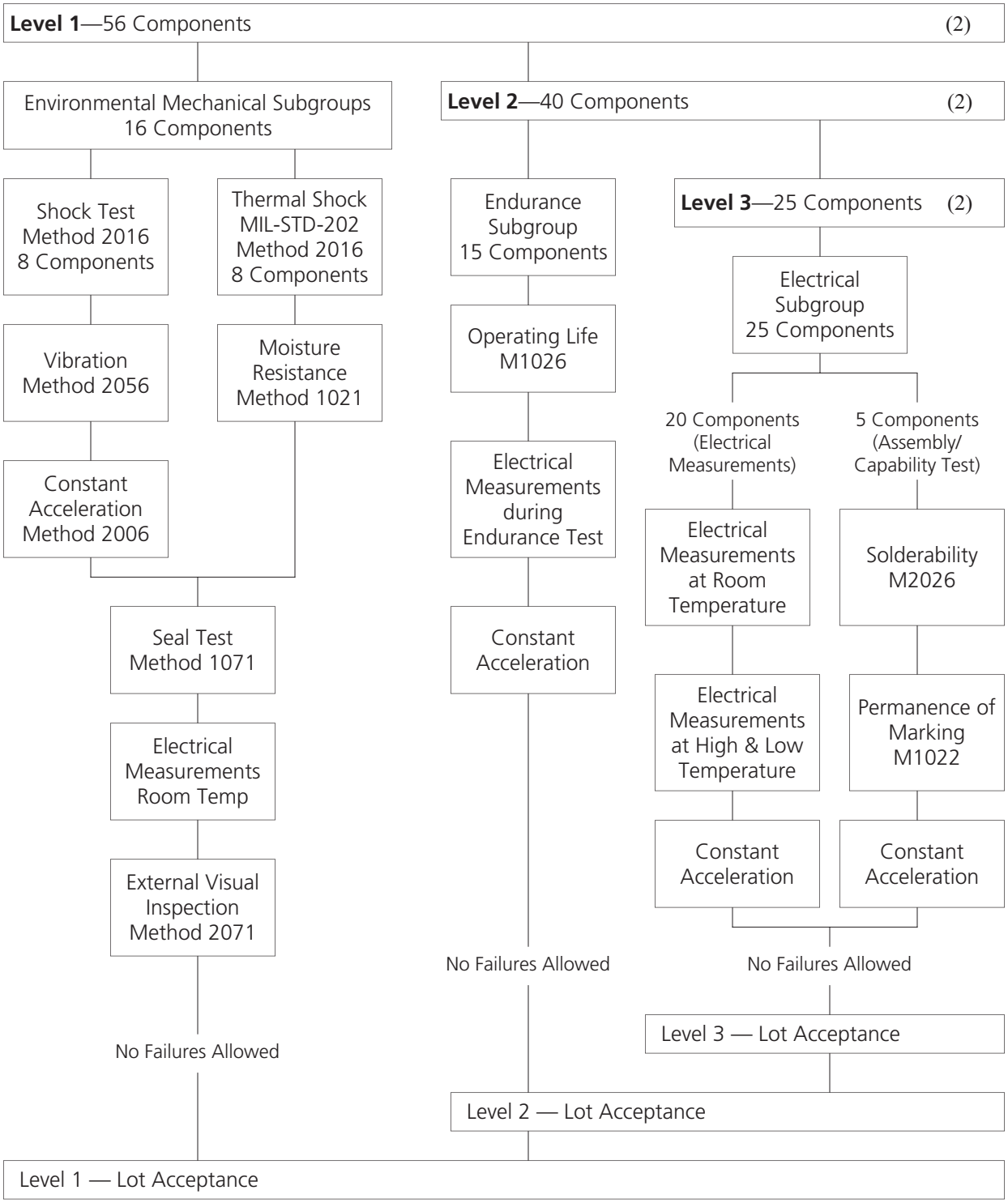

Note: Test methods referenced are from MIL-STD-750 unless otherwise specified. Diagram reflects ESA5000 Rev. D

Device Specific Information

Both Focused and Non-focused switches have been designed for identification of an object. The focused switch is used for short distances where longer distances are expected not to be seen by the device or for very long distances. Focused switches work best when looking for a shiny object. Non-focused switches are designed for objects that are close to the device with the object having a matte finish.

See pages 26 through 29.

Plastic devices are designed for dry commercial and industrial environments. In these conditions, the expected life of the device is over 11 years of continual operation.

See pages 13 through 21

Hermetic and ceramic devices are designed for the most harsh environments. Most can be processed for Hi-Reliability testing conditions including TX, TXV, B, C & ESA. Except at temperature extremes, the typical life expectancy is over 11 years of continual operation.

See pages 4 through 10

Encoding and object sensing can easily be accomplished utilizing slotted or flag switches. Slotted switches vary in slot width from 0.080″ (2mm) to 1.26″ (32 mm) and slot depth from 0.22″ (5.6mm) to 1.38″ (35 mm). The mounting features for these devices vary from 1 to 2 mounting tabs depending on the application. Most options are available for direct PCBoard mounting as well as extended wire connections for remote mounting requirements. A variety of Flag switches are available to replace mechanical switches thus enhancing the reliability.

See pages 30 through 52.

Surface Mount devices and Surface Mount Chip Carriers are critical where size is optimum.

See pages 10 through 12

Couplers and Isolators are designed for voltages up to 50 KV while maintaining excellent coupling rations between the emitter and sensor. Typical outputs are Open-Collector Transistors as well as a variety of Photologic® configurations.The expected life of the device is over 11 years of continual operation.

See Pages 25 and 26.

Hall-effect devices are essential for harsh environment applications.

See pages 12 through 13

Fiber Optic devices are designed for data communication requirements. Components, and Sub-Assemblies are available to meet data rates from DC to 2.5 Gbps. The expected life of the device is over 11 years of continual operation.

See pages 4 through 6 and 21 through 25.

Part Type Guide

	LED		Matched Optical Pairs
	VCSEL		LED & Sensor Arrays
	Photodiode		Reflective Switches
	Phototransistor & Photodarlington		Slotted Switches
	Photologic		Integrated Receivers
	Couplers & Isolators		Transceivers
	Hall-effect		Other

Package Type Guide

Description	Page #
Components	
Ceramic Leadless (Surface Mount)	9-10
End Looking	20
Surface Mount Chip Carrier	10-12
Pill Pack	8
Sidelooker—0.060" Base	14-15
Sidelooker—0.100" Base	16-17
T-1	17-18
T-1 3/4	19-20
TO-18 Plastic	19
TO-46 Bead Window	5
TO-46 Flat Window	6-7
TO-46 Lensed	4-5
TO-46 Transistor	7
TO-5	5
TO-78	7
Hall-effect	
Side Sensing—Ceramic	12
TO-92 Side Sensing—Plastic	13
Slotted Switch "T" Package—Hall	13
Miscellaneous	
Isolators & Couplers	25-26

Description	Page #
Fiber Optic	
Connector ST—Conductive Plastic	22
Connector ST—Cube	24
Connector ST—Metal	22-23
Component—Plastic Optical Fiber	21
Component TO—18 Plastic Cap	21
Component TO-18 Metal Can	6
Reflective Switches	
Reflective Arrow	27
Reflective Circle, Cube & Object	26
Reflective Side Looking	28
Slotted Switches	
Slotted "L" Package	29-32
Slotted "N" Package	32-37
Slotted "P" Package	37-41
Slotted "T" Packages	41-46
Other	46-49
Flag Switches	49-50
Miscellaneous	
Panel PCBoard Mount—Component Pairs	50

TO-46 Dome Lens

Package TO-18/46 Dome Lens

Part Number	Sensor	Light Current $I_{C(ON)}$ (mA) Min / Max	V_{CE} Typ/Max	Input Power E_E (mW/cm^2)	Viewing Angle (Degrees)	Lead Length	Package #
OP800A	Transistor	3.60 / NA	5	0.5	25	0.50"	12
OP800B		1.80 / 5.40					
OP800C		0.90 / 3.60					
OP800D		0.45 / NA					
OP800SL	Transistor	0.50 / NA	5	5.0	25	0.50"	12
OP801SL		0.50 / 3.00					
OP802SL		2.00 / 5.00					
OP803SL		4.00 / 8.00					
OP803TX							
OP803TXV							
OP804SL		7.00 / 22.00					
OP804TX							
OP804TXV							
OP805SL		15.00 / NA					
OP805TX							
OP805TXV							
OP830SL	Darlington	15.00 / NA	5	0.25	25	0.50"	12

Part Number	Photologic®	Input Power E_E (µW/cm^2) Min / Max	V_{CC} (V) Min / Max	I_{OH} / I_{OL}	Lead Length	Package #
OPL800	Totem-Pole	50 / 600	4.5 / 16.0	0.10 / 12.8	0.50"	12
OPL800-OC	Open-Collector					
OPL801	Inv-Totem-Pole					
OPL801-OC	Inv-Open-Collector					
OPL810	Totem-Pole	5 / 100	4.5 / 16.0	0.10 / 16.0	0.50"	12
OPL810-OC	Open-Collector					
OPL811	Inv-Totem-Pole					
OPL811-OC	Inv-Open-Collector					
OPL812	Totem-Pole					
OPL812-OC	Open-Collector					
OPL813	Inv-Totem-Pole					
OPL813-OC	Inv-Open-Collector					
OPL820	10K Pull-Up	2 / 35				
OPL820-OC	Open Collector					
OPL821	Inv. 10K Pull-Up					
OPL821-OC	Inv. Open Collector					

TO-46 Dome Lens, Bead Lens, TO-5 Dome Lens, Flat Lens

Package TO-46 Dome Lens

Part Number	LED Peak Wavelength	Output Power (mW/cm^2) Min / Max	I_F (mA) Typ / Max	Total Beam Angle (Degrees)	Lead Length	Package #
OP130	935 nm	1.0 / NA	50 / 100	18	0.50"	3
OP131		3.0 / NA				
OP132		4.0 / NA				
OP133		5.0 / NA				
OP231	890 nm	1.5 / NA	50 / 100	18	0.50"	3
OP232		2.0 / 6.0				
OP233		3.0 / NA				
OP234	890 nm	5.0 / NA	50 / 100	18	0.50"	3
OP235	890 nm	6.0 / NA	50 / 100	18	0.50"	3
OP235TX		1.5 / NA				
OP235TXV						
OP236TX	890 nm	3.5 / NA	50 / 100	18	0.50"	3
OP236TXV						

Part Number	Sensor	Light Current $I_{C(ON)}$ (µA) Min	V_R Typ / Max	Input Power E_E (mW/cm^2)	Viewing Angle (Degrees)	Lead Length	Package #
OP910	Photodiode	10.0	20 / 50	0.5	24	0.50"	3

Package TO-46 Bead Lens

Part Number	VCSEL Peak Wavelength	Data Rate Gbps	Total Output Power (mW) Min / Max	I_F (mA) Typ / Max	Rise / Fall Time (ps)	Lead Length	Package #
OPV314*	850 nm	2.5	0.8 / NA	7 / 20	100	0.50"	8
OPV314Y*							
OPV315*			0.5 / NA				
OPV315Y*							

Package TO-5

Part Number	Sensor	Light Current $I_{C(ON)}$ (µA) Min/Max	V_R Typ / Min	Input Power E_E (mW/cm^2)	Viewing Angle (Degrees)	Lead Length	Package #
OP913SL	Photodiode	120.0	5 / 32	2.5	20	0.50"	10
OP913WSL		40.0			80		

Note : * identifies products that are class 1M Laser Safety—See Application Bulletin 221.

TO-46 Flat Window, Short & Tall

Package TO-46 Flat Window

Part Number	VCSEL Peak Wavelength	Total Output Power (mW) Min / Max	Forward Current I_F(mA) Typ / Max	Total Beam Angle (Degrees)	Rise / Fall Time (ps)	Lead Length	Package #
OPV300*	850 nm	1.0 / NA	7.0 / 20	24	100	0.50"	6
OPV310*							

Part Number	LED Peak Wavelength	Output Power (mW) Min/Max	I_F (mA) Typ / Max	Rise / Fall Time (ns)	Fiber Size (µm)	Lead Length	Package #
OPF320A	850 nm	15.0	50 / 100	8.0 / 10.0	50/125	0.50"	5
OPF320B		10.0					
OPF320C		5.0					
OPF340A		20.0	50 / 100	6.0 / 6.0	50/125	0.50"	5
OPF340B		15.0					
OPF340C		10.0					
OPF340D		5.0					
OPF345A		20.0	50 / 100	4.5 / 4.5	50/125	0.50"	5
OPF345B		15.0					
OPF345C		10.0					
OPF345D		5.0					

Part Number	Fiber Optic Sensor	Responsivity (mA / mW) Typical	Rise Time (ns)	Reverse Voltage Typ / Max	Lead Length	Package #
OPF420	Photodiode	0.45	6.0	5.0 / 100	0.50"	5
OPF430			1.0			

Part Number	Data Rate	880 nm Receiver Type	Input Sensitivity (dbm)/(µW)	Output Type	Fiber Size (µm)	Lead Length	Package #
OPF505	200Kbps Receiver	DC Coupled Schmitt	-27 / 2.0	TTL/LSTTL	100/140	.050"	5
OPF515				Inverted TTL/LSTTL			

Integrated Receiver Part Number	Data Rate	Integrated Receiver Type	Responsivity (µV/µW) Min / Max	Peak Input Power (dbm) Max	Rise & Fall Time (ps)	Fiber Size (µm)	Package #
OPV600	2.5 Gbps	PIN/TIA Receiver	700 / 1,000	+3	250	62.5/125	5

Package TO-46 Flat Window

Part Number	LED Peak Wavelength	Output Power (mW/cm^2) Min / Max	I_F (mA) Typ / Max	Total Beam Angle (Degrees)	Lead Length	Package #
OP130W	935 nm	1.0 / NA	20 / 100	50	0.50"	4
OP131W		3.0 / NA				
OP132W		4.0 / NA				
OP133W		5.0 / NA				
OP231W	890 nm	1.5 / NA	20 / 100	50	0.50"	4
OP232W		3.5 / 7.0				
OP233W		5.0 / NA				
OP230WPS	890 nm	0.5 / NA	20 / 100	50	0.50"	4
OP234W		5.0 / NA				
OP235W		6.0 / NA				

Note : * identifies products that are class 1M Laser Safety—See Application Bulletin 221.

TO-46 Flat Window, TO-72 & TO-78

Package TO-46 Flat Window

Part Number	Sensor	Light Current $I_{C(ON)}$ (µA) Min	V_R Typ / Max	Input Power E_E (mW/cm^2)	Viewing Angle (Degrees)	Lead Length	Package #
OP910W	Photodiode	1.7	20 / 60	0.5	80.00	0.50"	9

Part Number	Sensor	Light Current $I_{C(ON)}$ (mA) Min / Max	V_{CE} Typ / Max	Input Power E_E (mW / cm^2)	Viewing Angle (Degrees)	Lead Length	Package #
OP800WSL	Transistor	0.30 / NA	5 / 30	5	75	0.5 0"	13
OP801WSL		0.50 / 3.00					
OP802WSL		2.5 / NA					
OP830WSL	Darlington	4.00 / NA	5 / 15	0.50			

Opto-Isolator Package TO-72

Part Number	LED Peak Wavelength	Sensor	Isolation Voltage (,000)	CTR Min / Max	I_F (mA) Typ / Max	V_{CE} (V) Typ / Max	Lead Length	Package #
3C91C	935 nm	Transistor	1	0.32 / 1.90	10 / 50	10 / 50	0.50"	7
3C91CTX								
3C91CTXV								
3C92C	935 nm	Transistor	1	0.3 / 2.0	10 / 50	10 / 50	0.50"	7
3C92CTX								
3C92CTXV								
3N243	880 nm	Transistor	1	0.15 / NA	3 / 40	10 / 30	0.50”	7
3N243TX-TXV								
3N244				0.8 / NA				
3N244TX–TXV								
3N245				0.6 / NA				
3N245TX-TXV								
3N261	880 nm	Transistor	1	0.5 / NA	1 / 40	5 / 30	0.50"	7
3N261TX-TXV								
3N262				1.0 / 5.0				
3N262TX-TXV								
3N263				2.0 / 10.0				
3N263TX-TXV								

Opto-Isolator Package TO-78

Opto Isolator Part Number	LED Peak Wavelength	Sensor	Isolation Voltage (,000)	CTR % Min / Max	I_F (mA) Typ / Max	V_{CC} (V) Typ / Max	Rise / Fall Times Max (µs)	Package #
4N22A	935 nm	Transistor	1	25 / NA	10 / 40	5 / 35	15 / 15	11
4N22ATX								
4N22ATXV								
4N23A	935 nm	Transistor	1	20 / NA	10 / 40	5 / 35	15 / 15	11
4N23ATX								
4N23ATXV								
4N24A	935 nm	Transistor	1	40 / NA	10 / 40	5 / 35	20 / 20	11
4N24ATX								
4N24ATXV								
4N47	935 nm	Transistor	1	50 / NA	1 / 40	5 / 40	20 / 20	11
4N47TX								
4N47TXV								
4N48	935 nm	Transistor	1	100 / 500	1 / 40	5 / 40	20 / 20	11
4N48TX								
4N48TXV								
4N49	935 nm	Transistor	1	200 / 1,000	1 / 40	5 / 40	20 / 20	11
4N49TX								
4N49TXV								

Pill Pack Low & Dome Lens

Package Pill Dome Lens

Part Number	LED Peak Wavelength	Output Power (mW/cm^2) Min	I_F (mA) Typ / Max	Total Beam Angle (Degrees)	Lead Length	Package #
OP123	935 nm	0.40	50 / 100	24	NA	1
OP124		1.00	50 / 100	24	NA	1
OP223	890 nm	1.00	50 / 100	24	NA	1
OP223TX						
OP223TXV						
OP224	890 nm	3.50	50 / 100	24	NA	1
OP224ESA-B1		1.50				
OP224ESA-B2						
OP224ESA-B3						
OP224ESA-C1						
OP224ESA-C2						
OP224ESA-C3						
OP224S						
OP224TX						
OP224TXV						

Package Pill Low Lens

Part Number	Sensor	Light Current $I_{C(ON)}$ (µA) Min	V_R Typ / Max	Input Power E_E (mW/cm^2)	Viewing Angle (Degrees)	Package #
OP900SL	Photodiode	2.4	10 / 100	2.5	35	2
Part Number	**880 nm Sensor**	**Light Current $I_{C(ON)}$ (mA) Min / Max**	**V_{CE} Typ / Max**	**Input Power E_E (mW/cm^2)**	**Viewing Angle (Degrees)**	**Package #**
OP300SL	Darlington	0.80 / NA	5 / 15	1.0	35	2
OP301SL		0.80 / 2.40				
OP302SL		1.80 / 5.40				
OP303SL		3.60 / 12.00				
OP304SL		7.00 / 21.00				
OP305SL		14.00 / NA				
OP600A	Transistor	1.20 / NA	5 / 25	2.5	35	2
OP600B		0.60 / 1.80				
OP600C		0.30 / NA				
OP602TX	Transistor	2.00 / 5.00	5 / 50	20.0	35	2
OP602TXV						
OP603TX	Transistor	4.00 / 8.00	5 / 50	20.0	35	2
OP603TXV						
OP604ESA-B1	Transistor	7.00 / NA	5 / 50	20.0	35	2
OP604ESA-B2						
OP604ESA-B3						
OP604ESA-C1						
OP604ESA-C2						
OP604ESA-C3						
OP604S						
OP604TX						
OP604TXV						
OP641SL	Transistor	0.50 / 3.00	5 / 25	20.0	35	2
OP642SL		2.00 / 5.00				
OP643SL		4.00 / 8.00				
OP644SL		7.00 / 22.00				

Ceramic — 3 Pin Leadless, 4 Pin Leadless, 6 Pin Leadless

Package Ceramic 3-Pin

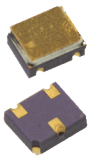

Part Number	Sensor	HFE Min / Max	V_{CEO} (Volts) Maximum	Rise / Fall Times Max. (ns)	Package #
2N2222AUB	NPN Transistor	50 / 325	50	35 / 300	33
2N2222AUBTX					
2N2222AUBTX					
2N2907AUB	PNP Transistor	75 / 450	60	45 / 300	33
2N2907AUBTX					
2N2907AUBTX					

Part Number	Type	V_{DSS} (Volts) Min	$V_{GS(TH)}$ (Volts) Min / Max	$I_{D(ON)}$ (mA) Min	Gfs (ms) Min	$t_{(ON)}$ / $t_{(OFF)}$ (ns) Max	Package #
HCT7000M	MOS Transistor	60	0.8 / 3.0	75	100	10 / 10	33
HCT7000MTX							
HCT7000MTXV							

Package Ceramic 4-Pin

Part Number	Sensor	HFE Min / Max	V_{CEO} (Volts) Maximum	Rise / Fall Times Max. (ns)	Package #
2N2222AUA	NPN Transistor	50 / 325	50	35 / 300	34
2N2222AUATX					
2N2222AUATX					
2N2907AUA	PNP Transistor	75 / 450	60	45 / 300	34
2N2907AUATX					
2N2907AUATX					

Opto Isolator Part Number	LED Peak Wavelength	Sensor	Isolation Voltage (,000)	CTR % Min / Max	IF (mA) Typ / Max	V_{CC} (V) Typ / Max	Rise / Fall Times Max (µs)	Package #
HCC240	935 nm	Transistor	1	25 / 60	10 / 40	5.0 / 30	15 /1 5	34
HCC240TX								
HCC240TXV								
HCC242	935 nm	Transistor	1	100 / 150	10 / 40	5.0 / 30	20 / 20	34
HCC242TX								
HCC242TXV								

Package Ceramic 6-Pin

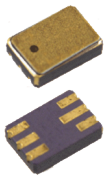

Part Number	Sensor	HFE Min / Max	V_{CEO} (Volts) Maximum	Rise / Fall Times Max. (ns)	Package #
2N4854U	NPN & PNP Transistor	50 / 300	40	45 / 300	36
2N4854UTX					
2N4854UTXV					
2N5794U	Dual—NPN Transistor	35 / 300	40	45 / 310	36
2N5794UTX					
2N5794UTXV					
2N5796U	Dual—PNP Transistor	75 / 300	60	45 / 300	36
2N5796UTX					
2N5796UTXV					

Ceramic — 6 Pin Leadless, 18 Pin Leadless, Single & Multi Chip Surface Mount

Package Ceramic 6-Pin

Opto Isolator Part Number	LED Peak Wavelength	Sensor	Isolation Voltage (,000)	CTR % Min / Max	I_F (mA) Typ / Max	V_{CC} (V) Typ / Max	Rise / Fall Times Max (µs)	Package #
4N22AU	935 nm	Transistor	1	25 / NA	10 / 40	5 / 35	15 / 15	36
4N22AUTX								
4N22AUTXV								
4N23AU	935 nm	Transistor	1	20 / NA	10 / 40	5 / 35	15 / 15	36
4N23AUTX								
4N23AUTXV								
4N24AU	935 nm	Transistor	1	40 / NA	10 / 40	5 / 35	20 / 20	36
4N24AUTX								
4N24AUTXV								
4N47U	935 nm	Transistor	1	50 / NA	1 / 40	5 / 40	20 / 20	36
4N47UTX								
4N47UTXV								
4N48U	935 nm	Transistor	1	100 / 500	1 / 40	5 / 40	20 / 20	36
4N48UTX								
4N48UTXV								
4N49U	935 nm	Transistor	1	200 / 1,000	1 / 40	5 / 40	20 / 20	36
4N49UTX								
4N49UTXV								

Part Number	Type	V_{DSS} (Volts) Min	V_{TH} (Volts) Min / Max	$I_{D(ON)}$ (mA) Min	Gfs (ms) Min	$t_{(ON)}$ / $t_{(OFF)}$ Max (ns)	Package #
HCT802T	MOSFET	90	0.75 / 2.50	1.5	170	15 / 17	36
HCT802TX							
HCT802TXV							

Package Ceamic 18-Pin

Part Number	Sensor	HFE Min / Max	V_{CEO} (Volts) Maximum	Rise / Fall Times Max. (ns)	Package #
2N6987U	Quad—PNP Transistor	75 / 450	60	45 / 300	42
2N6987UTX					
2N6987UTXV					
2N6989U	Quad—NPN Transistor	50 / 325	50	35 / 300	42
2N6989UTX					
2N6989UTXV					

Package Surface Mount

Part Number	LED Peak Wavelength	Output Power (µW) Min	I_F (mA) Typ / Max	Total Beam Angle (Degrees)	Rise / Fall Times (nS) Typ	Package #
OPR5200	890 nm	350	20 / 50	90	500 / 250	31

Part Number	Sensor	Light Current $I_{C(ON)}$ (µA) Min	V_{CE} Max	Input Power E_E (µW/cm^2)	Viewing Angle (Degrees)	Package #
OPR5500	Transistor	36	30	150	120	31

Package Single

Part Number	Receiver Type	# of Elements	Responsivity (mA/mW) Min	Reverse Voltage Maximum	Active Area mm^2	Package #
OPR5910	Photodiode	1	0.45	35	0.73	32
OPR5913	Photodiode		0.40	10	25.00	37
OPR5915	Photodiode		0.45	35	7.30	43

Multi Chip Surface Mount, Reflective Surface Mount, Surface Mount 0805, 1206

Package Three

Part Number	Sensor	# of Elements	Icc (mA) Typ / Max	Optical Hysteresis (%) Typical	Optical Offset (%) Min / Max	Package #
OPR5011	Differential Optical Comparator	3	9 / 20	40.00	-40/+40	41

Package Quad

Part Number	Receiver Type	# of Elements	Responsivity (mA/mW) Min	Reverse Voltage Min	Active Area mm^2	Package #
OPR5911	Photodiode Array	4	0.45	14	1.00	38
OPR5925	Photodiode Array	4	0.45	35	0.64	38

Package Six

Part Number	Sensor	# of Elements	Responsivity (mA/mW) Min	Reverse Voltage Min	Active Area mm^2	Package #
OPR2100	Photodiode Array	6	0.45	50	2.90	39
OPR2101	Small Photodiode Array	6	0.45	50	2.90	40

Package Reflective

Reflective Switch Part Number	LED Peak Wavelength	Sensor	# of Elements	$I_{C(ON)}$ (µA) Min / Typ	I_F (mA) Typ / Max	V_{CE} Typ / Max	Package #
OPR5005	890 nm	Phototransistor	2	100	20 / 50	5 / 30	35

Package 0805 Flat Lens

Part Number	LED Peak Wavelength	Output Power (mW/cm^2) Min / Max	V_F (V) Max	I_F (mA) Typ / Max	Total Beam Angle (Degrees)	Lead Length	Package #
OP200	880 nm	0.2 / NA	1.5	20 / 50	120	N/A	132

Package 1206 Flat Lens

Part Number	LED Peak Wavelength	Output Power (mW/cm^2) Min / Max	V_F (V) Max	I_F (mA) Typ / Max	Total Beam Angle (Degrees)	Lead Length	Package #
OP250	880 nm	0.2 / NA	1.5	20 / 50	160	N/A	133
Part Number	**Sensor**	**Light Current $I_{C(ON)}$ (mA) Min**	**V_{CE} Typ / Max**	**Input Power E_E (mW/cm^2)**	**Viewing Angle (Deg)**	**Lead Length**	**Package #**
OP521	Phototransistor	0.25	5 / 30	5.0	160	N/A	133

Part Number	Sensor	Light Current $I_{C(ON)}$ (mA) Min	V_{CE} Typ / Max	Input Power E_E (mW/cm^2)	Viewing Angle (Deg)	Lead Length	Package #
OP520	Phototransistor	0.25	5 / 30	5.0	160	N/A	133

Package 1206 Inner Lens

Part Number	LED Peak Wavelength	Output Power (mW/cm^2) Min / Max	V_F (V) Max	I_F (mA) Typ / Max	Total Beam Angle (Degrees)	Lead Length	Package #
OP251	880 nm	0.3 / NA	1.5	20 / 50	105	N/A	134
Part Number	**Sensor**	**Light Current $I_{C(ON)}$ (mA) Min**	**V_{CE} Typ / Max**	**Input Power E_E (mW/cm^2)**	**Viewing Angle (Deg)**	**Lead Length**	**Package #**
OP522	Phototransistor	0.5	5 / 30	5.0	105	N/A	134

Package PLCC Flat Lens

Part Number	LED Peak Wavelength	Output Power (mW/cm^2) Min / Max	V_F (V) Max	I_F (mA) Typ / Max	Total Beam Angle (Degrees)	Lead Length	Package #
OP280	880 nm	0.5 / NA	1.5	20 / 50	100	N/A	131
Part Number	**Sensor**	**Light Current $I_{C(ON)}$ (mA) Min**	**V_{CE} Typ / Max**	**Input Power E_E (mW/cm^2)**	**Viewing Angle (Deg)**	**Lead Length**	**Package #**
OP580	Phototransistor	1.0	5 / 30	5.0	100	N/A	131

Surface Mount 1.9mm Ceramic Hall-effect

Package 1.9mm Dome Lens

Part Number	LED Peak Wavelength	Output Power (mW/cm^2) Min / Max	V_F (V) Max	I_F (mA) Typ / Max	Total Beam Angle (Degrees)	Lead Length	Package #
OP270	880 nm	1.5 / NA	1.5	20 / 50	25	Axial	135
OP271						Gull Wing	136
OP272						Yoke	137
OP273						Rev. Gull	138

Part Number	Sensor	Light Current $I_{C(ON)}$ (mA) Min	V_{CE} Typ / Max	Input Power E_E (mW/cm^2)	Viewing Angle (Deg)	Lead Length	Package #
OP570	Phototransistor	2.5	5 / 30	5.0	25	Axial	135
OP571						Gull Wing	136
OP572						Yoke	137
OP573						Rev. Gull	138

Package Side Sensing Ceramic

Part Number	Hi-Reliability Hallogic® Sensor	Operate Point Gauss Min / Typ / Max	Release Point Gauss Min / Typ / Max	Hysteresis Gauss Min / Typ / Max	Vcc (Volts) Min / Max	Lead Length	Package #
OMH090	Uni-Polar Non-Latching	50/90/180	30 / 60 / 160	5 / 30 / 70	4.5 / 24.0	0.50″	29
OMH090B							
OMH090S							
OMH3019		175 / 420 / 500	125 / 220 / 420	30 / 100 / 155			
OMH3019B							
OMH3019S							
OMH3020		70 / 220 / 350	50 / 165 / 330	15 / 55 / 200			
OMH3020B							
OMH3020S							
OMH3040		70 / 150 / 200	50 / 115 / 180	110 / 35 / 60			
OMH3040B							
OMH3040S							
OMH3075	Bi-Polar Latching	50 / 150 / 250	-250 / -150 / -50	100 / 300 / 500	4.5 / 24.0	0.50″	29
OMH3075B							
OMH3075S							
OMH3131		20 / 60 / 95	10 / 45 / 85	5 / 15 / 40			
OMH3131B							
OMH3131S							

Package Side Sensing TO-92

Part Number	Type	Operate Point Gauss Min / Typ / Max	Release Point Gauss Min / Typ / Max	Hysteresis Gauss Min / Typ / Max	Vcc (Volts) Min / Max	Lead Length	Package #
OH090U	Uni-Polar Hallogic®	0 / 90 / 180	-100 / 65 / 100	10 / 25 / 100	4.5 / 24.0	0.50″	30
OH180U		70 / 180 / 290	0 / 140 / 230	20 / 40 / 120			
OH360U		235 / 300 / 465	120 / 235 / 325	30 / 65 / 200			
OHN3013U	Uni-Polar Hallogic®	NA / 300 / 450	25 / 235 / NA	30 / 65 / NA	4.5 / 24.0	0.50″	30
OHS3013U							
OHN3019U		NA / 300 / 500	125 / 235 / NA	50 / 65 / NA			
OHS3019U							

Plastic Hall-effect, Hall-effect Slotted Switch

Package Side Sensing TO-92

Part Number	Type Hallogic®	Operate Point Gauss Min / Typ / Max	Release Point Gauss Min / Typ / Max	Hysteresis Gauss Min / Typ / Max	Vcc (Volts) Min / Max	Lead Length	Package #
OHN3020U	Uni-Polar Hallogic®	NA / 230 / 350	50 / 180 / NA	20 / 50 / NA	4.5 / 24.0	0.50″	30
OHS3020U		NA / 230 / 350	50 / 180 / NA	20 / 50 / NA			
OHN3030U		NA / 205 / 250	0 / 160 / NA	20 / 45 / NA			
OHS3030U		NA / 205 / 250	0 / 160 / NA	20 / 45 / NA			
OHN3040U	Uni-Polar Non-Latching	NA / 150 / 200	50 / 115 / NA	20 / 35 / NA	4.5 / 24.0	0.50″	30
OHS3040U							
OHN3075U	Bipolar Latching	50 / 100 / 250	-250 / -100 / -50	100 / 200 / 500	4.5 / 24.0	0.50″	30
OHS3075U		50 / 100 / 250	-250 / -100 / -50	100 / 200 / 500			
OHN3113U	Uni-Polar Non-Latching	NA / NA / 510	20 / NA / NA	10 / NA / NA	4.5 / 24.0	0.50″	30
OHN3119U		100 / NA / 545	50 / NA / 495	50 / NA / NA			
OHS3119U		45 / NA / 575	25 / NA / 555	20 / NA / NA			
OHN3120U		70 / NA / 425	50 / NA / 405	20 / NA / NA			
OHS3120U		35 / NA / 450	25 / NA / 430	20 / NA / NA			
OHN3130U		NA / NA / 175	-175 / NA / NA	20 / NA / NA			
OHS3130U		NA / NA / 200	-200 / NA / NA	20 / NA / NA			
OHN3131U		-75 / NA / 95	-95 / NA / 85	10 / NA / NA			
OHS3131U		-115 / NA / 135	-135 / NA / 125	10 / NA / NA			
OHN3140U		45 / NA / 260	25 / NA / 240	20 / NA / NA			
OHS3140U		45 / NA / 270	25 / NA / 250	20 / NA / NA			
OHN3175U	Bipolar Latching	15 / NA / 180	-180 / NA / -15	80 / NA / NA	4.5 / 24.0	0.50″	30
OHS3175U		10 / NA / 260	-10 / NA / -260	60 / NA / NA			
OHN3177U		25 / NA / 150	-150 / NA / -25	50 / NA / NA			
OHS3177U		25 / NA / 200	-200 / NA / -25	50 / NA / NA			

Part Number	Type Hallogic®	Sensitivity (mV/G) Min / Max	Positive Linearity Min / Max (%)	Negative Linearity Min / Max (%)	Output Symmetry Min / Max (%)	Vcc (Volts) Min / Max	Package #
OHN3150U	Linear Ratiometric	2.25 / 2.75	99 / 110	90 / 100	95 / 105	4.5 / 24.0	30
OHS3150U							
OHN3151U							
OHS3151U							

Package 0.120 Gap

Part Number	Type	V_{OL} (mV) I_{OL}=20mA Typ / Max	I_{OH} (µA) Vout=24Volts Typ / Max	Rise / Fall Time Max (µS)	Vcc (Volts) Min / Max	Lead Length	Package #
OHB900	Hall-effect Open Collector Non-Latching	Open Slot 100 / 400	Blocked Slot 0.1 / 10.0	1.0/1.0	4.5 / 24.0	0.50″	108

Side Looker 0.060" Base External Lens 2 Lead

Package Sidelooker 0.060" Base

Part Number	LED Peak Wavelength	Output Power (mW/cm^2) Min / Max	I_F (mA) Typ / Max	Total Beam Angle (Degrees)	Lead Length	Package #
OP140A	935 nm	0.40 / NA	20 / 50	40	0.50"	23
OP140B		0.30 / 0.55				
OP140C		0.20 / 0.40				
OP140D		0.10 / NA				
OP240A	890 nm	0.60 / NA	20 / 50	40	0.50"	23
OP240B		0.40 / 1.20				
OP240C		0.20 / 0.86				
OP240D		0.05 / NA				

Part Number	Sensor	Light Current $I_{C(ON)}$ (µA) Min / Max	V_R Typ / Min	Input Power E_E (mW/cm^2)	Viewing Angle (Degrees)	Lead Length	Package #
OP950	Photodiode	8.0 / 18.0	5.0/60	1.0	95	0.50"	23

Part Number	Sensor	Light Current $I_{C(ON)}$ (µA) Min / Max	V_{CE} Typ / Max	Input Power E_E (mW/cm^2)	Viewing Angle (Degrees)	Lead Length	Package #
OP550A	Transistor	2.55 / NA	5.0 / 30	1.0	60	0.50"	23
OP550B		1.30 / 4.70					
OP550C		0.25 / 2.40					
OP550D		0.25 / NA					
OP560A	Darlington	6.60/NA	2.0/15	0.10	60	0.50"	23
OP560B		3.30/9.80					
OP560C		1.10/NA					
OP750A	Transistor & Rbe	2.25 / 7.00	5.0 / 30	1.0	60	0.50"	23
OP750B		1.50 / 4.20					
OP750C		0.85 / 2.80					
OP750D		0.85 / 7.00					
OP770A	Transistor&Cce	2.25 / 7.00	5.0 / 30	1.0	60	0.50"	23
OP770B		1.50 / 4.20					
OP770C		0.85 / 2.80					
OP770D		0.85 / 7.00					

Optical Pair Part Number	LED Wavelength	Sensor	IC(ON) Min (mA)	I_F (mA) Typ / Max	VCE (V)	Lead Length	Package #
OPS690	935 nm	Transistor	0.10	20 / 50	10.0	0.50"	23
OPS691			0.50				
OPS692			1.00				
OPS693			2.00				

Side Looker 0.060" Base External Lens 2 Lead and 3 Lead

Package Sidelooker 0.060" Base	Part Number	Photologic® Sensor	Input Power E_E (mW/cm^2) Min / Max	V_{CC} (Volts) Min / Max	Lead Length / Spacing	Package #
	OPL530	10K Pull-Up	0.12 / 0.38	4.5 / 16.0	0.50" / 0.075"	25
	OPL530A		0.12 / 0.28			
	OPL530B		0.23 / 0.38			
	OPL530-OC	Open Collector	0.12 / 0.38	4.5 / 16.0	0.50" / 0.075"	25
	OPL530-OCA					
	OPL530-OCB		0.23 / 0.38			
	OPL531	Inv. 10K Pull-Up	0.12 / 0.38	4.5 / 16.0	0.50" / 0.075"	25
	OPL531A					
	OPL531B		0.23 / 0.38			
	OPL531-OC	Inv. Open Collector	0.12 / 0.38	4.5 / 16.0	0.50" / 0.075"	25
	OPL531-OCA					
	OPL531-OCB		0.23 / 0.38			
	OPL550	Totem-Pole	0.25 / 2.4	4.5 / 5.5	0.50" / 0.075"	25
	OPL550A		0.25 / 1.4			
	OPL550-OC	Open-Collector	0.25 / 2.4			
	OPL550-OCA		0.25 / 1.4			
	OPL551	Inv-Totem-Pole	0.25 / 2.4	4.5 / 5.5	0.50" / 0.075"	25
	OPL551A		0.25 / 1.4			
	OPL551-OC	Inv-Open-Collector	0.25 / 2.4			
	OPL551-OCA		0.25 / 1.4			
	OPL560	Totem-Pole	0.09 / 0.55	4.5 / 16	0.50" / 0.075"	25
	OPL560A		0.09 / 0.36			
	OPL560-OC	Open-Collector	0.09 / 0.55			
	OPL560-OCA		0.09 / 0.36			
	OPL561	Inv-Totem-Pole	0.09 / 0.55	4.5 / 16	0.50" / 0.075"	25
	OPL561A		0.09 / 0.36			
	OPL561-OC	Inv-Open-Collector	0.09 / 0.55			
	OPL561-OCA		0.09 / 0.36			
	OPL562	Totem-Pole	0.025 / 0.230	4.5 / 16	0.50" / 0.075"	25
	OPL562A		0.025 / 0.140			
	OPL562-OC	Open-Collector	0.025 / 0.230			
	OPL562-OCA		0.025 / 0.140			
	OPL563	Inv-Totem-Pole	0.025 / 0.230	4.5 / 16	0.50" / 0.075"	25
	OPL563A		0.025 / 0.140			
	OPL563-OC	Inv-Open-Collector	0.025 / 0.230			
	OPL563-OCA		0.025 / 0.140			

Side Looker 0.100" Base Internal Lens 2 Leads

Package Sidelooker 0.100" Base

Part Number	LED Peak Wavelength	Output Power (mW/cm^2) Min / Max	I_F (mA) Typ/Max	Total Beam Angle (Degrees)	Lead Length	Package #
OP145A	935 nm	0.40 / NA	20	40	0.50"	24
OP145B		0.30 / 0.55				
OP145C		0.20 / 0.40				
OP145D		0.10 / NA				
OP245A	890 nm	0.60 / NA	20	40	0.50"	24
OP245B		0.40 / 1.20				
OP245C		0.20 / 0.86				
OP245D		0.05 / NA				

Part Number	Sensor	Light Current $I_{C(ON)}$ (µA) Min / Max	V_R Typ / Max	Input Power E_E (mW/cm^2)	Viewing Angle (Degrees)	Lead Length	Package #
OP955	Photodiode	8.0 / 18.0	5.0 / 60	1.0	95	0.50"	24

Part Number	Sensor	Light Current $I_{C(ON)}$ (mA)	V_{CE} Typ / Max	Input Power E_E (mW/cm^2)	Viewing Angle (Degrees)	Lead Length	Package #
OP555A	Transistor	2.55 / NA	5.0 / 30	1.0	60	0.50"	24
OP555B		1.30 / 4.70					
OP555C		0.25 / 2.40					
OP555D		0.25 / NA					
OP565A	Darlington	6.60 / NA	2.0 / 15	0.10	60	0.50"	24
OP565B		3.30 / 9.80					
OP565C		1.10 / NA					
OP755A	Transistor & R_{BE}	2.25 / 7.00	5.0 / 30	1.0	60	0.50"	24
OP755B		1.50 / 4.20					
OP755C		0.85 / 2.80					
OP755D		0.85 / 7.00					
OP775A	Transistor & C_{CE}	2.25 / 7.00	5.0 / 30	1.0	60	0.50"	24
OP775B		1.50 / 4.20					
OP775C		0.85 / 2.80					
OP775D		0.85 / 7.00					

Optical Pairs Part Number	LED Wavelength	Sensor	IC(ON) Min (mA)	I_F (mA) Typ / Max	VCE (V)	Lead Length	Package #
OPS695	935 nm	Transistor	0.10	20 / 50	10.0	0.50"	24
OPS696			0.50				
OPS697			1.00				
OPS698			2.00				

Package Sidelooker 0.100" Base

Part Number	Sensor	Light Current $I_{C(ON)}$ (µA) Min / Max	V_R Typ / Max	Input Power E_E (mW/cm^2)	Viewing Angle (Degrees)	Lead Length	Package #
OP954	Photodiode	3.5 / 8.0	5.0 / 60	1.0	128	0.50"	27

Side Looker 0.100" Base Internal Lens 3 Leads

Package Sidelooker 0.100" Base

Part Number	Photologic®	Input Power E_E (mW/cm^2) Min / Max	V_{CC} (V) Min / Max	Lead Length / Spacing	Package #
OPL535	10K Pull-Up	0.08 / 0.40	4.5/16.0	0.50" / 0.075"	26
OPL535A		0.08 / 0.25			
OPL535B		0.20 / 0.40			
OPL535-OC	Open Collector	0.08 / 0.40	4.5/16.0	0.50" / 0.075"	26
OPL535-OCA		0.08 / 0.25			
OPL535-OCB		0.20 / 0.40			
OPL536	Inv. 10K Pull-Up	0.08 / 0.40	4.5/16.0	0.50" / 0.075"	26
OPL536A		0.08 / 0.25			
OPL536B		0.20 / 0.40			
OPL536-OC	Inv. Open Collector	0.08 / 0.40	4.5/16.0	0.50" / 0.075"	26
OPL536-OCA		0.08 / 0.25			
OPL536-OCB		0.20 / 0.40			

Package Sidelooker 0.100" Base

Part Number	Photologic®	Input Power E_E (mW/cm^2) Min / Max	V_{CC} (V) Min / Max	Lead Length / Spacing	Package #
OPL583	Dual Channel	0.05 / 0.25	4.5/16	0.50" / 0.075"	28

Package T-1 0.050" Lead Spacing

Part Number	LED Peak Wavelength	Output Power (mW/cm^2) Min / Max	I_F (mA) Typ / Max	Total Beam Angle (Degrees)	Lead Length	Package #
OP165A	935 nm	1.95 / NA	20 / 50	18	0.50"	16
OP165B		1.40 / 2.20				
OP165C		0.85 / 1.60				
OP165D		0.28 / NA				
OP265A	890 nm	2.70 / NA	20 / 50	18	0.50"	16
OP265B		1.65 / 4.70				
OP265C		0.54 / 3.30				
OP265D		0.54 / NA				

Part Number	Sensor	Light Current $I_{C(ON)}$ (µA) Min / Max	V_R Typ / Max	Input Power E_E (mW/cm^2)	Viewing Angle (Degrees)	Lead Length	Package #
OP905	Photodiode	14.0 / 32.0	5.0 / 60	0.5	95	0.50"	16

Part Number	Sensor	Light Current $I_{C(ON)}$ (mA) Min / Max	V_{CE} Typ / Max	Input Power E_E (mW/cm^2)	Viewing Angle (Degrees)	Lead Length	Package #
OP505A	Transistor	4.30 / NA	5.0 / 30	1.0	25	0.50"	16
OP505B		2.15 / 5.95					
OP505C		1.10 / 3.00					
OP505D		0.55 / NA					
OP535A	Darlington	10.50 / NA	2.0 / 15	0.10	25	0.50"	16
OP535B		3.50 / 32.00					
OP535C		1.50 / NA					
OP705A	Transistor & Rbe	3.95 / 12.00	5.0 / 30	1.0	25	0.50"	16
OP705B		2.65 / 7.25					
OP705C		1.50 / 4.85					
OP705D		1.50 / 12.00					

T-1 No Lens 0.05" Spacing T-1 Dome Lens 0.10" Spacing, T-1 No Lens 0.10"

Package T-1 Flat 0.050" Lead Spacing

Part Number	LED Peak Wavelength	Output Power (mW/cm^2) Min / Max	I_F (mA) Typ / Max	Total Beam Angle (Degrees)	Lead Length	Package #
OP165W	935 nm	0.50 / NA	20 / 50	90	0.50"	17
OP265W	890 nm	1.00 / NA	20 / 50	90		
OP265WPS	850 nm	.055 / .55	20 / 50	120		

Part Number	Sensor	Light Current $I_{C(ON)}$ (mA) Min	V_{CE} Typ / Max	Input Power E_E (mW/cm^2)	Viewing Angle (Degrees)	Lead Length	Package #
OP505W	Transistor	0.10	5.0 / 30	0.75	90	0.50"	17

Package T-1 0.100" Lead Spacing

Part Number	LED Peak Wavelength	Output Power (mW/cm^2) Min / Max	I_F (mA) Typ / Max	Total Beam Angle (Degrees)	Lead Length	Package #
OP166A	935 nm	1.95 / NA	20 / 50	18	0.50"	14
OP166B		1.40 / 2.20				
OP166C		0.85 / 1.60				
OP166D		0.28 / NA				
OP266A	890 nm	2.70 / NA	20 / 50	18	0.50"	14
OP266B		1.65 / 4.70				
OP266C		0.54 / 3.30				
OP266D		0.54 / NA				

Part Number	Sensor	Light Current $I_{C(ON)}$ (µA) Min / Max	V_R Typ / Max	Input Power E_E (mW/cm^2)	Viewing Angle (Degrees)	Lead Length	Package #
OP906	Photodiode	16.0 / 35.0	5.0 / 60	0.5	95	0.50"	14

Part Number	Sensor	Light Current $I_{C(ON)}$ (mA)	V_{CE} Typ / Max	Input Power E_E (mW/cm^2)	Viewing Angle (Degrees)	Lead Length	Package #
OP506A	Transistor	4.30 / NA	5.0 / 30	1.0	60	0.50"	14
OP506B		2.15 / 5.95					
OP506C		1.10 / 3.00					
OP506D		0.55 / NA					

Optical Pair Part Number	LED Peak Wavelength	Sensor	$I_{C(ON)}$ (mA) Min / Max	I_F (mA) Typ / Max	VCE (V)	Lead Length	Package #
OPS665	935 nm	Transistor	0.50 / NA	20 / 50	5.0	0.50"	14
OPS666			1.00 / 10.00				
OPS667			5.00 / NA				

Package T-1 Flat 0.100" Lead Spacing

Part Number	LED Peak Wavelength	Output Power (mW/cm^2) Min / Max	I_F (mA) Typ / Max	Total Beam Angle (Degrees)	Lead Length	Package #
OP166W	935 nm	0.50 / NA	20 / 50	90	0.50"	15
OP266W	890 nm	1.00 / NA				

Part Number	Sensor	Light Current $I_{C(ON)}$ (mA) Min / Max	V_{CE} Typ / Max	Input Power E_E (mW/cm^2)	Viewing Angle (Degrees)	Lead Length	Package #
OP506W	Transistor	0.10 / NA	5.0 / 30	0.75	90	0.50"	15

Plastic TO-18 Plastic T-1 3/4 Dome Lens

Package Plastic TO-18

Part Number	LED Peak Wavelength	Output Power (mW/cm^2) Min / Max	I_F (mA) Typ / Max	Total Beam Angle (Degrees)	Lead Length	Package #
OP298A	890 nm	3.0 / NA	50 / 100	60	0.50"	20
OP298B		2.4 / 4.8				
OP298C		1.8 / NA				

Part Number	Sensor	Light Current $I_{C(ON)}$ (mA) Min / Max	V_{CE} Typ / Max	Input Power E_E (mW/cm^2)	Viewing Angle (Degrees)	Lead Length	Package #
OP598A	Transistor	7.5 / NA	5 / 25	1.7	25	0.75"	20
OP598B		5.0 / 10.0					
OP598C		2.5 / NA					
OP798A	Transistor & Rbe	4.9 / 15.0	5 / 30	1.7	25	0.75"	20
OP798B		3.3 / 9.2					
OP798C		1.9 / 6.1					
OP798D		1.9 / 15.0					

Package Plastic T0-18

Part Number	LED Peak Wavelength	Output Power (mW/cm^2) Min / Max	I_F (mA) Typ / Max	Total Beam Angle (Degrees)	Lead Length	Package #
OP293A	890 nm	16.0 / NA	50 / 100	60	0.50"	19
OP293B		13.0 / 26.0				
OP293C		10.0 / NA				

Part Number	Sensor	Light Current $I_{C(ON)}$ (µA) Min / Max	V_R Typ / Max	Input Power E_E (mW/cm^2)	Viewing Angle (Degrees)	Lead Length	Package #
OP993	Photodiode	12.5 / 28.5	5 / 60	1.7	118.00	0.69"	19

Part Number	Sensor	Light Current $I_{C(ON)}$ (mA) Min / Max	V_{CE} Typ / Max	Input Power E_E (mW/cm^2)	Viewing Angle (Degrees)	Lead Length	Package #
OP593A	Transistor	3.00 / NA	5 / 30	1.70	130	0.75"	19
OP593B		2.00 / 4.00					
OP593C		1.00 / NA					
OP793A	Transistor &R_{BE}	2.45 / 7.50	5 / 30	1.70	130	0.75"	19
OP793B		1.65 / 4.55					
OP793C		0.90 / 3.05					
OP793D		0.90 / 7.50					

Package T-1 3/4

Part Number	LED Peak Wavelength	Output Power (mW/cm^2) Min / Max	I_F (mA) Typ / Max	Total Beam Angle (Degrees)	Lead Length	Package #
OP290A	890 nm	210 / NA	100 / 1,500 Pulsed	50	0.69"	18
OP290B		180 / 300				
OP290C		150 / NA				
OP291A	890 nm	16.0 / NA	50 / 100	50	0.69"	18
OP291B		13.0 / 26				
OP291C		10.0 / NA				
OP292A	890 nm	2.7 / NA	5 / 20	50	0.69"	18
OP292B		2.2 / 4.4				
OP292C		1.7 / NA				

T 1 3/4 Dome Lens Endlooker External Lens and No Lens

Package T-1 3/4

Part Number	LED Peak Wavelength	Output Power (mW/cm²) Min / Max	I_F (mA) Typ / Max	Total Beam Angle (Degrees)	Lead Length	Package #
OP294	890 nm	0.50 / 1.50	5 / 50	50	0.69"	18
OP295A	890 nm	44.0 / NA	100 / 1,500 Pulsed	50	0.69"	18
OP295B		33.0 / 77.0				
OP295C		22.0 / NA				
OP296A	890 nm	3.6 / NA	50 / 100	50	0.69"	18
OP296B		2.6 / 6.6				
OP296C		1.6 / NA				
OP297A	890 nm	0.70 / NA	5 / 20	50	0.69"	18
OP297B		0.50 / 1.30				
OP297C		0.30 / NA				
OP299	890 nm	0.15 / 0.45	5 / 50	20	0.69"	18

Part Number	Sensor	Light Current $I_{C(ON)}$ (µA) Min / Max	V_R Typ/Max	Input Power E_E (mW/cm²)	Viewing Angle (Degrees)	Lead Length	Package #
OP999	Diode	.6.5 / 15.0	5.0 / 60	0.25	18.00	0.69"	18

Part Number	Sensor	Light Current	V_{CE}	Input Power E_E	Viewing Angle	Lead Length	Package
OP599A	Transistor	2.35 / NA	5.0 / 30	0.25	20	0.75"	18
OP599B		1.20 / 3.85					
OP599C		0.40 / 1.95					
OP599D		0.20 / NA					

Package Endlooker Lensed

Part Number	LED Peak Wavelength	Output Power (mW/cm²) Min / Max	I_F (mA) Typ / Max	Total Beam Angle (Degrees)	Lead Length	Package #
OP169A	935 nm	0.180 / NA	20 / 50	18	0.50"	22
OP169B		0.108 / 0.220				
OP169C		0.027 / NA				
OP269A	890 nm	0.34 / NA	20 / 50	18	0.50"	22
OP269B		0.42 / 0.82				
OP269C		0.58 / NA				

Part Number	Sensor	Light Current $I_{C(ON)}$ (mA) Min / Max	V_{CE} Typ / Max	Input Power E_E (mW/cm²)	Viewing Angle (Degrees)	Lead Length	Package #
OP509A	Transistor	5.7 / NA	5.0 / 30.0	1.0	50	0.50"	22
OP509B		1.4 / 10.6					
OP509C		0.7 / NA					

Package Endlooker

Part Number	LED Peak Wavelength	Output Power (mW/cm²) Min / Max	I_F (mA) Typ / Max	Total Beam Angle (Degrees)	Lead Length	Package #
OP168FA	935 nm	0.48 / NA	20 / 50	104	0.50"	21
OP168FB		0.43 / 0.73				
OP168FC		0.27 / NA				
OP268FA	890 nm	0.64 / NA	20 / 50	104	0.50"	21
OP268FB		0.45 / 0.99				
OP268FC		0.36 / NA				
OP268FPS	850 nm	0.10 / 0.90	20 / 50	104	0.50"	21

Part Number	Sensor	Light Current	V_{CE}	Input Power E_E	Viewing Angle	Lead Length	Package
OP508FA	Transistor	2.70 / NA	5.0 / 30.0	1.0	120	0.50"	21
OP508FB		0.65 / 5.10					
OP508FC		0.34 / NA					
OP538FA	Darlington	6.8 / NA	5.0 / 30.0	0.5	120	0.50"	21
OP538FB		2.3 / 20.5					
OP538FC		1.1 / NA					

Plastic Fiber Optic Components

Package PFOT-T	Fiber Optic Transmitter Part Number	LED Peak Wavelength	Output Power (dBm) Min / Max	I_F (mA) Typ / Max	Rise / Fall Time (ns) Max	Plastic Fiber Size (mm)	Lead Length	Package #
	OPF3280	650 nm	-7.4 / -3.6	25 / 35	6.0 / 6.0	1.00	0.50"	53

Package PFOT-R	Fiber Optic Receiver Part Number	Data Rate	Receiver Type	Responsivity (mV/µW) Min / Max	Output Pulse Width Variation (ns) Min / Max	Plastic Fiber Size (mm)	Lead Length	Package #
	OPF4135	50 MBd	DC- Coupled	-24.5 / -2.0	15.5 / 32.8	1.00	0.50"	54

Package TO-18 Clear Cap	Part Number	LED Peak Wave-length (nm)	Output Power (mW) Min	I_F (mA) Typ / Max	Rise / Fall Time (ns)	Fiber Size (µm)	Lead Length	Package #
	OPF370A	850 nm	25.0	50 / 100	8.0 / 10.0	50/125	0.50"	45
	OPF370B		15.0					
	OPF370C		10.0					
	OPF370D		5.00					
	OPF390A	850 nm	20.0	50 / 100	6.0 / 6.0	50/125	0.50"	45
	OPF390B		15.0					
	OPF390C		10.0					
	OPF390D		5.0					
	OPF395A	850 nm	20.0	50 / 100	4.5 / 4.5	50/125	0.50"	45
	OPF395B		15.0					
	OPF395C		10.0					
	OPF395D		5.0					

Package TO-18 Green Cap	Part Number	Sensor	Light Current $I_{C(ON)}$ (A/W) Min	V_{CE} Typ / Max	Rise Time (ns)	Fiber Size (µm)	Lead Length	Package #
	OPF470	Photodiode	0.45	5 / 100	6.0	50/125	0.50"	45
	OPF480				1.0			
	Part Number	**Data Rate**	**Integrated Receiver Type**	**Input Sensitivity (dbm) / (µW)**	**Output Type**	**Fiber Size (µm)**	**Lead Length**	**Package #**
	OPF500	200Kbps Receiver	10K Pull-up	-28.2 / 1.5	TTL / LSTTL	100/140	.050"	45
	OPF510	200Kbps Receiver	Inv-10K Pull-up	-40 / 0.1	TTL / LSTTL			
	OPF520	5 Mbps Reciever	DC Coupled Schmitt	-9.2 / 120	TTL - CMOS			
	Part Number	Data Rate	Integrated Receiver Type	Responsivity (mV/µW) Min / Max	Peak Input Power (dbm) Min / Max	Output Type	Fiber Size (µm)	Package #
	OPF560	125MHz Receiver	AC Coupled	5.3 / 9.6	-7.6 / 175	EL/TTL	100/140	45

Fiber Optic Plastic & Metal ST

Package Fiber Optic ST-Plastic

Part Number	LED Peak Wavelength	Coupled Power (dbm)/(µW) Min	I_F (mA) Typ / Max	Rise / Fall Time (ns)	Fiber Size (µm)	Lead Length	Package #
OPF692-1	850 nm	-19 / 12.6	50 / 100	6.5 / 6.5	50/125	0.50″	48
OPF692-2		-16 / 25.1					

Part Number	Receiver Type	Responsivity (mA/mW) Min	Rise Time (ns)	Reverse Voltage Typ / Max	Lead Length	Package #
OPF792	Photodiode	0.45	6.0	5.0 / 100	0.50″	48

Package Fiber Optic ST—Short

Part Number	LED Peak Wavelength	Coupled Power (dbm) / (µW) 50/125 Cable	Forward Current I_F(mA)	Rise / Fall Time (ns)	Fiber Size (µm)	Lead Length	Package #
OPF693-1	850 nm	-19 / 12.6	50 / 100	6.5 / 6.5	50 / 125	0.50″	48
OPF693-2		-16 / 25.1					

Part Number	Receiver Type	Responsivity (mA/mW) Min	Rise Time (ns)	Reverse Voltage Typ / Max	Lead Length	Package #
OPF793	Photodiode	0.45	6.0	5.0 / 100	0.50″	48

Package Fiber Optic ST—Tall

Part Number	LED Peak Wavelength	Coupled Power (dbm)/(µW) 50/125 Cable Min	I_F(mA) Typ / Max	Rise / Fall Time Max. (ps)	Fiber Size (µm)	Lead Length	Package #
OPF322A	850 nm	-18.2 / 15	50 / 100	8.0 / 10.0	50 / 125	0.50″	47
OPF322B		-20 / 10					
OPF322C		-23 / 5					
OPF342A	850 nm	-17 / 20	50 / 100	6.0 / 6.0	50 / 125	0.50″	47
OPF342B		-18.2 / 15					
OPF342C		-20 / 10					
OPF342D		-23 / 5					
OPF347A	850 nm	-17 / 20	50 / 100	6.0 / 6.0	50 / 125	0.50″	47
OPF347B		-18.2 / 15					
OPF347C		-20 / 10					
OPF347D		-23 / 5					
OPF372A	850 nm	-16 / 25	50 / 100	8.0 / 10.0	50/125	0.50″	47
OPF372B		-18.2 / 15					
OPF372C		-20 / 10					
OPF372D		-23 / 5					
OPF392A	850 nm	-17 / 20	50 / 100	6.0 / 6.0	50/125	0.50″	47
OPF392B		-18.2 / 15					
OPF392C		-20 / 10					
OPF392D		-23 / 5					
OPF397A	850 nm	-17 / 20	50 / 100	4.5 / 4.5	50/125	0.50″	47
OPF397B		-18.2 / 15					
OPF397C		-20 / 10					
OPF397D		-23 / 5					
OPF694-1	850 nm	-19 / 12.6	50 / 100	6.5 / 6.5	50 / 125	0.50″	47
OPF694-2		-16 / 25.1					

Fiber Optic Plastic & Metal ST LC-OSA

Package Fiber Optic ST—Tall

Part Number	VCSEL Peak Wavelength	Data Rate Gbps	Coupled Power (dbm)/(µW) 50/125 Cable Min	I_F (mA) Typ / Max	Rise / Fall Time (ps)	Fiber Size (µm)	Lead Length	Package #
OPV314AT*	850 nm	2.5	-2.2 / 600	7 / 20	90 / 120	50/125	0.50″	47
OPV314BT*			-4 / 400					
OPV314YAT*			-2.2 / 600					
OPV314YBT*			-4 / 400					
OPV315AT*	850 nm	2.5	-5.2 / 300	7 / 20	90 / 120	50/125	0.50″	47
OPV315BT*			-7 / 200					
OPV315YAT*			-5.2 / 300					
OPV315YBT*			-7 / 200					

Part Number	Sensor	Responsivity (mA/mW) Min.	Rise Time (ns)	Reverse Voltage Typ / Max	Lead Length	Package #
OPF422	Photodiode	0.45	6.0	5.0 / 100	0.50"	47
OPF432			1.0			
OPF472			6.0			
OPF482			1.0			
OPF794			6.0			

Part Number	Data Rate	Integrated Receiver Type	Input Sensitivity (dbm) / (µW)	Output Type	Fiber Size (µm)	Lead Length	Package #
OPF502	200Kbps Receiver	10K Pull-up	-28.2 / 1.5	TTL / LSTTL	100/140	.050"	47
OPF507	200Kbps Receiver	10K Pull-up	-27.0 / 2.0	TTL / LSTTL	100/140	.050"	47
OPF512	200Kbps Receiver	Inv-10K Pull-up	-28.2 / 1.5	TTL / LSTTL	100/140	.050"	47
OPF517	200Kbps Receiver	Inv-10K Pull-up	-27.0 / 2.0	TTL / LSTTL	100/140	.050"	47

Integrated Receiver Part Number	Data Rate	Integrated Receiver Type	Input Power (dbm) Logic High Max	Input Power (dbm) Logic Low Min / Max	Output Type	Fiber Size (µm)	Package #
OPF522	5 MBd	DC- Coupled	-40.0	-25.4 / -9.2	Analog	100/140	47

Integrated Receiver Part Number	Data Rate	Integrated Receiver Type	Responsivity (mV/µW) Min / Max	Peak Input Power (dbm) Max	Output Type	Fiber Size (µm)	Package #
OPF562	155 MBd	DC- Coupled	5.3 / 9.6	-7.6	Analog, TTL	100/140	47

Note : * identifies products that are class 1M Laser Safety—See Application Bulletin 221.

Fiber Optic Sugar Cube / Fiber DIP Fiber Optic Modules

Package Cube / DIP ST-Threaded

Part Number	LED Peak Wavelength	Coupled Power (dbm) 50/125 Cable (Min)	Forward Current I_F (mA)	Rise / Fall Time (ns)	Fiber Size (µm)	Package #
OPF1412T	850 nm	-19.0	60	6.5 / 6.5	62.5/125	49
OPF1414T	850 nm	-15.0	60	6.5 / 6.5	62.5/125	

Integrated Receiver Part Number	Data Rate	Integrated Receiver Type	Input Power (dbm) Logic High Max	Input Power (dbm) Logic Low Min / Max	Output Type	Fiber Size (µm)	Package #
OPF2412T	5 MBd	DC- Coupled Schottky	-40.0	-25.4 / -9.2	TTL or CMOS	100/140	49

Integrated Receiver Part Number	Data Rate	Integrated Receiver Type	Responsivity (mV/µW) Min / Max	Peak Input Power (dbm) Max	Output Type	Fiber Size (µm)	Package #
OPF2416T	125 MBd	DC- Coupled Schottky	5.3 / 9.6	-7.6	Analog	62.5/125	49
OPF2416TC							
OPF2418T	155 MBd						
OPF2418TC							

Package Cube / DIP ST– Panel

Part Number	LED Peak Wavelength	Coupled Power (dbm) 50/125 Cable (Min)	I_F (mA) Typ / Max	Rise / Fall Time (ns)	Fiber Size (µm)	Package #
OPF1412	840 nm	-19.0	60 / 100	6.5 / 6.5	62.5/125	50
OPF1414	840 nm	-15.0	60 / 100	6.5 / 6.5	62.5/125	

Integrated Receiver Part Number	Data Rate	Integrated Receiver Type	Input Power (dbm) Logic High Max	Input Power (dbm) Logic Low Min / Max	Output Type	Fiber Size (µm)	Package #
OPF2412	5 MBd	DC- Coupled Schottky	-40.0	-25.4 / -9.2	TTL or CMOS	100/140	50
OPF2414	25 MBd						

Integrated Receiver Part Number	Data Rate	Integrated Receiver Type	Responsivity (mV/µW) Min / Max	Peak Input Power (dbm) Max	Output Type	Fiber Size (µm)	Package #
OPF2416	125 MBd	DC- Coupled Schottky	5.3 / 9.6	-7.6	Analog	62.5/125	50
OPF2418	155 MBd	DC- Coupled	5.3 / 9.6	-7.6	Analog	100/140	

OptoIsolator / Coupler

Opto-Isolator Package	Part Number	LED Peak Wavelength	Sensor Photologic®	Isolation Voltage (,000)	t_{PLH} / t_{PHL} Max (ns)	I_F (mA) Typ / Max	V_{CE} (V) Max	Lead Length / Spacing	Package #
	OPI1266	890 nm	Open Collector	16	800 / 800	13.5 / 50	7.0	0.12" / 0.98"	55
	OPI1268	850 nm			100 / 200	10 / 50	18		

Opto-Isolator Package	Part Number	LED Peak Wavelength	Sensor	Isolation Voltage (,000)	CTR Min	I_F (mA) Typ / Max	V_{CE} (Volts) Max	Lead Length / Spacing	Package #
	OPI120	890 nm or 935 nm	Transistor	15	20	10 / 50	25	0.40" / 0.75"	57
	OPI120TX								
	OPI120TXV								
	OPI123		Darlington	15	50	10 / 50	20		
	Part Number	**LED Peak Wavelength**	**Sensor Photologic®**	**Isolation Voltage (,000)**	**t_{PLH} / t_{PHL} Typ (ns)**	**I_F (mA) Typ / Max**	**V_{CE} (Volts) Max**	**Lead Length / Spacing**	**Package #**
	OPI125	890 nm or 935 nm	Totem Pole	15	5 / 5	7.5 / 25	35.0	0.40" / 0.75"	57
	OPI125TX								
	OPI125TXV								
	OPI126		Open Collector		5 / 5	7.5 / 25	35.0		
	OPI127		Inv-Totem Pole		5 / 5	7.5 / 25	35.0		
	OPI128		Inv-Open Collector		5 / 5	7.5 / 25	35.0		

Opto-Isolator Package	Part Number	LED Peak Wavelength	Sensor	Isolation Voltage (,000)	CTR Min / Max	I_F (mA) Typ / Max	V_{CE} (Volts) Max	Lead Length / Spacing	Package #
	OPI110	890 nm	Transistor	10	12.5 / NA	10 / 40	30	0.50" / 0.55"	58
	OPI110A				25 / NA				
	OPI110B				50 / 125				
	OPI110C				100 / NA				
	OPI113		Darlington	10	50 / NA	5 / 40	30		
	OPI1264	890 nm	Transistor	10	12.5 / NA	10 / 40	30	0.50" / 0.55"	58
	OPI1264A				25 / NA				
	OPI1264B				50 / 125				
	OPI1264C				100 / NA				
	OPI150	890 nm	Transistor	50	10 / NA	16 / 50	30	0.40" / 3.16"	110
	OPI150TX								
	OPI150TXV								
	OPI153	890 nm or 935 nm	Darlington	50	25 / NA	30 / 50	15		
	OPI155	890 nm	TIA –OC	50	80 / NA	10 / 50	18		

Opto-Isolator Package	Part Number	LED Peak Wavelength	Sensor	Isolation Voltage (,000)	CTR Min	I_F (mA) Typ / Max	V_{CE} (Volts) Max	Lead Length / Spacing	Package #
	OPI7002	890 nm	Transistor	6	20	10 / 50	30	0.30" / 0.30"	56
	OPI7010				100				
	OPI7320	890 nm or 935 nm	Darlington	6	200	5 / 50	15	0.30" / 0.30"	56
	OPI7340				400				

Optoisolator / Coupler Non-Focused and Focused Reflective Switch

Package Cube Reflective

Part Number	LED Peak Wavelength	Sensor	Reflection Distance Inch (mm)	$I_{C(ON)}$ (mA) Min	I_F (mA) Typ / Max	V_{CE} (V) Max	Lead Length / Spacing	Package #
OPB706A	935 nm	Transistor	0.050" (1.27mm)	0.50	20 / 50	30	0.45" / 0.087", 0.100"	62
OPB706B				0.35				
OPB706C				0.20				
OPB707A	935 nm	Darlington	0.050" (1.27mm)	25.00	20 / 50	30	0.45" / 0.087", 0.100"	62
OPB707B				17.00				
OPB707C				10.00				

Package TO-46 Reflective

Part Number	LED Peak Wavelength	Sensor	Reflection Distance Inch (mm)	$I_{C(ON)}$ (mA) Min	I_F (mA) Typ / Max	V_{CE} (V) Max	Lead Length / Spacing	Package #
OPB710	935 nm	Transistor	0.250" (6.35mm)	0.15	20 / 50	30	0.50" DIA	59
OPB710F								
OPB730	935 nm	Darlington	0.250" (6.35mm)	1.00	20 / 50	30	0.50" DIA	59
OPB730F								

Package Mini-Cube Reflective

Part Number	LED Peak Wavelength	Sensor	Reflection Distance Inch (mm)	$I_{C(ON)}$ (mA) Min	I_F (mA) Typ / Max	V_{CE} (V) Max	Lead Length / Spacing	Package #
OPB606A	935 nm	Transistor	0.050" (1.27mm)	0.50	20 / 50	30	0.20" / 0.087", 0.100"	60
OPB606B				0.35				
OPB606C				0.20				
OPB607A	935 nm	Darlington	0.050" (1.27mm)	25.00	20 / 50	30	0.20" / 0.087", 0.100"	60
OPB607B				17.00				
OPB607C				10.00				
OPB608A	890 nm	Rbe Transistor	0.050" (1.27mm)	2.00	20 / 50	30	0.20" / 0.087", 0.100"	60
OPB608B				1.00				
OPB608C				0.50				
OPB608R	660 nm			1.00				
OPB608V*	850 nm			5.00				

Package Flat Reflective

Part Number	LED Peak Wavelength	Sensor	Reflection Distance Inch (mm)	$I_{C(ON)}$ (mA) Min	I_F (mA) Typ / Max	V_{CE} (V) Max	Lead Length / Spacing	Package #
OPB711	890 nm	Transistor	0.080" (2.03mm)	0.35	20 / 50	30	0.30" / 0.095", 0.100"	61
OPB712		Darlington		20.00				

Package Object Reflective

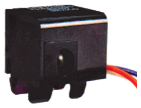

Part Number	LED Peak Wavelength	Sensor Photologic®	Reflection Distance Inch (mm)	I_{CCL} / I_{CCH} (mA) Max	V_{CC} (Volts) Min / Max	Lead Length / Spacing	Package #
OPB715Z	890 nm	Totem-Pole	0.50"	50 / 50	4.75 / 5.25	18" / 26 AWG Wire	64
OPB716Z		Open-Collector					
OPB717Z		Inv-Totem-Pole		50 / 50	4.75 / 5.25		
OPB718Z		Inv-Open-Collector					

Package Object Reflective

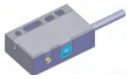

Part Number	LED Peak Wavelength	Sensor Photologic®	Reflection Distance Inch Max.	$I_{C(ON)}$ (mA) Max	V_{CC} (Volts) Min / Max	Lead Length / Spacing	Package #
OPB720-24Z	850 nm	Open-Collector	24"	50	10 / 30	39" / 28 AWG Wire	63

Note : * identifies products that are class 1M Laser Safety—See Application Bulletin 221.

Focused Reflective Switch

Package Object Reflective	Part Number	LED Peak Wavelength	Sensor	Reflection Distance Inch Max.	$I_{C(ON)}$ (mA) Max	I_F (mA) Typ / Max	V_{CE} (Volts) Max	Lead Length / Spacing	Package #
	OPB732	850 nm	Transistor	3.0″	50	20 / 50	30	0.150″	139
	OPB732W							39" / 28 AWG Wire	140

Package Reflective Switch	Part Number	LED Peak Wavelength	Sensor	Reflection Distance Inch (mm)	$I_{C(ON)}$ (mA)Min	I_F (mA) Typ / Max	V_{CE} (Volts) Max	Lead Length / Spacing	Package #
	OPB702	890 nm	Transistor	0.150" (3.81mm)	0.50	20 / 50	30	0.400" / 0.100"	65
	OPB702D		Darlington				15		
	OPB702R		Transistor				30		

Package Reflective Switch	Part Number	LED Peak Wavelength	Sensor	Reflection Distance Inch (mm)	$I_{C(ON)}$ (mA) Min	I_F (mA) Typ / Max	V_{CE} (Volts) Max	Lead Length / Spacing	Package #
	OPB700Z	890 nm	Transistor	0.200" (5.08mm)	0.03	40 / 100	25	4" / 26 AWG	66
	OPB700ALZ							18" / 26 AWG	66
	OPB700TX					40 / 50	50	4" / 26 AWG Wire	66
	OPB700TXV								
	OPB701Z	890 nm	Darlington	0.200" (5.08mm)	2.00	40 /50	15	4" / 26 AWG	66
	OPB701ALZ							18" / 26 AWG	66

Package Reflective Switch	Part Number	LED Peak Wavelength	Sensor	Reflection Distance Inch (mm)	$I_{C(ON)}$ Min (mA)	I_F (mA) Typ / Max	V_{CE} (Volts) Max	Lead Length / Spacing	Package #
	OPB703	890 nm	Transistor	0.150" (3.81mm)	0.20	40 /50	30	0.150"	67
	OPB703WZ							4.5"	68
	OPB704							0.150"	67
	OPB704WZ							4.5"	68
	OPB705				0.10			0.150"	67
	OPB705WZ							4.5"	68

Package Reflective Switch	Part Number	LED Peak Wavelength	Sensor	Reflection Distance Inch (mm)	$I_{C(ON)}$ (mA) Min	I_F (mA) Typ / Max	V_{CE} (Volts) Max	Lead Length / Wire Type	Package #
	OPB708	935 nm	Transistor	0.150" (3.81mm)	0.01	20 / 40	30	0.150"	69
	OPB709				1.00				
	OPB740	890 nm	Transistor	0.150" (3.81mm)	0.05	20 / 40	30	0.150"	69
	OPB741				0.05				
	OPB742				0.01				
	OPB743				0.20				
	OPB744				0.20				
	OPB745	890 nm	Darlington	0.150"	1.00	20 / 40	30	0.150"	69
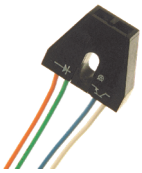	OPB740WZ	890 nm	Transistor	0.150" (3.81mm)	0.05	20 / 40	30	4" / 26 AWG Wire	70
	OPB741WZ				0.05				
	OPB742WZ				0.01				
	OPB743WZ				0.20				
	OPB744WZ				0.20				
	OPB740W24Z	890 nm	Transistor	0.150" (3.81mm)	0.05	20 / 40	30	24" / 26 AWG Wire	70
	OPB741W24Z				0.05				
	OPB742W24Z				0.01				
	OPB743W24Z				0.20				
	OPB744W24Z				0.20				
	OPB745WZ	890 nm	Darlington	0.150" (3.81mm)	1.00	20 / 40	30	4" / 26 AWG	70
	OPB745W24Z							24" / 26AWG	

Focused Reflective Switch

Package Reflective Switch

Part Number	LED Peak Wavelength	Sensor	Reflection Distance Inch	$I_{C(ON)}$ (mA) Min	I_F (mA) Typ / Max	V_{CE} (Volts) Max	Lead Length	Package #
OPB750N	890 nm	Transistor & Rbe	0.080" (2.03mm)	0.500	30 / 50	30	0.40"	71
			0.150" (3.81mm)	0.375				
			0.220" (5.59mm)	0.250				

Part Number	LED Peak Wavelength	Sensor Photologic®	Reflection Distance (Inch) Min / Max	I_{CC} (mA) Max	I_F (mA) Typ / Max	V_{CC} (Volts) Min / Max	Lead Length	Package #
OPB760N	890 nm	Totem-Pole	0.080" / 0.220"	10	25 / 50	4.75 / 5.25	0.40"	72
OPB761N		Open Collector Collector	0.080" / 0.220"					
OPB762N		Inv-Totem-Pole	0.080" / 0.220"					
OPB763N		Inv-Open Collector	0.080" / 0.220"					

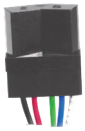

Part Number	LED Peak Wavelength	Sensor	Reflection Distance Inch	$I_{C(ON)}$ (mA) Min	I_F (mA) Typ / Max	V_{CE} (Volts) Max	Lead Length	Package #
OPB755N Z	890 nm	Transistor	0.080" (2.03mm)	0.500	30 / 50	30	12" / 26 AWG Wire	73
			0.150" (3.81mm)	0.375				
			0.220" (5.59mm)	0.250				

Part Number	LED Peak Wavelength	Sensor Photologic®	Reflection Distance (Inch) Min / Max	I_{CC} (mA) Max	I_F (mA) Typ / Max	V_{CC} (Volts) Min / Max	Lead Length	Package #
OPB770NZ	890 nm	Totem-Pole	0.080" / 0.220"	10	25 / 50	4.75 / 5.25	12" / 26 AWG Wire	74
OPB771NZ		Open Collector Collector	0.080" / 0.220"					
OPB772NZ		Inv-Totem-Pole	0.080" / 0.220"					
OPB773NZ		Inv-Open Collector	0.080" / 0.220"					

Package Reflective Switch

Part Number	LED Peak Wavelength	Sensor	Reflection Distance Inch	$I_{C(ON)}$ (mA) Min	I_F (mA) Typ / Max	V_{CE} (Volts) Max	Lead Length	Package #
OPB750T	890 nm	Transistor & Rbe	0.080" (2.03mm)	0.500	30 / 50	30	0.40"	71
			0.150" (3.81mm)	0.375				
			0.220" (5.59mm)	0.250				

Part Number	LED Peak Wavelength	Sensor Photologic®	Reflection Distance (Inch) Min / Max	I_{CC} (mA) Max	I_F (mA) Typ / Max	V_{CC} (Volts) Min / Max	Lead Length	Package #
OPB760T	890 nm	Totem-Pole	0.080" / 0.220"	10	25 / 50	4.75 / 5.25	0.40"	72
OPB761T		Open Collector Collector	0.080" / 0.220"					
OPB762T		Inv-Totem-Pole	0.080" / 0.220"					
OPB763T		Inv-Open Collector	0.080" / 0.220"					

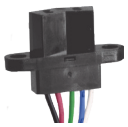

Part Number	LED Peak Wavelength	Sensor	Reflection Distance Inch	$I_{C(ON)}$ (mA) Min	I_F (mA) Typ / Max	V_{CE} (Volts) Max	Lead Length	Package #
OPB755TZ	890 nm	Transistor	0.080" (2.03mm)	0.500	30 / 50	30	12" / 26 AWG Wire	73
			0.150" (3.81mm)	0.375				
			0.220" (5.59mm)	0.250				

Part Number	LED Peak Wavelength	Sensor Photologic®	Reflection Distance (Inch) Min / Max	I_{CC} (mA) Max	I_F (mA) Typ / Max	V_{CC} (Volts) Min / Max	Lead Length	Package #
OPB770TZ	890 nm	Totem-Pole	0.080" / 0.220"	10	25 / 50	4.75 / 5.25	12" / 26 AWG Wire	74
OPB771TZ		Open Collector Collector	0.080" / 0.220"					
OPB772TZ		Inv-Totem-Pole	0.080" / 0.220"					
OPB773TZ		Inv-Open Collector	0.080" / 0.220"					

Slotted Switch Single Tab by LED "L Package"

Package Slotted Switch	Part Number	LED Peak Wavelength	Sensor	Slot Width / Depth	$I_{C(ON)}$ (mA) Min / Max	I_F (mA) Typ / Max	V_{CE} (Volts) Max	Aperture Emitter/Sensor	Lead Length / Spacing	Package #
	OPB355L	890 nm	Diode	0.123" / 0.345"	0.01 / 0.20	20 / 50	30	None	0.425" / 0.320"	77
	OPB360L11	890 nm	Transistor	0.125" / 0.345"	1.0 / 5.0	20 / 50	30	0.01" / 0.01"	0.425" / 0.320"	77
	OPB360L51				2.5 / 10.0			0.05" / 0.01"		
	OPB360L55				3.5 / 14.0			0.05" / 0.05"		
	OPB365L11	890 nm	Transistor	0.125" / 0.345"	1.0 / 5.0	20 / 50	30	0.01" / 0.01"	0.425" / 0.220"	77
	OPB365L51				2.5 / 10.0			0.05" / 0.01"		
	OPB365L55				3.5 / 14.0			0.05" / 0.05"		
	OPB370L11	890 nm	Transistor	0.125" / 0.345"	1.0 / 5.0	20 / 50	30	0.01" / 0.01"	0.425" / 0.320"	77
	OPB370L51				2.5 / 10.0			0.05" / 0.01"		
	OPB370L55				3.5 / 14.0			0.05" / 0.05"		
	OPB375L11	890 nm	Transistor	0.125" / 0.345"	1.0 / 5.0	20 / 50	30	0.01" / 0.01"	0.425" / 0.220"	77
	OPB375L51				2.5 / 10.0			0.05" / 0.01"		
	OPB375L55				3.5 / 14.0			0.05" / 0.05"		
	OPB854A2	890 nm	Transistor	0.100" / 0.250"	3.0 / NA	20 / 50	30	None	0.400" / 0.300"	83
	OPB854B2				1.0 / NA					
	OPB860L11	890 nm	Transistor	0.125" / 0.345"	0.5 / NA	20 / 50	50	0.01" / 0.01"	0.425" / 0.320"	77
	OPB860L51							0.05" / 0.01"		
	OPB860L55							0.05" / 0.05"		
	OPB861L51	890 nm	Transistor	0.125" / 0.345"	1.0 / NA			0.05" / 0.01"		
	OPB861L55							0.05" / 0.01"		
	OPB862L51	890 nm	Transistor	0.125" / 0.345"	1.8 / NA	20 / 50	50	0.05" / 0.01"	0.425" / 0.320"	77
	OPB862L55							0.05" / 0.05"		
	OPB865L11	890 nm	Transistor	0.125" / 0.345"	0.5 / NA	20 / 50	50	0.01" / 0.01"	0.425" / 0.220"	77
	OPB865L51							0.05" / 0.01"		
	OPB865L55							0.05" / 0.05"		
	OPB866L51	890 nm	Transistor	0.125" / 0.345"	1.0 / NA	20 / 50	50	0.05" / 0.01"	0.425" / 0.220"	77
	OPB866L55							0.05" / 0.05"		
	OPB867L51	890 nm	Transistor	0.125" / 0.345"	1.8 / NA	20 / 50	50	0.05" / 0.01"	0.425" / 0.220"	77
	OPB867L55							0.05" / 0.05"		
	OPB870L11	890 nm	Transistor	0.125" / 0.345"	0.5 / NA	20 / 50	50	0.01" / 0.01	0.425" / 0.320"	77
	OPB870L11TX									
	OPB870L11TXV									
	OPB870L51	890 nm	Transistor	0.125" / 0.345"	0.5 / NA	20 / 50	50	0.05" / 0.01"	0.425" / 0.320"	77
	OPB870L51TX									
	OPB870L51TXV									
	OPB870L55	890 nm	Transistor	0.125" / 0.345"	0.5 / NA	20 / 50	50	0.05" / 0.05"	0.425" / 0.320"	77
	OPB870L55TX									
	OPB870L55TXV									
	OPB871L51	890 nm	Transistor	0.125" / 0.345"	1.0 / NA	20 / 50	50	0.05" / 0.01"	0.425" / 0.320"	77
	OPB871L51TX									
	OPB871L51TXV									
	OPB871L55	890 nm	Transistor	0.125" / 0.345"	1.0 / NA	20 / 50	50	0.05" / 0.05"	0.425" / 0.320"	77
	OPB871L55TX									
	OPB871L55TXV									
	OPB872L51	890 nm	Transistor	0.125" / 0.345"	1.8 / NA	20 / 50	50	0.05" / 0.01"	0.425" / 0.320"	77
	OPB872L51TX									
	OPB872L51TXV									

Slotted Switch Single Tab by LED "L Package"

Package Slotted Switch	Part Number	LED Peak Wavelength	Sensor	Slot Width / Depth	$I_{C(ON)}$ (mA) Min / Max	I_F (mA) Typ / Max	V_{CE} (Volts) Max	Aperture Emitter/Sensor	Lead Length / Spacing	Package #
	OPB872L55	890 nm	Transistor	0.125" / 0.345"	1.8 / NA	20 / 50	50	0.05" / 0.05"	0.425" / 0.320"	77
	OPB872L55TX							0.05" / 0.05"		
	OPB872L55TXV							0.05" / 0.05"		
	OPB875L11	890 nm	Transistor	0.125" / 0.345"	0.5 / NA	20 / 50	50	0.01" / 0.01"	0.425" / 0.220"	77
	OPB875L51							0.05" / 0.01"		
	OPB875L55							0.05" / 0.05"		
	OPB876L51	890 nm	Transistor	0.125" / 0.345"	1.0 / NA	20 / 50	50	0.05" / 0.01"	0.425" / 0.220"	77
	OPB876L55							0.05" / 0.05"		
	OPB877L51	890 nm	Transistor	0.125" / 0.345"	1.8 / NA	20 / 50	50	0.05" / 0.01"	0.425" / 0.220"	77
	OPB877L55							0.05" / 0.05"		

Package Slotted Switch	Part Number	LED Peak Wavelength	Sensor	Slot Width / Depth	$I_{C(ON)}$ (mA) Min / Max	I_F (mA) Typ / Max	V_{CE} (Volts) Max	Aperture Emitter/Sensor	Lead Length / Spacing	Package #
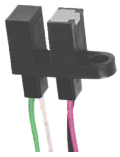	OPB380L11Z	890 nm	Transistor	0.125" / 0.345"	1.0 / 5.0	20 / 50	30	0.01" / 0.01"	24"/26 AWG Wire	79
	OPB380L51Z				2.5 / 10.0			0.05" / 0.01"		
	OPB380L55Z				3.5 / 14.0			0.05" / 0.05"		
	OPB390L11Z	890 nm	Transistor	0.125" / 0.345"	1.0 / 5.0	20 / 50	30	0.01" / 0.01"	24"/26 AWG Wire	79
	OPB390L51Z				2.5 / 10.0			0.05" / 0.01"		
	OPB390L55Z				3.5 / 14.0			0.05" / 0.05"		
	OPB880L11Z	890 nm	Transistor	0.125" / 0.345"	0.5 / NA	20 / 50	50	0.01" / 0.01"	24"/26 AWG Wire	81
	OPB880L51Z							0.05" / 0.01"		
	OPB880L55Z							0.05" / 0.05"		
	OPB881L51Z	890 nm	Transistor	0.125" / 0.345"	1.0 / NA	20 / 50	50	0.05" / 0.01"	24"/26 AWG Wire	81
	OPB881L55Z							0.05" / 0.05"		
	OPB882L51Z	890 nm	Transistor	0.125" / 0.345"	1.8 / NA	20 / 50	50	0.05" / 0.01"	24"/26 AWG Wire	81
	OPB882L55Z							0.05" / 0.05"		
	OPB890L11Z	890 nm	Transistor	0.125" / 0.345"	0.5 / NA	20 / 50	50	0.01" / 0.01"	24"/26 AWG Wire	81
	OPB890L51Z							0.05" / 0.01"		
	OPB890L55Z							0.05" / 0.05"		
	OPB891L51Z	890 nm	Transistor	0.125" / 0.345"	1.0 / NA	20 / 50	50	0.05" / 0.01"	24"/26 AWG Wire	81
	OPB891L55Z							0.05" / 0.05"		
	OPB892L51Z	890 nm	Transistor	0.125"	1.8 / NA	20 / 50	50	0.05" / 0.01"	24"/26 AWG Wire	81
	OPB892L55Z							0.05" / 0.05"		

Package Slotted "L"	Part Number	LED Peak Wavelength	Sensor Photologic®	Slot Width / Depth	I_{CCL} / I_{CCH} (mA) Max	I_F (mA) Typ / Max	V_{CC} (Volts) Min / Max	Aperture Emitter/Sensor	Lead Length / Spacing	Package #
	OPB120A	890 nm	Totem-Pole	0.080" / 0.255"	15 / 15	20 / 50	4.75 / 5.25	0.04" / 0.04"	0.300" / 0.270"	76
	OPB120B							0.04" / 0.01"		
	OPB121A		Open-Collector					0.04" / 0.04"		
	OPB121B							0.04" / 0.01"		
	OPB122A							0.04" / 0.04"		
	OPB122B							0.04" / 0.01"		
	OPB123A							0.04" / 0.04"		
	OPB123B							0.04" / 0.01"		

Slotted Switch Single Tab by LED "L Package"

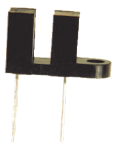

Package Slotted Switch	Part Number	LED Peak Wavelength	Sensor Photologic®	Slot Width / Depth	I_{CCL} / I_{CCH} (mA) Max	I_F (mA) Typ / Max	V_{CC} (Volts) Min / Max	Aperture Emitter/Sensor	Lead Length / Spacing	Package #
	OPB460L11	890 nm	10K Pull-up	0.125" / 0.345"	7.5 / 7.5	20 / 50	4.5 / 16	0.01" / 0.01"	0.425" / 0.320"	78
	OPB461L11		OC							
	OPB462L11		Inv-10K							
	OPB463L11		Inv-OC							
	OPB470L11	890 nm	10K Pull-up	0.125" / 0.345"	7.5 / 7.5	20 / 50	4.5 / 16	0.01" / 0.01"	0.425" / 0.320"	78
	OPB471L11		OC							
	OPB472L11		Inv-10K							
	OPB473L11		Inv-OC							
	OPB960L11	890 nm	Totem-Pole	0.125" / 0.345"	15 / 15	20 / 50	4.75 / 5.25	0.01" / 0.01"	0.425" / 0.320"	78
	OPB960L51							0.05" / 0.01"		
	OPB960L55							0.05" / 0.05"		
	OPB961L11	890 nm	Open-Collector	0.125" / 0.345"	15 / 15	20 / 50	4.75 / 5.25	0.01" / 0.01"	0.425" / 0.320"	78
	OPB961L51							0.05" / 0.01"		
	OPB961L55							0.05" / 0.05"		
	OPB962L11	890 nm	Inv-Totem-Pole	0.125" / 0.345"	15 / 15	20 / 50	4.75 / 5.25	0.01"/ 0.01"	0.425" / 0.320"	78
	OPB962L51							0.05"/ 0.01"		
	OPB962L55							0.05"/ 0.05"		
	OPB963L11	890 nm	Inv-Open-Collector	0.125" / 0.345"	15 / 15	20 / 50	4.75 / 5.25	0.01"/ 0.01"	0.425" / 0.320"	78
	OPB963L51							0.05"/ 0.01"		
	OPB963L55							0.05"/ 0.05"		
	OPB970L11	890 nm	Totem-Pole	0.125" / 0.345"	15 / 15	20 / 50	4.75 / 5.25	0.01"/ 0.01"	0.425" / 0.320"	78
	OPB970L51							0.05"/ 0.01"		
	OPB970L55							0.05"/ 0.05"		
	OPB971L11	890 nm	Open-Collector	0.125" / 0.345"	15 / 15	20 / 50	4.75 / 5.25	0.01"/ 0.01"	0.425" / 0.320"	78
	OPB971L51							0.05"/ 0.01"		
	OPB971L55							0.05"/ 0.05"		
	OPB972L11	890 nm	Inv-Totem-Pole	0.125" / 0.345"	15 / 15	20 / 50	4.75 / 5.25	0.01"/ 0.01"	0.425" / 0.320"	78
	OPB972L51							0.05"/ 0.01"		
	OPB972L55							0.05"/ 0.05"		
	OPB973L11	890 nm	Inv-Open-Collector	0.125" / 0.345"	15 / 15	20 / 50	4.75 / 5.25	0.01"/ 0.01"	0.425" / 0.320"	78
	OPB973L51							0.05"/ 0.01"		
	OPB973L55							0.05"/ 0.05"		

Package Slotted Switch	Part Number	LED Peak Wavelength	Sensor Photologic®	Slot Width / Depth	I_{CCL} / I_{CCH} (mA) Max	I_F (mA) Typ / Max	V_{CC} (Volts) Min / Max	Aperture Emitter/Sensor	Lead Length / Spacing	Package #
	OPB480L11Z	890 nm	10K Pull-up	0.125" / 0.345"	7.5 / 7.5	20 / 50	4 / 16	0.01" / 0.01"	24" / 26 AWG Wire	80
	OPB481L11Z		OC							
	OPB482L11Z		Inv-10K			20 / 50				
	OPB483L11Z		Inv-OC							
	OPB490L11Z	890 nm	10K Pull-up	0.125" / 0.345"	7.5 / 7.5	20 / 50	4 / 16	0.01" / 0.01"	24" / 26 AWG Wire	80
	OPB491L11Z		OC							
	OPB492L11Z		Inv-10K							
	OPB493L11Z		Inv-OC							
	OPB980L11Z	890 nm	Totem-Pole	0.125" / 0.345"	15 / 15	20 / 50	4.75 / 5.25	0.01"/ 0.01"	24" / 26 AWG Wire	82
	OPB980L51Z							0.05"/ 0.01"		
	OPB980L55Z							0.05"/ 0.05"		
	OPB981L11Z	890 nm	Open-Collector	0.125" / 0.345"	15 / 15	20 / 50	4.75 / 5.25	0.01"/ 0.01"	24" / 26 AWG Wire	82
	OPB981L51Z							0.05"/ 0.01"		
	OPB981L55Z							0.05"/ 0.05"		

Slotted Switch Single Tab by LED "L Package"

Package Slotted Switch	Part Number	LED Peak Wavelength	Sensor Photologic®	Slot Width / Depth	I_{CCL} / I_{CCH} (mA) Max	I_F (mA) Typ / Max	V_{CC} (Volts) Min / Max	Aperture Emitter/Sensor	Lead Length / Spacing	Package #
	OPB982L11Z	890 nm	Inv-Totem-Pole	0.125" / 0.345"	15 / 15	20 / 50	4.75 / 5.25	0.01"/ 0.01"	24" / 26 AWG Wire	82
	OPB982L51Z							0.05"/ 0.01"		
	OPB982L55Z							0.05"/ 0.05"		
	OPB983L11Z	890 nm	Inv-Open-Collector	0.125" / 0.345"	15 / 15	20 / 50	4.75 / 5.25	0.01"/ 0.01"	24" / 26 AWG Wire	82
	OPB983L51Z							0.05"/ 0.01"		
	OPB983L55Z							0.05"/ 0.05"		
	OPB990L11Z	890 nm	Totem-Pole	0.125" / 0.345"	15 / 15	20 / 50	4.75 / 5.25	0.01"/ 0.01"	24" / 26 AWG Wire	82
	OPB990L51Z							0.05"/ 0.01"		
	OPB990L55Z							0.05"/ 0.05"		
	OPB991L11Z	890 nm	Open-Collector	0.125" / 0.345"	15 / 15	20 / 50	4.75 / 5.25	0.01"/ 0.01"	24" / 26 AWG Wire	82
	OPB991L51Z							0.05"/ 0.01"		
	OPB991L55Z							0.05"/ 0.05"		
	OPB992L11Z	890 nm	Inv-Totem-Pole	0.125" / 0.345"	15 / 15	20 / 50	4.75 / 5.25	0.01"/ 0.01"	24" / 26 AWG Wire	82
	OPB992L51Z							0.05"/ 0.01"		
	OPB992L55Z							0.05"/ 0.05"		
	OPB993L11Z	890 nm	Inv-Open-Collector	0.125" / 0.345"	15 / 15	20 / 50	4.75 / 5.25	0.01"/ 0.01"	24" / 26 AWG Wire	82
	OPB993L51Z							0.05"/ 0.01"		
	OPB993L55Z							0.05"/ 0.05"		

Package Slotted Switch	Part Number	LED Peak Wavelength	Sensor	Slot Width / Depth	V_{OL} / V_{OH} (Volts)	I_F (mA) Typ / Max	V_{CC} (Volts) Min / Max	Aperture Emitter/Sensor	Lead Length / Spacing	Package #
	OPB950Z	890 nm	Dual TTL	0.200" / 0.350"	0.4 / 2.4	20 / 50	4.75 / 5.25	0.05" / 0.01"	0.25" / N/A	91

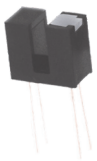

Package Slotted Switch	Part Number	LED Peak Wavelength	Sensor	Slot Width / Depth	$I_{C(ON)}$ (mA) Min / Max	I_F (mA) Typ / Max	V_{CE} (Volts) Max	Aperture Emitter/Sensor	Lead Length / Spacing	Package #
	OPB200	890 nm	Transistor	0.200" / 0.320"	1.0 / 6.0	20 / 50	30	None	0.425" / 0.400	86
	OPB202			0.150" / 0.330"	4.0 / NA					89
	OPB355N	890 nm	Diode	0.123" / 0.345"	0.01 / 0.20	20 / 50	30	None	0.425" / 0.320"	77
	OPB360N11	890 nm	Transistor	0.125" / 0.345"	1.0 / 5.0	20 / 50	30	0.01" / 0.01"	0.425"/ 0.320"	77
	OPB360N51				2.5 / 10.0			0.05" / 0.01"		
	OPB360N55				3.5 / 14.0			0.05" / 0.05"		
	OPB365N11	890 nm	Transistor	0.125" / 0.345"	1.0 / 5.0	20 / 50	30	0.01" / 0.01"	0.425"/ 0.320"	77
	OPB365N51				2.5 / 10.0			0.05" / 0.01"		
	OPB365N55				3.5 / 14.0			0.05" / 0.05"		
	OPB370N11	890 nm	Transistor	0.125" / 0.345"	1.0 / 5.0	20 / 30	50	0.01" / 0.01"	0.425" / 0.320"	77
	OPB370N51				2.5 / 10.0			0.05" / 0.01"		
	OPB370N55				3.5 / 14.0			0.05" / 0.05"		
	OPB375N11	890 nm	Transistor	0.125" / 0.345"	1.0 / 5.0	20 / 30	50	0.01" / 0.01"	0.425" / 0.220"	77
	OPB375N51				2.5 / 10.0			0.05" / 0.01"		
	OPB375N55				3.5 / 14.0			0.05" / 0.05"		

Slotted Switch No Tab "N Package"

Package Slotted Switch	Part Number	LED Peak Wavelength	Dual Sensor	Slot Width / Depth	$I_{C(ON)}$ (mA) Min	I_F (mA) Typ / Max	V_{CE} (Volts) Max	Aperture Emitter/Sensor	Lead Length / Spacing	Package #
	OPB826S	Dual 890 nm	Dual Transistor	0.100" / 0.420"	0.25	20 / 50	30	NA / 0.04"	0.200"/ 0.740"	75
	OPB826SD				0.10			0.04" / 0.04"		

Package Slotted Switch	Part Number	LED Peak Wavelength	Sensor	Slot Width / Depth	$I_{C(ON)}$ (mA) Min / Max	I_F (mA) Typ / Max	V_{CE} (Volts) Max	Aperture Emitter/Sensor	Lead Length / Spacing	Package #
	OPB610	890 nm	Rbe Transistor	0.150" / 0.240"	1.0 / NA	20 / 30	30	None	0.100" / 0.275"	85
	OPB620	890 nm	Rbe Transistor	0.190" / 0.285"	1.0 / NA	20 / 30	30	None	0.100" / 0.320"	88
	OPB621		Diode		0.009 / 0.09	20 / 30	60			
	OPB660N	890 nm	Rbe Transistor	0.125" / 0.345"	0.60 / NA	20 / 30	30	0.05" / 0.01"		92
	OPB804	935 nm	Transistor	0.150" / 0.330"	0.50 / NA	20 / 30	30	None	0.425" / 0.300"	87
	OPB818	890 nm	Transistor	0.200" / 0.250"	0.01 / NA	20 / 30	30	None	0.425" / 0.400"	90
	OPB825	890 nm	Transistor	0.160"/ 0.285"	0.5 / NA	20 / 30	30	None	0.200" / 0.300"	84
	OPB847	890 nm	Transistor	0.100" / 0.250"	4.0 / NA	20 / 30	30	0.025" / 0.025"	0.425" / 0.300"	93
	OPB847TX									
	OPB847TXV									
	OPB848	890 nm	Transistor	0.100" / 0.250"	1.0 / NA	20 / 30	30	N/A	0.425" / 0.300"	93
	OPB848TX									
	OPB848TXV									
	OPB854A1	890 nm	Transistor	0.100" / 0.250"	3.0 / NA	20 / 30	30	None	0.400" / 0.300"	83
	OPB854B1				1.0 / NA					
	OPB855	935 nm	Transistor	0.205" / 0.220"	0.50 / NA	20 / 30	5.0	None	0.120" / 0.380"	103
	OPB860N11	880 nm	Transistor	0.125" / 0.345"	0.5 / NA	20 /50	50	0.01" / 0.01"	0.425" / 0.320"	77
	OPB860N51							0.05" / 0.01"		
	OPB860N55							0.05" / 0.05"		
	OPB861N51	880 nm	Transistor	0.125" / 0.345"	1.0 / NA	20 /50	50	0.05" / 0.01"	0.425" / 0.320"	77
	OPB861N55							0.05" / 0.01"		
	OPB862N51	880 nm	Transistor	0.125" / 0.345"	1.8 / NA	20 /50	50	0.05" / 0.01"	0.425" / 0.320"	77
	OPB862N55							0.05" / 0.01"		
	OPB865N11	880 nm	Transistor	0.125" / 0.345"	0.5 / NA	20 /50	50	0.01" / 0.01"	0.425" / 0.220"	77
	OPB865N51							0.05" / 0.01"		
	OPB865N55							0.05" / 0.05"		
	OPB866N51	890 nm	Transistor	0.125" / 0.345"	1.0 / NA	20 / 50	50	0.05" / 0.01"	0.425"/ 0.220"	77
	OPB866N55							0.05" / 0.05"		
	OPB867N51	890 nm	Transistor	0.125" / 0.345"	1.8 / NA	20 / 50	50	0.05" / 0.01"	0.425"/ 0.220"	77
	OPB867N55							0.05" / 0.05"		
	OPB870N11	890 nm	Transistor	0.125" / 0.345"	0.5 / NA	20 / 50	50	0.01" / 0.01"	0.425"/ 0.320"	77
	OPB870N11TX									
	OPB870N11TXV									

Slotted Switch No Tab "N Package"

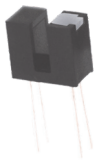

Package Slotted Switch	Part Number	LED Peak Wavelength	Sensor	Slot Width / Depth	$I_{C(ON)}$ (mA) Min / Max	I_F (mA) Typ / Max	V_{CE} (Volts) Max	Aperture Emitter/Sensor	Lead Length / Spacing	Package #
	OPB870N51	890 nm	Transistor	0.125" / 0.345"	0.5 / NA	20 / 50	50	0.05" / 0.01"	0.425"/ 0.320"	77
	OPB870N51TX									
	OPB870N51TXV									
	OPB870N55	890 nm	Transistor	0.125" / 0.345"	0.5 / NA	20 / 50	50	0.05" / 0.05"	0.425"/ 0.320"	77
	OPB870N55TX									
	OPB870N55TXV									
	OPB871N51	890 nm	Transistor	0.125" / 0.345"	1.0 / NA	20 / 50	50	0.05" / 0.01"	0.425"/ 0.320"	77
	OPB871N51TX									
	OPB871N51TXV									
	OPB871N55	890 nm	Transistor	0.125" / 0.345"	1.0 / NA	20 / 50	50	0.05" / 0.05"	0.425"/ 0.320"	77
	OPB871N55TX									
	OPB871N55TXV									
	OPB872N51	890 nm	Transistor	0.125" / 0.345"	1.8 / NA	20 / 50	50	0.05" / 0.01"	0.425"/ 0.320"	77
	OPB872N51TX									
	OPB872N51TXV									
	OPB872N55	890 nm	Transistor	0.125" / 0.345"	1.8 / NA	20 / 50	50	0.05" / 0.05"	0.425"/ 0.320"	77
	OPB872N55TX									
	OPB872N55TXV									
	OPB875N11	890 nm	Transistor	0.125" / 0.345"	0.5 / NA	20 / 50	50	0.01" / 0.01"	0.425"/ 0.220"	77
	OPB875N51							0.05" / 0.01"		
	OPB875N55							0.05" / 0.05"		
	OPB876N51	890 nm	Transistor	0.125" / 0.345"	1.0 / NA	20 / 50	50	0.05" / 0.01"	0.425"/ 0.220"	77
	OPB876N55							0.05" / 0.05"		
	OPB877N51	890 nm	Transistor	0.125" / 0.345"	1.8 / NA	20 / 50	50	0.05" / 0.01"	0.425"/ 0.220"	77
	OPB877N55							0.05" / 0.05"		

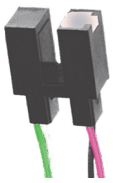

Package Slotted Switch	Part Number	LED Peak Wavelength	Sensor	Slot Width / Depth	$I_{C(ON)}$ (mA) Min / Max	I_F (mA) Typ / Max	V_{CE} (Volts) Max	Aperture Emitter/Sensor	Lead Length / Spacing	Package #
	OPB380N11Z	890 nm	Transistor	0.125" / 0.345"	1.0 / 5.0	20 / 50	30	0.01" / 0.01"	24"/26 AWG Wire	79
	OPB380N51Z				2.5 / 10.0			0.05" / 0.01"		
	OPB380N55Z				3.5 / 14.0			0.05" / 0.05"		
	OPB390N11Z	890 nm	Transistor	0.125" / 0.345"	1.0 / 5.0	20 / 50	30	0.01" / 0.01"	24"/26 AWG Wire	79
	OPB390N51Z				2.5 / 10.0			0.05" / 0.01"		
	OPB390N55Z				3.5 / 14.0			0.05" / 0.05"		
	OPB880N11Z	890 nm	Transistor	0.125" / 0.345"	0.5 / NA	20 / 50	50	0.01" / 0.01"	24"/26 AWG Wire	81
	OPB880N51Z							0.05" / 0.01"		
	OPB880N55Z							0.05" / 0.05"		
	OPB881N51Z	890 nm	Transistor	0.125" / 0.345"	1.0 / NA	20 / 50	50	0.05" / 0.01"	24"/26 AWG Wire	81
	OPB881N55Z							0.05" / 0.05"		
	OPB882N51Z	890 nm	Transistor	0.125" / 0.345"	1.8 / NA	20 / 50	50	0.05" / 0.01"	24"/26 AWG Wire	81
	OPB882N55Z							0.05" / 0.05"		
	OPB890N11Z	890 nm	Transistor	0.125" / 0.345"	0.5 / NA	20 / 50	50	0.01" / 0.01"	24"/26 AWG Wire	81
	OPB890N51Z							0.05" / 0.01"		
	OPB890N55Z							0.05" / 0.05"		
	OPB891N51Z	890 nm	Transistor	0.125" / 0.345"	1.0 / NA	20 / 50	50	0.05" / 0.01"	24"/26 AWG Wire	81
	OPB891N55Z							0.05" / 0.05"		
	OPB892N51Z	890 nm	Transistor	0.125" / 0.345"	1.8 / NA	20 / 50	50	0.05" / 0.01"	24"/26 AWG Wire	81
	OPB892N55Z							0.05" / 0.05"		

Slotted Switch No Tab "N Package"

Package Slotted Switch	Part Number	LED Peak Wavelength	Sensor	Tube Size	$I_{C(ON)}$ Ratio Typ	I_F (mA) Typ / Max	V_{CE} (Volts) Max	Lead Length / Spacing	Package #
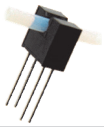	OPB350	890 nm	Transistor	0.125"	1 : 3.0	20 / 50	30	0.330" / 0.320"	95
	OPB350L187			0.188"	1 : 2.3				97
	OPB350L250			0.250"	1 : 2.3				

Package Slotted Switch	Part Number	LED Peak Wavelength	Sensor Photologic®	Slot Width / Depth	$I_{C(ON)}$ (mA) Max	I_F (mA) Typ / Max	V_{CC} (Volts) Min / Max	Aperture Emitter/Sensor	Lead Length / Spacing	Package #
	OPB665N	890 nm	10K Pull-up	0.125" / 0.345"	12	20 / 50	4.5 / 16.0	0.05" / 0.01"	0.100" / 0.320"	98
	OPB666N		Open Collector							
	OPB667N		Inv-10K		12	20 / 50				
	OPB668N		Inv-Open Collector							

Package Slotted Switch	Part Number	LED Peak Wavelength	Sensor Photologic®	Slot Width / Depth	I_{CCL} / I_{CCH} (mA) Max	I_F (mA) Typ / Max	V_{CC} (Volts) Min / Max	Aperture Emitter/Sensor	Lead Length / Spacing	Package #
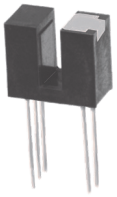	OPB460N11	890 nm	10K Pull-up	0.125" / 0.345"	7.5 / 7.5	20 / 50	4.5 / 16.0	0.01" / 0.01"	0.425" / 0.320"	78
	OPB461N11		Open Collector							
	OPB462N11		Inv-10K			20 / 50				
	OPB463N11		Inv-Open Collector							
	OPB470N11	890 nm	10K Pull-up	0.125" / 0.345"	7.5 / 7.5	20 / 50	4.5 / 16.0	0.01" / 0.01"	0.425" / 0.320"	78
	OPB471N11		Open Collector							
	OPB472N11		Inv-10K			20 / 50				
	OPB473N11		Inv-Open Collector							

Package Slotted Switch	Part Number	LED Peak Wavelength	Sensor Photologic®	Slot Width / Depth	$I_{C(ON)}$ (mA) Max	I_F (mA) Typ / Max	V_{CC} (Volts) Min / Max	Aperture Emitter/Sensor	Lead Length / Spacing	Package #
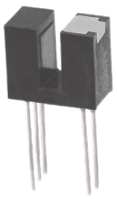	OPB615	890 nm	10K Pull-up	0.150" / 0.240"	12	20 / 50	4.5 / 16.0	None	0.100" / 0.275"	99
	OPB616		Open Collector							
	OPB617		Inv-10K							
	OPB618		Inv-Open Collector							
	OPB625	890 nm	10K Pull-up	0.190" / 0.285"	12	20 / 50	4.5 / 16.0	None	0.100" / 0.320"	100
	OPB626		Open Collector							
	OPB627		Inv-10K							
	OPB628		Inv-Open Collector							
	OPB960N11	890 nm	Totem-Pole	0.125" / 0.345"	15	20 / 50	4.75 / 5.25	0.01" / 0.01"	0.425" / 0.320"	78
	OPB960N51							0.05" / 0.01"		
	OPB960N55							0.05" / 0.05"		
	OPB961N11	890 nm	Open-Collector	0.125" / 0.345"	15	20 / 50	4.75 / 5.25	0.01" / 0.01"	0.425" / 0.320"	78
	OPB961N51							0.05" / 0.01"		
	OPB961N55							0.05" / 0.05"		

Slotted Switch No Tab "N Package Fluid Sensor

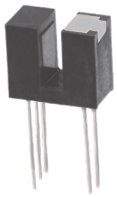

Package Slotted Switch	Part Number	LED Peak Wavelength	Sensor Photologic®	Slot Width / Depth	$I_{C(ON)}$ (mA) Max	I_F (mA) Typ / Max	V_{CC} (Volts) Min / Max	Aperture Emitter/Sensor	Lead Length / Spacing	Package #
	OPB962N11	890 nm	Inv-Totem-Pole	0.125" / 0.345"	15	20 / 50	4.75 / 5.25	0.01" / 0.01"	0.425" / 0.320"	78
	OPB962N51							0.05" / 0.01"		
	OPB962N55							0.05" / 0.05"		
	OPB963N11	890 nm	Inv-Open-Collector	0.125" / 0.345"	15	20 / 50	4.75 / 5.25	0.01" / 0.01"	0.425" / 0.320"	78
	OPB963N51							0.05" / 0.01"		
	OPB963N55							0.05" / 0.05"		
	OPB970N11	890 nm	Totem-Pole	0.125" / 0.345"	15	20 / 50	4.75 / 5.25	0.01" / 0.01"	0.425" / 0.320	78
	OPB970N51							0.05" / 0.01"		
	OPB970N55							0.05" / 0.05"		
	OPB971N11	890 nm	Open-Collector	0.125" / 0.345"	15	20 / 50	4.75 / 5.25	0.01" / 0.01"	0.425" / 0.320	78
	OPB971N51							0.05" / 0.01"		
	OPB971N55							0.05" / 0.05"		
	OPB972N11	890 nm	Inv-Totem-Pole	0.125" / 0.345"	15	20 / 50	4.75 / 5.25	0.01" / 0.01"	0.425" / 0.320	78
	OPB972N51							0.05" / 0.01"		
	OPB972N55							0.05" / 0.05"		
	OPB973N11	890 nm	Inv-Open-Collector	0.125" / 0.345"	15	20 / 50	4.75 / 5.25	0.01" / 0.01"	0.425" / 0.320	78
	OPB973N51							0.05" / 0.01"		
	OPB973N55							0.05" / 0.05"		

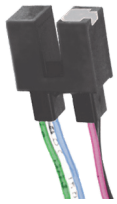

Package Slotted Switch	Part Number	LED Peak Wavelength	Sensor Photologic®	Slot Width / Depth	$I_{C(ON)}$ (mA) Max	I_F (mA) Typ / Max	V_{CC} (Volts) Min / Max	Aperture Emitter/Sensor	Lead Length / Spacing	Package #
	OPB480N11Z	890 nm	10K Pull-up	0.125" / 0.345"	7.5	20 / 50	4.5 / 16.0	0.01" / 0.01"	24" / 26 AWG Wire	80
	OPB481N11Z		Open Collector							
	OPB482N11Z		Inv-10K							
	OPB483N11Z		Inv-Open Collector							
	OPB490N11Z	890 nm	10K Pull-up	0.125" / 0.345"	7.5	20 / 50	4.5 / 16.0	0.01" / 0.01"	24" / 26 AWG Wire	80
	OPB491N11Z		Open Collector							
	OPB492N11Z		Inv-10K							
	OPB493N11Z		Inv-Open Collector							
	OPB980N11Z	890 nm	Totem-Pole	0.125" / 0.345"	15 / 15	20 / 50	4.75 / 5.25	0.01" / 0.01"	24" / 26 AWG Wire	82
	OPB980N51Z							0.05" / 0.01"		
	OPB980N55Z							0.05" / 0.05"		
	OPB981N11Z	890 nm	Open-Collector	0.125" / 0.345"	15 / 15	20 / 50	4.75 / 5.25	0.01" / 0.01"	24" / 26 AWG Wire	82
	OPB981N51Z							0.05" / 0.01"		
	OPB981N55Z							0.05" / 0.05"		
	OPB982N11Z	890 nm	Inv-Totem-Pole	0.125" / 0.345"	15 / 15	20 / 50	4.75 / 5.25	0.01" / 0.01"	24" / 26 AWG Wire	82
	OPB982N51Z							0.05" / 0.01"		
	OPB982N55Z							0.05" / 0.05"		
	OPB983N11Z	890 nm	Inv-Open-Collector	0.125" / 0.345"	15 / 15	20 / 50	4.75 / 5.25	0.01" / 0.01"	24" / 26 AWG Wire	82
	OPB983N51Z							0.05" / 0.01"		
	OPB983N55Z							0.05" / 0.05"		

Slotted Switch No Tab "N Package" Slotted Switch Single Tab by Photosensor "P Package"

Package Slotted Switch

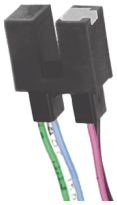

Part Number	LED Peak Wavelength	Sensor Photologic®	Slot Width / Depth	I_{CCL} / I_{CCH} (mA) Max	I_F (mA) Typ / Max	V_{CC} (Volts) Min / Max	Aperture Emitter/Sensor	Lead Length / Spacing	Package #
OPB990N11Z	890 nm	Totem-Pole	0.125" / 0.345"	15 / 15	20 / 50	4.75 / 5.25	0.01" / 0.01"	24" / 26 AWG Wire	82
OPB990N51Z							0.05" / 0.01"		
OPB990N55Z							0.05" / 0.05"		
OPB991N11Z	890 nm	Open-Collector	0.125" / 0.345"	15 / 15	20 / 50	4.75 / 5.25	0.01" / 0.01"	24" / 26 AWG Wire	82
OPB991N51 Z							0.05" / 0.01"		
OPB991N55Z							0.05" / 0.05"		
OPB992N11Z	890 nm	Inv-Totem-Pole	0.125" / 0.345"	15 / 15	20 / 50	4.75 / 5.25	0.01" / 0.01"	24" / 26 AWG Wire	82
OPB992N51Z							0.05" / 0.01"		
OPB992N55Z							0.05" / 0.05"		
OPB993N11Z	890 nm	Inv-Open-Collector	0.125" / 0.345"	15 / 15	20 / 50	4.75 / 5.25	0.01" / 0.01"	24" / 26 AWG Wire	82
OPB993N51Z							0.05" / 0.01"		
OPB993N55Z							0.05" / 0.05"		

Package Slotted Switch

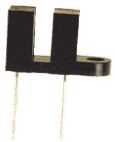

Part Number	LED Peak Wavelength	Sensor	Slot Width / Depth	$I_{C(ON)}$ (mA) Min / Max	I_F (mA) Typ / Max	V_{CE} (Volts) Max	Aperture Emitter/Sensor	Lead Length / Spacing	Package #
OPB355P	890 nm	Diode	0.123" / 0.345"	0.01 / 0.20	20 / 50	30	None	0.425" / 0.320"	77
OPB360P11	890 nm	Transistor	0.125" / 0.345"	1.0 / 5.0	20 / 50	30	0.01"/ 0.01"	0.425" / 0.320"	77
OPB360P51				2.5 / 10.0			0.05"/ 0.01"		
OPB360P55				3.5 / 14.0			0.05"/ 0.05"		
OPB365P11	890 nm	Transistor	0.125" / 0.345"	1.0 / 5.0	20 / 50	30	0.01"/ 0.01"	0.425" / 0.220"	77
OPB365P51				2.5 / 10.0			0.05"/ 0.01"		
OPB365P55				3.5 / 14.0			0.05"/ 0.05"		
OPB370P11	890 nm	Transistor	0.125" / 0.345"	1.0 / 5.0	20 / 50	30	0.01"/ 0.01"	0.425" / 0.320"	77
OPB370P51				2.5 / 10.0			0.05"/ 0.01"		
OPB370P55				3.5 / 14.0			0.05"/ 0.05"		
OPB375P11	890 nm	Transistor	0.125" / 0.345"	1.0 / 5.0	20 / 50	30	0.01"/ 0.01"	0.425" / 0.220"	77
OPB375P51				2.5 / 10.0			0.05"/ 0.01"		
OPB375P55				3.5 / 14.0			0.05"/ 0.05"		
OPB820	890 nm	Transistor	0.080" / 0.255"	0.50 / NA	20 / 50	30	0.04"/ 0.04"	0.425" / 0.275"	94
OPB820S10				0.40 / NA			0.04"/ 0.01"		
OPB820S5				0.30 / NA			0.04"/ 0.005"		
OPB820S3				0.06 / NA			0.04"/ 0.003"		
OPB825A	890 nm	Transistor	0.160"/ 0.280"	0.50 / NA	20 / 50	30	None	0.200" / 0.300"	84
OPB860P11	890 nm	Transistor	0.125" / 0.345"	0.5 / NA	20 / 50	50	0.01"/ 0.01"	0.425" / 0.320"	77
OPB860P51							0.05"/ 0.01"		
OPB860P55							0.05"/ 0.05"		
OPB861P51	890 nm	Transistor	0.125" / 0.345"	1.0 / NA	20 / 50	50	0.05"/ 0.01"	0.425" / 0.320"	77
OPB861P55							0.05"/ 0.05"		
OPB862P51	890 nm	Transistor	0.125" / 0.345"	1.8 / NA	20 / 50	50	0.05"/ 0.01"	0.425" / 0.320"	77
OPB862P55							0.05"/ 0.05"		
OPB865P11	890 nm	Transistor	0.125" / 0.345"	0.5 / NA	20 / 50	50	0.01"/ 0.01"	0.425" / 0.220"	77
OPB865P51							0.05"/ 0.01"		
OPB865P55							0.05"/ 0.05"		

Slotted Switch Single Tab by Photosensor "P Package"

Package Slotted Switch	Part Number	LED Peak Wavelength	Sensor	Slot Width / Depth	$I_{C(ON)}$ (mA) Min / Max	I_F (mA) Typ / Max	V_{CE} (Volts) Max	Aperture Emitter/Sensor	Lead Length / Spacing	Package #
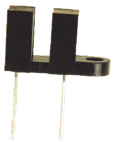	OPB866P11	890 nm	Transistor	0.125" / 0.345"	1.0 / NA	20 / 50	50	0.01"/ 0.01"	0.425" / 0.220"	77
	OPB866P51							0.05"/ 0.01"		
	OPB866P55							0.05"/ 0.05"		
	OPB867P11	890 nm	Transistor	0.125" / 0.345"	1.8 / NA	20 / 50	50	0.01"/ 0.01"	0.425" / 0.220"	77
	OPB867P51							0.05"/ 0.01"		
	OPB867P55							0.05"/ 0.05"		
	OPB870P11	890 nm	Transistor	0.125" / 0.345"	0.5 / NA	20 / 50	50	0.01"/ 0.01"	0.425" / 0.320"	77
	OPB870P11TX									
	OPB870P11TXV									
	OPB870P51	890 nm	Transistor	0.125" / 0.345"	0.5 / NA	20 / 50	50	0.05"/ 0.01"	0.425" / 0.320"	77
	OPB870P51TX									
	OPB870P51TXV									
	OPB870P55	890 nm	Transistor	0.125" / 0.345"	0.5 / NA	20 / 50	50	0.05"/ 0.05"	0.425" / 0.320"	77
	OPB870P55TX									
	OPB870P55TXV									
	OPB871P51	890 nm	Transistor	0.125" / 0.345"	1.0 / NA	20 / 50	50	0.05"/ 0.01"	0.425" / 0.320"	77
	OPB871P51TX									
	OPB871P51TXV									
	OPB871P55	890 nm	Transistor	0.125" / 0.345"	1.0 / NA	20 / 50	50	0.05"/ 0.05"	0.425" / 0.320"	77
	OPB871P55TX									
	OPB871P55TXV									
	OPB872P51	890 nm	Transistor	0.125" / 0.345"	1.8 / NA	20 / 50	50	0.01"/ 0.01"	0.425" / 0.320"	77
	OPB872P51TX									
	OPB872P51TXV									
	OPB872P55	890 nm	Transistor	0.125" / 0.345"	1.8 / NA	20 / 50	50	0.05"/ 0.05"	0.425" / 0.320"	77
	OPB872P55TX									
	OPB872P55TXV									
	OPB875P11	890 nm	Transistor	0.125" / 0.345"	0.5 / NA	20 / 50	50	0.01"/ 0.01"	0.425" / 0.220"	77
	OPB875P51							0.05"/ 0.01"		
	OPB875P55							0.05"/ 0.05"		
	OPB876P51	890 nm	Transistor	0.12" / 0.345"	1.0 / NA	20 / 50	50	0.05"/ 0.01"	0.425" / 0.220"	77
	OPB876P55							0.05"/ 0.05"		
	OPB877P51	890 nm	Transistor	0.125" / 0.345"	1.8 / NA	20 / 50	50	0.05"/ 0.01"	0.425" / 0.220"	77
	OPB877P55							0.05"/ 0.05"		

Package Slotted Switch	Part Number	LED Peak Wavelength	Sensor	Slot Width / Depth	$I_{C(ON)}$ (mA) Min / Max	I_F (mA) Typ / Max	V_{CE} (Volts) Max	Aperture Emitter/Sensor	Lead Length / Spacing	Package #
	OPB885Z	890nm	Transistor	0.375" / 0.595"	1.3 / 8.0	20 / 50	30	0.05" / 0.05"	24"/26 AWG Wire	141

Slotted Switch Single Tab by Photosensor "P Package"

Package Slotted Switch	Part Number	LED Peak Wavelength	Sensor	Slot Width / Depth	$I_{C(ON)}$ (mA) Min / Max	I_F (mA) Typ / Max	V_{CE} (Volts) Max	Aperture Emitter/Sensor	Lead Length / Spacing	Package #
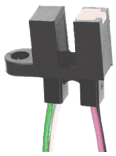	OPB380P11Z	890 nm	Transistor	0.125" / 0.345"	1.0 / 5.0	20 / 50	30	0.01"/ 0.01"	24"/26 AWG Wire	79
	OPB380P51Z							0.05"/ 0.01"		
	OPB380P55Z							0.05"/ 0.05"		
	OPB390P11Z	890 nm	Transistor	0.125" / 0.345"	1.0 / 5.0	20 / 50	30	0.01"/ 0.01"	24"/26 AWG Wire	79
	OPB390P51Z							0.05"/ 0.01"		
	OPB390P55Z							0.05"/ 0.05"		
	OPB880P11Z	890 nm	Transistor	0.125" / 0.345"	0.5 / NA	20 / 50	30	0.01"/ 0.01"	24"/26 AWG Wire	81
	OPB880P51Z							0.05"/ 0.01"		
	OPB880P55Z							0.05"/ 0.05"		
	OPB881P51Z	890 nm	Transistor	0.125" / 0.345"	1.0 / NA	20 / 50	30	0.05"/ 0.01"	24"/26 AWG Wire	81
	OPB881P55Z							0.05"/ 0.05"		
	OPB882P51Z	890 nm	Transistor	0.125" / 0.345"	1.8/NA	20 / 50	30	0.05"/ 0.01"	24"/26 AWG Wire	81
	OPB882P55Z							0.05"/ 0.05"		
	OPB890P11Z	890 nm	Transistor	0.125" / 0.345"	0.5/NA	20 / 50	30	0.01"/ 0.01"	24"/26 AWG Wire	81
	OPB890P51Z							0.05"/ 0.01"		
	OPB890P55Z							0.05"/ 0.05"		
	OPB891P51Z	890 nm	Transistor	0.125" / 0.345"	1.0/NA	20 / 50	30	0.05"/ 0.01"	24"/26 AWG Wire	81
	OPB891P55Z							0.05"/ 0.05"		
	OPB892P51Z	890 nm	Transistor	0.125" / 0.345"	1.8/NA	20 / 50	30	0.05"/ 0.01"	24"/26 AWG Wire	81
	OPB892P55Z							0.05"/ 0.05"		

Package Slotted Switch	Part Number	LED Peak Wave-length	Sensor	Slot Width / Depth	$I_{C(ON)}$ (mA) Min	I_F (mA) Typ / Max	V_{CE} (Volts) Max	Aperture Emitter/Sensor	Lead Length / Spacing	Package #
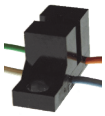	OPB821Z	880 nm	Transistor	0.080" / 0.255"	0.50	20 / 50	30	0.040"/ 0.040"	4.5"/26 AWG Wire	101
	OPB821S10Z				0.40			0.040"/ 0.010"		
	OPB821S5Z				0.30			0.040"/ 0.005"		
	OPB821S3Z				0.06			0.040"/ 0.003"		
	OPB821TX				0.80			0.040"/ 0.040"	24"/26 AWG Wire	101
	OPB821TXV									

Package Slotted Switch	Part Number	LED Peak Wavelength	Sensor Photologic®	Slot Width / Depth	I_{CCL} / I_{CCH} (mA) Max	I_F (mA) Typ / Max	V_{CC} (Volts) Min / Max	Aperture Emitter/Sensor	Lead Length / Spacing	Package #
	OPB460P11	890 nm	10K Pull-up	0.125" / 0.345"	7.5 / 7.5	20 / 50	4.5 / 16.0	0.01"/ 0.01"	0.425" / 0.320"	78
	OPB461P11		OC							
	OPB462P11		Inv-10K							
	OPB463P11		Inv-OC							
	OPB470P11	890 nm	10K Pull-up	0.125" / 0.345"	7.5 / 7.5	20 / 50	4.5 / 16.0	0.01"/ 0.01"	0.425" / 0.320"	78
	OPB471P11		OC							
	OPB472P11		Inv-10K							
	OPB473P11		Inv-OC							
	OPB960P11	890 nm	Totem-Pole	0.125" / 0.345"	15 / 15	20 / 50	4.75 / 5.25	0.01"/ 0.01"	0.425" / 0.320"	78
	OPB960P51							0.05"/ 0.01"		
	OPB960P55							0.05"/ 0.05"		

Slotted Switch Single Tab by Photosensor "P Package"

Package Slotted Switch	Part Number	LED Peak Wavelength	Sensor Photologic®	Slot Width / Depth	I_{CCL} / I_{CCH} (mA) Max	I_F (mA) Typ / Max	V_{CC} (Volts) Min / Max	Aperture Emitter/Sensor	Lead Length / Spacing	Package #
	OPB961P11	890 nm	Open-Collector	0.125" / 0.345"	15 / 15	20 / 50	4.75 / 5.25	0.01"/ 0.01"	0.425" / 0.320"	78
	OPB961P51							0.05"/ 0.01"		
	OPB961P55							0.05"/ 0.05"		
	OPB962P11	890 nm	Inv-Totem-Pole	0.125" / 0.345"	15 / 15	20 / 50	4.75 / 5.25	0.01"/ 0.01"	0.425" / 0.320"	78
	OPB962P51							0.05"/ 0.01"		
	OPB962P55							0.05"/ 0.05"		
	OPB963P11	890 nm	Inv-Open-Collector	0.125" / 0.345"	15 / 15	20 / 50	4.75 / 5.25	0.01"/ 0.01"	0.425" / 0.320"	78
	OPB963P51							0.05"/ 0.01"		
	OPB963P55							0.05"/ 0.05"		
	OPB970P11	890 nm	Totem-Pole	0.125" / 0.345"	15 / 15	20 / 50	4.75 / 5.25	0.01"/ 0.01"	0.425" / 0.320"	78
	OPB970P51							0.05"/ 0.01"		
	OPB970P55							0.05"/ 0.05"		
	OPB971P11	890 nm	Open-Collector	0.125" / 0.345"	15 / 15	20 / 50	4.75 / 5.25	0.01"/ 0.01"	0.425" / 0.320"	78
	OPB971P51							0.05"/ 0.01"		
	OPB971P55							0.05"/ 0.05"		
	OPB972P11	890 nm	Inv-Totem-Pole	0.125" / 0.345"	15 / 15	20 / 50	4.75 / 5.25	0.01"/ 0.01"	0.425" / 0.320"	78
	OPB972P51							0.05"/ 0.01"		
	OPB972P55							0.05"/ 0.05"		
	OPB973P11	890 nm	Inv-Open-Collector	0.125" / 0.345"	15 / 15	20 / 50	4.75 / 5.25	0.01"/ 0.01"	0.425" / 0.320"	78
	OPB973P51							0.05"/ 0.01"		
	OPB973P55							0.05"/ 0.05"		

Package Slotted Switch	Part Number	LED Peak Wavelength	Sensor Photologic®	Slot Width / Depth	I_{CCL} / I_{CCH} (mA) Max	I_F (mA) Typ / Max	V_{CC} (Volts) Min / Max	Aperture Emitter/Sensor	Lead Length / Spacing	Package #
	OPB480P11Z	890 nm	10K Pull-up	0.125" / 0.345"	7.5 / 7.5	20 / 50	4.5 / 16.0	0.01"/ 0.01"	24" / 26 AWG Wire	80
	OPB481P11Z		OC							
	OPB482P11Z		Inv-10K							
	OPB483P11Z		Inv-OC							
	OPB490P11Z	890 nm	10K Pull-up	0.125" / 0.345"	7.5 / 7.5	20 / 50	4.5 / 16.0	0.01"/ 0.01"	24" / 26 AWG Wire	80
	OPB491P11Z		OC							
	OPB492P11Z		Inv-10K							
	OPB493P11Z		Inv-OC							
	OPB980P11Z	890 nm	Totem-Pole	0.125" / 0.345"	15 / 15	20 / 50	4.75 / 5.25	0.01"/ 0.01"	24" / 26 AWG Wire	82
	OPB980P51Z							0.05"/ 0.01"		
	OPB980P55Z							0.05"/ 0.05"		
	OPB981P11Z	890 nm	Open-Collector	0.125" / 0.345"	15 / 15	20 / 50	4.75 / 5.25	0.01"/ 0.01"	24" / 26 AWG Wire	82
	OPB981P51Z							0.05"/ 0.01"		
	OPB981P55Z							0.05"/ 0.05"		
	OPB982P11Z	890 nm	Inv-Totem-Pole	0.125" / 0.345"	15 / 15	20 / 50	4.75 / 5.25	0.01"/ 0.01"	24" / 26 AWG Wire	82
	OPB982P51Z							0.05"/ 0.01"		
	OPB982P55Z							0.05"/ 0.05"		
	OPB983P11Z	890 nm	Inv-Open-Collector	0.125" / 0.345"	15 / 15	20 / 50	4.75 / 5.25	0.01"/ 0.01"	24" / 26 AWG Wire	82
	OPB983P51Z							0.05"/ 0.01"		
	OPB983P55Z							0.05"/ 0.05"		
	OPB990P11Z	890 nm	Totem-Pole	0.125" / 0.345"	15 / 15	20 / 50	4.75 / 5.25	0.01"/ 0.01"	24" / 26 AWG Wire	82
	OPB990P51Z							0.05"/ 0.01"		
	OPB990P55Z							0.05"/ 0.05"		

Slotted Switch Single Tab by Photosensor "P Package"

Package Slotted Switch	Part Number	LED Peak Wavelength	Sensor Photologic®	Slot Width / Depth	I_{CCL} / I_{CCH} (mA) Max	I_F (mA) Typ / Max	V_{CC} (Volts) Min / Max	Aperture Emitter/Sensor	Lead Length / Spacing	Package #
	OPB991P11Z	890 nm	Open-Collector	0.125" / 0.345"	15 / 15	20 / 50	4.75 / 5.25	0.01"/ 0.01"	24" / 26 AWG Wire	82
	OPB991P51Z							0.05"/ 0.01"		
	OPB991P55Z							0.05"/ 0.05"		
	OPB992P11Z	890 nm	Inv-Totem-Pole	0.125" / 0.345"	15 / 15	20 / 50	4.75 / 5.25	0.01"/ 0.01"	24" / 26 AWG Wire	82
	OPB992P51Z							0.05"/ 0.01"		
	OPB992P55Z							0.05"/ 0.05"		
	OPB993P11Z	890 nm	Inv-Open-Collector	0.125" / 0.345"	15 / 15	20 / 50	4.75 / 5.25	0.01"/ 0.01"	24" / 26 AWG Wire	82
	OPB993P51Z							0.05"/ 0.01"		
	OPB993P55Z							0.05"/ 0.05"		

Package Slotted Switch	Part Number	LED Peak Wavelength	Sensor	Slot Width / Depth	$I_{C(ON)}$ (mA) Min	I_F (mA) Typ / Max	V_{CE} (Volts) Max	Aperture Emitter/Sensor	Lead Length	Package #
	OPB806	935 nm	Transistor	0.125" / 0.375"	0.4	20 / 50	30	None	0.500"	102

Package Slotted Switch	Part Number	LED Peak Wavelength	Sensor	Slot Width / Depth	$I_{C(ON)}$ (mA) Min / Max	I_F (mA) Typ / Max	V_{CE} (Volts) Max	Aperture Emitter/Sensor	Lead Length / Spacing	Package #
	OPB355T	890 nm	Diode	0.123" /	0.01 / 0.20	20 / 50	30	None	0.425" /	77
	OPB360T11	890 nm	Transistor	0.125" / 0.345"	1.0 / 5.0	20 / 50	30	0.01" / 0.01"	0.425" / 0.320"	77
	OPB360T51				2.5 / 10.0			0.05" / 0.01"		
	OPB360T55				3.5 / 14.0			0.05" / 0.05"		
	OPB365T11	890 nm	Transistor	0.125" / 0.345"	1.0 / 5.0	20 / 50	30	0.01" / 0.01"	0.425" / 0.220"	77
	OPB365T51				2.5 / 10.0			0.05" / 0.01"		
	OPB365T55				3.5 / 14.0			0.05" / 0.05"		
	OPB370T11	890 nm	Transistor	0.125" / 0.345"	1.0 / 5.0	20 / 50	30	0.01" / 0.01"	0.425" / 0.320"	77
	OPB370T51				2.5 / 10.0			0.05" / 0.01"		
	OPB370T55				3.5 / 14.0			0.05" / 0.05"		
	OPB375T11	890 nm	Transistor	0.125" / 0.345"	1.0 / 5.0	20 / 50	30	0.01" / 0.01"	0.425" / 0.220"	77
	OPB375T51				2.5 / 10.0			0.05" / 0.01"		
	OPB375T55				3.5 / 14.0			0.05" / 0.05"		
	OPB660T	890 nm	Transistor	0.125" /	0.60 / NA	10 / 50	30	0.05" / 0.01"	0.100" /	92
	OPB800L51	890 nm	Transistor	0.375" / 0.350"	0.05 / NA	20 / 50	30	0.05" / 0.01"	0.425" / 0.570"	109
	OPB800L55							0.05" / 0.05"		
	OPB801L55				1.0 / NA	10 / 50				109
	OPB802L55				1.8 / NA	20 /50				109
	OPB810L51	890 nm	Transistor	0.375" / 0.350"	0.05 / NA	20 / 50	30	0.05" / 0.01"	0.425" / 0.570"	109
	OPB810L55							0.05" / 0.05"		
	OPB811L55				1.0 / NA					109
	OPB812L55				1.8 / NA					

Slotted Switch Tab Both Sides "T Package"

Package Slotted Switch	Part Number	LED Peak Wavelength	Sensor	Slot Width/ Depth	$I_{C(ON)}$ (mA) Min / Max	I_F (mA) Typ / Max	V_{CE} (Volts) Max	Aperture Emitter/Sensor	Lead Length / Spacing	Package #
	OPB815L	890 nm	Transistor	0.375" /	1.8 / NA	20 / 50	30	None	0.100" /	104
	OPB825B	890 nm	Transistor	0.160" /	0.5 / NA	20 / 50	30	None	0.200" /	84
	OPB827A	890 nm	Transistor	0.120" / 0.315"	1.8 / NA	20 / 50	30	None	0.425" / 0.300"	105
	OPB827B							None / 0.01"		
	OPB827C							None / 0.06"		
	OPB827D							None / 0.01"		
	OPB828A	890 nm	Transistor	0.120" / 0.315"	1.8 / NA	20 / 50	30	None	0.425" / 0.220"	105
	OPB828B							None / 0.01"		
	OPB828C							None / 0.06"		
	OPB828D							None / 0.01"		
	OPB852A1	890 nm	Transistor	0.120" / 0.315"	1.0 / NA	20 / 50	30	0.05" / 0.01"	0.425" / 0.290"	106
	OPB852A2				2.0 / NA					
	OPB852A3				4.0 / NA					
	OPB853A1	890 nm	Darlington	0.120" / 0.315"	1.0 / NA	20 / 50	30	0.05" / 0.01"	0.425" / 0.290"	106
	OPB853A2				2.0 / NA					
	OPB853A3				4.0 / NA					
	OPB854A3	890 nm	Transistor	0.100" / 0.250"	3.0 / NA	16 / 50	30	None	0.400" / 0.300"	83
	OPB854B3				1.0 / NA					
	OPB859	890 nm	Transistor	0.120" /	0.25 / NA	20 / 50	30	0.50" / 0.50"	0.425" /	107
	OPB860T11	890 nm	Transistor	0.125" / 0.315"	0.5 / NA	20 / 50	50	0.01" / 0.01"	0.425" / 0.320"	77
	OPB860T51							0.05" / 0.01"		
	OPB860T55							0.05" / 0.05"		
	OPB861T51	890 nm	Transistor	0.125" / 0.315"	1.0 / NA	10 / 50	50	0.01" / 0.01"	0.425" / 0.320"	77
	OPB861T55							0.05" / 0.01"		
	OPB862T51	890 nm	Transistor	0.125" / 0.345"	1.8 / NA	20 / 50	50	0.01" / 0.01"	0.425" / 0.320"	77
	OPB862T55							0.05" / 0.01"		
	OPB865T11	890 nm	Transistor	0.125" / 0.345"	0.5 / NA	20 / 50	50	0.01" / 0.01"	0.425" / 0.220"	77
	OPB865T51							0.05" / 0.01"		
	OPB865T55							0.05" / 0.05"		
	OPB866T51	890 nm	Transistor	0.125" / 0.345"	1.0 / NA	10 / 50	50	0.05" / 0.01"	0.425" / 0.220"	77
	OPB866T55							0.05" / 0.05"		
	OPB867T51	890 nm	Transistor	0.125" / 0.345"	1.8 / NA	20 / 50	50	0.05" / 0.01"	0.425" / 0.220"	77
	OPB867T55							0.05" / 0.05"		
	OPB870T11	890 nm	Transistor	0.125" / 0.345"	0.5 / NA	20 / 50	50	0.01" / 0.01"	0.425" / 0.320"	77
	OPB870T11TX							0.01" / 0.01"		
	OPB870T11TX							0.01" / 0.01"		
	OPB870T51	890 nm	Transistor	0.125" / 0.345"	0.5 / NA	20 / 50	50	0.05" / 0.01"	0.425" / 0.320"	77
	OPB870T51TX							0.05" / 0.01"		
	OPB870T51TX							0.05" / 0.01"		

Slotted Switch Tab Both Sides "T Package"

Package Slotted Switch	Part Number	LED Peak Wavelength	Sensor	Slot Width / Depth	$I_{C(ON)}$ (mA) Min / Max	I_F (mA) Typ / Max	V_{CE} (Volts) Max	Aperture Emitter/Sensor	Lead Length / Spacing	Package #
	OPB870T55	890 nm	Transistor	0.125" / 0.345"	0.5 / NA	20 / 50	50	0.05" / 0.05"	0.425" / 0.320"	77
	OPB870T55TX									
	OPB870T55TX									
	OPB871T51	890 nm	Transistor	0.125" / 0.345"	1.0 / NA	10 / 50	50	0.05" / 0.01"	0.425" / 0.320"	77
	OPB871T51TX									
	OPB871T51TX									
	OPB871T55	890 nm	Transistor	0.125" / 0.345"	1.0 / NA	10 / 50	50	0.05" / 0.05"	0.425" / 0.320"	77
	OPB871T55TX									
	OPB871T55TX									
	OPB872T11	890 nm	Transistor	0.125" / 0.345"	1.8 / NA	20 / 50	50	0.01" / 0.01"	0.425" / 0.320"	77
	OPB872T11TX									
	OPB872T11TX									
	OPB872T51	890 nm	Transistor	0.125" / 0.345"	1.8 / NA	20 / 50	50	0.05" / 0.01"	0.425" / 0.320"	77
	OPB872T51TX									
	OPB872T51TX									
	OPB872T55	890 nm	Transistor	0.125" / 0.345"	1.8 / NA	20 / 50	50	0.05" / 0.05"	0.425" / 0.320"	77
	OPB872T55TX									
	OPB872T55TX									
	OPB875T11	890 nm	Transistor	0.125" / 0.345"	0.5 / NA	20 / 50	50	0.01" / 0.01"	0.425" / 0.220"	77
	OPB875T51							0.05" / 0.01"		
	OPB875T55							0.05" / 0.05"		
	OPB876T11	890 nm	Transistor	0.125" / 0.345"	1.0 / NA	10 / 50	50	0.01" / 0.01"	0.425" / 0.220"	77
	OPB876T51							0.05" / 0.01"		
	OPB876T55							0.05" / 0.05"		
	OPB877T11	890 nm	Transistor	0.125" / 0.345"	1.8 / NA	20 / 50	50	0.01" / 0.01"	0.425" / 0.220"	77
	OPB877T51							0.05" / 0.01"		
	OPB877T55							0.05" / 0.05"		

Package Slotted Switch	Part Number	LED Peak Wavelength	Sensor	Slot Width / Depth	$I_{C(ON)}$ (mA) Min / Max	I_F (mA) Typ / Max	V_{CE} (Volts) Max	Aperture Emitter/Sensor	Lead Length / Spacing	Package #
	OPB380T11Z	890 nm	Transistor	0.125" / 0.345"	1.0 / 5.0	20 / 50	0.4	0.01" / 0.01"	24" / 26 AWG Wire	79
	OPB380T51Z				2.5 / 10.0			0.05" / 0.01"		
	OPB380T55Z				3.5 / 14.0			0.05" / 0.05"		
	OPB390T11Z	890 nm	Transistor	0.125" / 0.345"	1.0 / 5.0	20 / 50	30	0.01" / 0.01"	24" / 26 AWG Wire	79
	OPB390T51Z				2.5 / 10.0			0.05" / 0.01"		
	OPB390T55Z				3.5 / 14.0			0.05" / 0.05"		
	OPB800W51Z	890 nm	Transistor	0.375" / 0.350"	0.05 / NA	20 /50	30	0.01" / 0.01"	24" / 26 AWG Wire	109
	OPB800W55Z							0.05" / 0.05"		
	OPB801W55Z				1.0 / NA	10 / 50				109
	OPB802W55Z				1.8 / NA	20 / 50				
	OPB810W51Z	890 nm	Transistor	0.375" / 0.350"	0.05 / NA	20 /50	30	0.01" / 0.01"	24" / 26 AWG Wire	109
	OPB810W55Z							0.05" / 0.05"		
	OPB811W55Z				1.0 / NA	10 / 50				109
	OPB812W55Z				1.8 / NA	20 / 50				

Slotted Switch Tab Both Sides — "T Package"

Package Slotted Switch	Part Number	LED Peak Wavelength	Sensor	Slot Width / Depth	$I_{C(ON)}$ (mA) Min / Max	I_F (mA) Typ / Max	V_{CE} (Volts) Max	Aperture Emitter/Sensor	Lead Length / Spacing	Package #
	OPB815WZ	890 nm	Transistor	0.375"/ 0.430"	1.0 / NA	20 / 50	30	None	24" / 26 AWG	104
	OPB829AZ	890 nm	Transistor	0.125" / 0.315"	1.8 / NA	20 / 50	30	None	24" / 26 AWG	111
	OPB829BZ							None / 0.01"		
	OPB829CZ							None / 0.06"		
	OPB829DZ							None / 0.01"		
	OPB880T11Z	890 nm	Transistor	0.125" / 0.315"	0.5 / NA	20 / 50	50	0.01" / 0.01"	24" / 26 AWG Wire	81
	OPB880T51Z							0.05" / 0.01"		
	OPB880T55Z							0.05" / 0.05"		
	OPB881T51Z	890 nm	Transistor	0.125" / 0.315"	1.0 / NA	10 / 50	50	0.05" / 0.01"	24" / 26 AWG Wire	81
	OPB881T55Z							0.05" / 0.05"		
	OPB882T51Z	890 nm	Transistor	0.125" / 0.315"	1.8 / NA	20 / 50	50	0.05" / 0.01"	24" / 26 AWG Wire	81
	OPB882T55Z							0.05" / 0.05"		
	OPB890T11Z	890 nm	Transistor	0.125" / 0.315"	0.5 / NA	20 / 50	50	0.01" / 0.01"	24" / 26 AWG Wire	81
	OPB890T51Z							0.05" / 0.01"		
	OPB890T55Z							0.05" / 0.05"		
	OPB891T51Z	890 nm	Transistor	0.125" / 0.315"	1.0 / NA	10 / 50	50	0.05" / 0.01"	24" / 26 AWG Wire	81
	OPB891T55Z							0.05" / 0.05"		
	OPB892T51Z	890 nm	Transistor	0.125" / 0.315"	1.8 / NA	20 / 50	50	0.05" / 0.01"	24" / 26 AWG Wire	81
	OPB892T55Z							0.05" / 0.05"		

Package Slotted Switch	Part Number	LED Peak Wavelength	Sensor Photologic®	Slot Width / Depth	I_{CCL} / I_{CCH} (mA) Max	I_F (mA) Typ / Max	V_{CC} (Volts) Min / Max	Aperture Emitter/Sensor	Lead Length / Spacing	Package #
	OPB460T11	890 nm	10K Pull-up	0.125" / 0.345"	7.5 / 7.5	12 / 50	4 / 16.0	0.01" / 0.01"	0.425" / 0.320"	78
	OPB461T11		OC							
	OPB462T11		Inv-10K			12 / 50				
	OPB463T11		Inv-OC							
	OPB470T11	890 nm	10K Pull-up	0.125" / 0.345"	7.5 / 7.5	12 / 50	4 / 16.0	0.01" / 0.01"	0.425" / 0.320"	78
	OPB471T11		OC							
	OPB472T11		Inv-10K			12 / 50				
	OPB473T11		Inv-OC							
	OPB665T	890 nm	10K Pull-up	0.125" / 0.345"	12 / 12	10 / 50	4 / 16.0	0.05" / 0.01"	0.100" / 0.320"	98
	OPB666T		OC							
	OPB667T		Inv-10K							
	OPB668T		Inv-OC							
	OPB960T11	890 nm	Totem-Pole	0.125" / 0.345"	15 / 15	15 / 50	4.75 / 5.25	0.01" / 0.01"	0.425" / 0.320"	78
	OPB960T51							0.05" / 0.01"		
	OPB960T55							0.05" / 0.05"		

Slotted Switch Tab Both Sides —"T Package"

Package Slotted Switch	Part Number	LED Peak Wavelength	Sensor Photologic®	Slot Width / Depth	I_{CCL} / I_{CCH} (mA) Max	I_F (mA) Typ / Max	V_{CC} (Volts) Min / Max	Aperture Emitter/Sensor	Lead Length / Spacing	Package #
	OPB961T11	890 nm	Open-Collector	0.125" / 0.345"	15 / 15	15 / 50	4.75 / 5.25	0.01" / 0.01"	0.425" / 0.320"	78
	OPB961T51							0.05" / 0.01"		
	OPB961T55							0.05" / 0.05"		
	OPB962T11	890 nm	Inv-Totem-Pole	0.125" / 0.345"	15 / 15	15 / 50	4.75 / 5.25	0.01" / 0.01"	0.425" / 0.320"	78
	OPB962T51							0.05" / 0.01"		
	OPB962T55							0.05" / 0.05"		
	OPB963T11	890 nm	Inv-Open-Collector	0.125" / 0.345"	15 / 15	15 / 50	4.75 / 5.25	0.01" / 0.01"	0.425" / 0.320"	78
	OPB963T51							0.05" / 0.01"		
	OPB963T55							0.05" / 0.05"		
	OPB970T11	890 nm	Totem-Pole	0.125" / 0.345"	15 / 15	15 / 50	4.75 / 5.25	0.01" / 0.01"	0.425" / 0.320"	78
	OPB970T51							0.05" / 0.01"		
	OPB970T55							0.05" / 0.05"		
	OPB971T11	890 nm	Open-Collector	0.125" / 0.345"	15 / 15	15 / 50	4.75 / 5.25	0.01" / 0.01"	0.425" / 0.320"	78
	OPB971T51							0.05" / 0.01"		
	OPB971T55							0.05" / 0.05"		
	OPB972T11	890 nm	Inv-Totem-Pole	0.125" / 0.345"	15 / 15	15 / 50	4.75 / 5.25	0.01" / 0.01"	0.425" / 0.320"	78
	OPB972T51							0.05" / 0.01"		
	OPB972T55							0.05" / 0.05"		
	OPB973T11	890 nm	Inv-Open-Collector	0.125" / 0.345"	15 / 15	15 / 50	4.75 / 5.25	0.01" / 0.01"	0.425" / 0.320"	78
	OPB973T51							0.05" / 0.01"		
	OPB973T55							0.05" / 0.05"		
	OPB900L55	890 nm	Totem-Pole	0.375" / 0.350"	15 / 15	20 / 50	4.75 / 5.25	0.05" / 0.05"	0.425" / 0.570"	112
	OPB901L55		OC							
	OPB902L55		Inv-Totem-Pole			20 / 50				
	OPB903L55		Inv-OC							
	OPB910L55	890 nm	Totem-Pole	0.375" / 0.350"	15 / 15	20 / 50	4.75 / 5.25	0.05" / 0.05"	0.425" / 0.570"	112
	OPB911L55		OC							
	OPB912L55		Inv-Totem-Pole			20 / 50				
	OPB913L55		Inv-OC							

Package Slotted Switch	Part Number	LED Peak Wavelength	Sensor Photologic®	Slot Width / Depth	I_{CCL} / I_{CCH} (mA) Max	I_F (mA) Typ / Max	V_{CC} (Volts) Min / Max	Aperture Emitter/Sensor	Lead Length / Spacing	Package #
	OPB480T11Z	890 nm	10K Pull-up	0.125" / 0.345"	7.5 / 7.5	12 / 50	4.5 / 16.0	0.01" / 0.01"	24" / 26 AWG Wire	80
	OPB481T11Z		OC							
	OPB482T11Z		Inv-10K			12 / 50				
	OPB483T11Z		Inv-OC							
	OPB490T11Z	890 nm	10K Pull-up	0.125" / 0.345"	7.5 / 7.5	12 / 50	4.5 / 16.0	0.01" / 0.01"	24" / 26 AWG Wire	80
	OPB491T11Z		OC							
	OPB492T11Z		Inv-10K			12 / 50				
	OPB493T11Z		Inv-OC							

Slotted Switch Tab Both Sides — "T Package"

Package Slotted Switch	Part Number	LED Peak Wavelength	Sensor Photologic®	Slot Width / Depth	I_{CCL} / I_{CCH} (mA) Max	I_F (mA) Typ / Max	V_{CC} (Volts) Min / Max	Aperture Emitter/Sensor	Lead Length / Spacing	Package #
	OPB980T11Z	890 nm	Totem-Pole	0.125" / 0.345"	15 / 15	15 /50	4.75 / 5.25	0.01" / 0.01"	24" / 26 AWG Wire	82
	OPB980T51Z							0.05" / 0.01"		
	OPB980T55Z							0.05" / 0.05"		
	OPB981T11Z	890 nm	Open-Collector	0.125" / 0.345"	15 / 15	15 /50	4.75 / 5.25	0.01" / 0.01"	24" / 26 AWG Wire	82
	OPB981T51Z							0.05" / 0.01"		
	OPB981T55Z							0.05" / 0.05"		
	OPB982T11Z	890 nm	Inv-Totem-Pole	0.125" / 0.345"	15 / 15	15 /50	4.75 / 5.25	0.01" / 0.01"	24" / 26 AWG Wire	82
	OPB982T51Z							0.05" / 0.01"		
	OPB982T55Z							0.05" / 0.05"		
	OPB983T11Z	890 nm	Inv-Open-Collector	0.125" / 0.345"	15 / 15	15 /50	4.75 / 5.25	0.01" / 0.01"	24" / 26 AWG Wire	82
	OPB983T51Z							0.05" / 0.01"		
	OPB983T55Z							0.05" / 0.05"		
	OPB990T11Z	890 nm	Totem-Pole	0.125" / 0.345"	15 / 15	15 /50	4.75 / 5.25	0.01" / 0.01"	24" / 26 AWG Wire	82
	OPB990T51Z							0.05" / 0.01"		
	OPB990T55Z							0.05" / 0.05"		
	OPB991T11Z	890 nm	Open-Collector	0.125" / 0.345"	15 / 15	15 /50	4.75 / 5.25	0.01" / 0.01"	24" / 26 AWG Wire	82
	OPB991T51Z							0.05" / 0.01"		
	OPB991T55Z							0.05" / 0.05"		
	OPB992T11Z	890 nm	Inv-Totem-Pole	0.125" / 0.345"	15 / 15	15 /50	4.75 / 5.25	0.01" / 0.01"	24" / 26 AWG Wire	82
	OPB992T51Z							0.05" / 0.01"		
	OPB992T55Z							0.05" / 0.05"		
	OPB993T11Z	890 nm	Inv-Open-Collector	0.125" / 0.345"	15 / 15	15 /50	4.75 / 5.25	0.01" / 0.01"	24" / 26 AWG Wire	82
	OPB993T51Z							0.05" / 0.01"		
	OPB993T55Z							0.05" / 0.05"		
	OPB900W55Z	890 nm	Totem-Pole	0.375" / 0.350"	15 / 15	20 / 50	4.75 / 5.25	0.05" / 0.05"	24" / 26 AWG Wire	112
	OPB901W55Z		Open-Collector							
	OPB902W55Z		Inv-Totem-Pole							
	OPB903W55Z		Inv-Open-Collector							
	OPB910W55Z	890 nm	Totem-Pole	0.375" / 0.350"	15 / 15	20 / 50	4.75 / 5.25	0.05" / 0.05"	24" / 26 AWG Wire	112
	OPB911W55Z		Open-Collector							
	OPB912W55Z		Inv-Totem-Pole							
	OPB913W55Z		Inv-Open-Collector							

Package Slotted Switch	Part Number	LED Peak Wavelength	Sensor	Slot Width / Depth	$I_{C(ON)}$ (mA) Max	I_F (mA) Typ / Max	V_{CE} (Volts) Max	Aperture Emitter/Sensor	Lead Length / Spacing	Package #
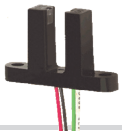	OPB816Z	890 nm	Transistor	0.200" / 0.635"	30	20 / 50	30	0.05" / 0.01"	24" / 26 AWG Wire	113
	OPB817Z			0.200" / 0.885"	30			0.05" / 0.01"		114

Slotted Switch Tab Both Sides "T Package"

Package Slotted Switch	Part Number	LED Peak Wavelength	Sensor	Slot Width / Depth	$I_{C(ON)}$ (mA) Min / Max	I_F (mA) Typ / Max	V_{CE} (Volts) Max	Aperture Emitter/Sensor	Lead Length / Spacing	Package #
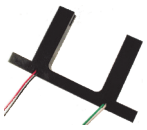	OPB819Z	890 nm	Transistor	1.26" / 1.38"	0.10 / 30	20 / 50	30	None	24" / 26 AWG Wire	116

Package Fluid Sensor	Part Number	LED Peak Wavelength	Sensor	Tube Size	$I_{C(ON)}$ Ratio Typ	I_F (mA) Typ / Max	V_{CE} (Volts) Max	Lead Length / Spacing	Package #
	OPB350W187Z	890 nm	Transistor	0.188"	1 : 2.3	20 / 50	30	24" / 26 AWG Wire	96
	OPB350W250Z			0.250"	1 : 2.3				

Package Dual Sensor	Part Number	LED Peak Wavelength	Sensor	Slot Width	$I_{C(ON)}$ (mA) Min	I_F (mA) Typ / Max	V_{CE} (Volts) Max	Aperture Emitter/Sensor	Lead Length / Spacing	Package #
	OPB822S	890 nm	Transistor	0.090"	0.25	20 / 50	30	None / 0.01"	.0425" / 0.300"	117
	OPB822SD				0.10			0.01" / 0.01"		

Package Slotted Switch	Part Number	LED Peak Wavelength	Sensor Photologic®	Slot Width/ Depth	I_{CCL} / I_{CCH} (mA) Max	I_F (mA) Typ / Max	V_{CC} (Volts) Min / Max	Aperture Emitter/Sensor	Lead Length / Spacing	Package #
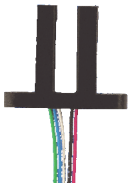	OPB916BZ	880 nm	10K Pull-Up	0.200" / 0.635"	7 / 7	10 / 50	4.5 / 18.0	0.05" / 0.01"	24" / 26 AWG Wire	118
	OPB916BOCZ		Inv-10K Pull-Up							
	OPB916IZ		Open-Collector							
	OPB916IOCZ		Inv-Open-Collector							
	OPB917BZ	880 nm	10K Pull-Up	0.200" / 0.885	7 / 7	10 / 50	4.5 / 18.0	0.05" / 0.01"	24" / 26 AWG Wire	115
	OPB917BOCZ		Inv-10K Pull-Up							
	OPB917IZ		Open-Collector							
	OPB917IOCZ		Inv-Open-Collector							

Package Slotted Switch	Part Number	LED Peak Wavelength	Sensor	Slot Width/ Depth	$I_{C(ON)}$ (mA) Max	I_F (mA) Typ / Max	V_{CE} (Volts) Max	Aperture Emitter/Sensor	Lead Length / Spacing	Package #
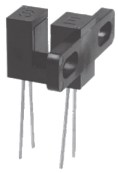	OPB830L11	890 nm	Transistor	0.125" / 0.315"	0.50	20 / 50	50	0.01" / 0.01"	0.425"/ 0.320"	120
	OPB830L51							0.05" / 0.01"		
	OPB830L55							0.05" / 0.05"		
	OPB831L51	890 nm	Transistor	0.125" / 0.315"	1.00	20 / 50	50	0.05" / 0.01"	0.425"/ 0.320"	120
	OPB831L55							0.05" / 0.05"		
	OPB832L51	890 nm	Transistor	0.125" / 0.315"	1.80	20 / 50	50	0.05" / 0.01"	0.425"/ 0.320"	120
	OPB832L55							0.05" / 0.05"		

Slotted Switch Tab Both Sides — "T Package"

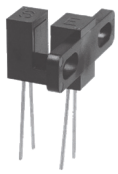

Package Slotted Switch	Part Number	LED Peak Wavelength	Sensor	Slot Width/ Depth	$I_{C(ON)}$ (mA) Max	I_F (mA) Typ / Max	V_{CE} (Volts) Max	Aperture Emitter/Sensor	Lead Length / Spacing	Package #
	OPB835L11	890 nm	Transistor	0.125" / 0.315"	0.50	20 / 50	50	0.01" / 0.01"	0.425"/ 0.320"	120
	OPB835L51							0.05" / 0.01"		
	OPB835L55							0.05" / 0.05"		
	OPB836L51	890 nm	Transistor	0.125" / 0.315"	1.00	20 / 50	50	0.05" / 0.01"	0.425"/ 0.320"	120
	OPB836L55							0.05" / 0.05"		
	OPB837L51	890 nm	Transistor	0.125" / 0.315"	1.80	20 / 50	50	0.05" / 0.01"	0.425"/ 0.320"	120
	OPB837L55							0.05" / 0.05"		
	OPB840L11	890 nm	Transistor	0.125" / 0.315"	0.50	20 / 50	50	0.01" / 0.01"	0.425"/ 0.320"	120
	OPB840L51							0.05" / 0.01"		
	OPB840L55							0.05" / 0.05"		
	OPB841L51	890 nm	Transistor	0.125" / 0.315"	1.00	20 / 50	50	0.05" / 0.01"	0.425"/ 0.320"	120
	OPB841L55							0.05" / 0.05"		
	OPB842L51	890 nm	Transistor	0.125" / 0.315"	1.80	20 / 50	50	0.05" / 0.01"	0.425"/ 0.320"	120
	OPB842L55							0.05" / 0.05"		
	OPB845L11	890 nm	Transistor	0.125" / 0.315"	0.50	20 / 50	50	0.01" / 0.01"	0.425"/ 0.320"	120
	OPB845L51							0.05" / 0.01"		
	OPB845L55							0.05" / 0.05"		
	OPB846L51	890 nm	Transistor	0.125" / 0.315"	1.00	20 / 50	50	0.05" / 0.01"	0.425"/ 0.320"	120
	OPB846L55							0.05" / 0.05"		
	OPB847L51	890 nm	Transistor	0.125" / 0.315"	1.80	20 / 50	50	0.05" / 0.01"	0.425"/ 0.320"	120
	OPB847L55							0.05" / 0.05"		

Package Slotted Switch	Part Number	LED Peak Wavelength	Sensor	Slot Width / Depth	$I_{C(ON)}$ (mA) Max	I_F (mA) Typ / Max	V_{CE} (Volts) Max	Aperture Emitter/Sensor	Lead Length / Spacing	Package #
	OPB830W11Z	880 nm	Transistor	0.125" / 0.315"	0.50	20 / 50	10	0.01" / 0.01"	24"/26 AWG Wire	121
	OPB830W51Z							0.05" / 0.01"		
	OPB830W55Z							0.05" / 0.05"		
	OPB831W51Z	880 nm	Transistor	0.125" / 0.315"	1.00	20 / 50	10	0.05" / 0.01"	24"/26 AWG Wire	121
	OPB831W55Z							0.05" / 0.05"		
	OPB832W51Z	880 nm	Transistor	0.125" / 0.315"	1.80	20 / 50	10	0.05" / 0.01"	24"/26 AWG Wire	121
	OPB832W55Z							0.05" / 0.05"		
	OPB840W11Z	880 nm	Transistor	0.125" / 0.315"	0.50	20 / 50	10	0.01" / 0.01"	24"/26 AWG Wire	121
	OPB840W51Z							0.05" / 0.01"		
	OPB840W55Z							0.05" / 0.05"		
	OPB841W51Z	880 nm	Transistor	0.125" / 0.315"	1.00	20 / 50	10	0.05" / 0.01"	24"/26 AWG Wire	121
	OPB841W55Z							0.05" / 0.05"		
	OPB842W51Z	880 nm	Transistor	0.125" / 0.315"	1.80	20 / 50	10	0.05" / 0.01"	24"/26 AWG Wire	121
	OPB842W55Z							0.05" / 0.05"		

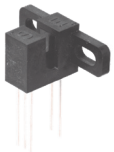

Package Slotted Switch	Part Number	LED Peak Wavelength	Sensor Photologic®	Slot Width / Depth	I_{CCL} / I_{CCH} (mA) Max	I_F (mA) Typ / Max	V_{CC} (Volts) Min / Max	Aperture Emitter/Sensor	Lead Length / Spacing	Package #
	OPB930L51	880 nm	Totem-Pole	0.125" / 0.315"	15 / 15	20 / 50	4.75 / 5.25	0.05" / 0.01"	0.425" / 0.320"	122
	OPB930L55							0.05" / 0.05"		
	OPB931L51	880 nm	Open-Collector	0.125" / 0.315"	15 / 15	20 / 50	4.75 / 5.25	0.05" / 0.01"	0.425" / 0.320"	122
	OPB931L55							0.05" / 0.05"		

Slotted Switch Tab Both Sides "T Package" Flag Switches

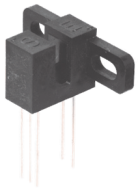

Package Slotted Switch	Part Number	LED Peak Wavelength	Sensor Photologic®	Slot Width	I_{CCL} / I_{CCH} (mA) Max	I_F (mA) Typ / Max	V_{CC} (Volts) Min / Max	Aperture Emitter/Sensor	Lead Length / Spacing	Package #
	OPB932L51	880 nm	Inv-Totem-Pole	0.125" / 0.315"	15 / 15	20 / 50	4.75 / 5.25	0.05" / 0.01"	0.425" / 0.320"	122
	OPB932L55							0.05" / 0.05"		
	OPB933L51	880 nm	Inv-Open-Collector	0.125" / 0.315"	15 / 15	20 / 50	4.75 / 5.25	0.05" / 0.01"	0.425" / 0.320"	122
	OPB933L55							0.05" / 0.05"		
	OPB940L51	880 nm	Totem-Pole	0.125" / 0.315"	15 / 15	20 / 50	4.75 / 5.25	0.05" / 0.01"	0.425" / 0.320"	122
	OPB940L55							0.05" / 0.05"		
	OPB941L51	880 nm	Open-Collector	0.125" / 0.315"	15 / 15	20 / 50	4.75 / 5.25	0.05" / 0.01"	0.425" / 0.320"	122
	OPB941L55							0.05" / 0.05"		
	OPB942L51	880 nm	Inv-Totem-Pole	0.125" / 0.315"	15 / 15	20 / 50	4.75 / 5.25	0.05" / 0.01"	0.425" / 0.320"	122
	OPB942L55							0.05" / 0.05"		
	OPB943L51	880 nm	Inv-Open-Collector	0.125" / 0.315"	15 / 15	20 / 50	4.75 / 5.25	0.05" / 0.01"	0.425" / 0.320"	122
	OPB943L55							0.05" / 0.05"		

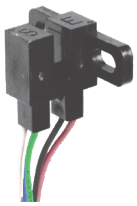

Package Slotted Switch	Part Number	LED Peak Wavelength	Sensor Photologic®	Slot Width	I_{CCL} / I_{CCH} (mA) Max	I_F (mA) Typ / Max	V_{CC} (Volts) Min / Max	Aperture Emitter/Sensor	Lead Length / Spacing	Package #
	OPB930W51Z	880 nm	Totem-Pole	0.125" / 0.315"	15 / 15	20 / 50	4.75 / 5.25	0.05"/ 0.01"	24"/26 AWG Wire	119
	OPB930W55Z							0.05"/ 0.05"		
	OPB931W51Z	880 nm	Open-Collector	0.125" / 0.315"	15 / 15	20 / 50	4.75 / 5.25	0.05"/ 0.01"	24"/26 AWG Wire	119
	OPB931W55Z							0.05"/ 0.05"		
	OPB932W51Z	880 nm	Inv-Totem-Pole	0.125" / 0.315"	15 / 15	20 / 50	4.75 / 5.25	0.05"/ 0.01"	24"/26 AWG Wire	119
	OPB932W55Z							0.05"/ 0.05"		
	OPB933W51Z	880 nm	Inv-Open-Collector	0.125" / 0.315"	15 / 15	20 / 50	4.75 / 5.25	0.05"/ 0.01"	24"/26 AWG Wire	119
	OPB933W55Z							0.05"/ 0.05"		
	OPB940W51Z	880 nm	Totem-Pole	0.125" / 0.315"	15 / 15	20 / 50	4.75 / 5.25	0.05"/ 0.01"	24"/26 AWG Wire	119
	OPB940W55Z							0.05"/ 0.05"		
	OPB941W51Z	880 nm	Open-Collector	0.125" / 0.315"	15 / 15	20 / 50	4.75 / 5.25	0.05"/ 0.01"	24"/26 AWG Wire	119
	OPB941W55Z							0.05"/ 0.05"		
	OPB942W51Z	880 nm	Inv-Totem-Pole	0.125" / 0.315"	15 / 15	20 / 50	4.75 / 5.25	0.05"/ 0.01"	24"/26 AWG Wire	119
	OPB942W55Z							0.05"/ 0.05"		
	OPB943W51Z	880 nm	Inv-Open-Collector	0.125" / 0.315"	15 / 15	20 / 50	4.75 / 5.25	0.05"/ 0.01"	24"/26 AWG Wire	119
	OPB943W55Z							0.05"/ 0.05"		

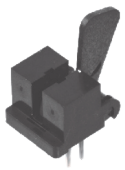

Package Slotted Switch	Part Number	LED Peak Wavelength	Sensor	Flag Travel Degrees Max	$I_{C(ON)}$ (mA) Min	I_F (mA) Typ / Max	V_{CE} (Volts) Typ / Max	Lead Length / Spacing	Package #
	OPB680	890 nm	Rbe Transistor	51°	0.60	10 / 50	5 / 30	0.100" / 0.275"	124
	OPB680-20								
	Part Number	**LED Peak Wavelength**	**Sensor Photologic®**	**Flag Travel Degrees Max**	**I_{CCL} / I_{CCH} (mA) Max**	**I_F (mA) Typ / Max**	**V_{CC} (Volts) Min / Max**	**Lead Length / Spacing**	**Package #**
	OPB685	890 nm	10K Pull-Up	59°	12 / 12	10 / 50	4.5 / 16.0	0.100" / 0.275"	125
	OPB686		Open Collector						
	OPB687		Inv. 10K Pull-Up						
	OPB688		Inv. Open Collector						

Flag Switches, Special Slot, Specialty Component Pairs

Package Slotted Switch

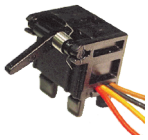

Part Number	LED Peak Wavelength	Sensor	Flag Travel Degrees Max	$I_{C(ON)}$ (mA) Min	I_F (mA) Typ / Max	V_{CE} (Volts) Typ / Max	Lead Length / Spacing	Package #
OPB850A	935 nm	Transistor	70°	0.50	20 / 50	10 / 30	18" / 26 AWG Wire	127
OPB850-1Z								128

Package Slotted Switch

Part Number	LED Peak Wavelength	Sensor	Flag Travel Degrees Max	$I_{C(ON)}$ (mA) Min	I_F (mA) Typ / Max	V_{CE} (Volts) Typ / Max	Lead Length / Spacing	Package #
OPB690Z	890 nm	Rbe Transistor	70°	0.60	10 / 50	5 / 30	Molex 5102	126
Part Number	**LED Peak Wavelength**	**Sensor Photologic®**	**Flag Travel Degrees Max**	**I_{CCL} / I_{CCH} (mA) Max**	**I_F (mA) Typ / Max**	**V_{CC} (Volts) Min / Max**	**Lead Length / Spacing**	**Package #**
OPB695AZ	890 nm	10K Pull-Up	70°	12 / 12	10 / 50	4.5 / 16.0	Molex 5102	126
OPB695BZ								
OPB695CZ								
OPB696AZ	890 nm	Open Collector	70°	12 / 12	10 / 50	4.5 / 16.0	Molex 5102	126
OPB696BZ								
OPB696CZ								
OPB697AZ	890 nm	Inv. 10K Pull-Up	70°	12 / 12	10 / 50	4.5 / 16.0	Molex 5102	126
OPB697BZ								
OPB697CZ								
OPB698AZ	890 nm	Inv. Open Collector	70°	12 / 12	10 / 50	4.5 / 16.0	Molex 5102	126
OPB698BZ								
OPB698CZ								

Package Slotted Switch

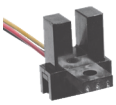

Part Number	LED Peak Wavelength	Sensor	Slot Width / Depth	$I_{C(ON)}$ (mA) Min	I_F (mA) Typ / Max	V_{CE} (Volts) Max	Aperture Emitter/ Sensor	Lead Length / Spacing	Package #
OPB857Z	890 nm	Transistor	0.150" / 0.355"	1.5	20 / 50	30	None	11.5" / 26 AWG Wire	129

Package Module Optical Pair

Part Number	LED Peak Wavelength	Sensor	$I_{C(ON)}$ (mA) Min / Max	I_F (mA) Typ / Max	VCE (Volts) Max	Lead Length / Spacing	Package #
OPB100Z, OPB100-EZ, OPB100-SZ	880 nm	Transistor	5 / 50	20 / 100	30	24" / 26 AWG Wire	130

Package Module Pair

Optical Pair Part Number	LED Peak Wavelength	Sensor	$I_{C(ON)}$ (mA) Min / Max	I_F (mA) Typ / Max	V_{CE} (Volts) Typ / Max	Connector Type	Package #
OPB856Z	935 nm	Transistor	1.80	20 / 50	5 / 30	Use Molex 03-06-2023	123

Visible LED Information

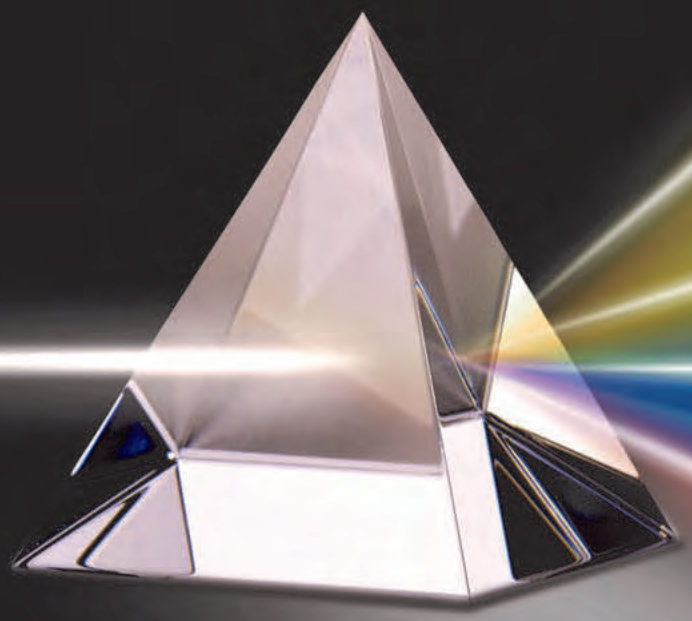

Category

VLED Description ..... D—2

Product Specifications

Through-hole ..... D—3

High Flux ..... D—4

High Power ..... D—4

Surface Mount ..... D—4

White ..... D—5

RGB ..... D—6

Leadership in Manufacturing

As a global leader in compound semiconductor design and packaging, OPTEK begins with the most advanced High-Brightness Light Emitting Diode starting materials. The dice, or chips for OPTEK's Phosphored White, Blue, Blue-Green and Green are InGaN on sapphire and SiC. The Red, Orange, Amber and Yellow LEDs are made from the most advanced AlInGaP on gallium arsenide in the most robust of structures for the new challenging applications in Solid State Lighting and Illumination.

Advanced chip technology is the heart of the device, whether it is an industry standard or application- specific surface mount power or leaded component. It is the advance in all of these materials that continues to expand the use of the LED beyond the traditional status indicator applications.

Discrete LED Capabilities

Enabling outdoor LED Video Message signs and providing daylight viewing of full color cell phone displays and LED camera flash is the wide span of OPTEK HB LED uses. Design engineers in solid-state traffic and pedestrian signals find standard OPTEK product designed specifically for their use.

The following is a sample of the package portfolio and typical uses of OPTEK product in the Visible Spectrum.

High Brightness Through-hole LEDs	OPTEK offers all colors with high light output in a variety of diameters, shapes and viewing angles, using AlInGaP and InGan material. Binning by wavelength, forward voltage, and luminous intensity is available.	Applications include displays and signs, indoors and in full sunlight; automotive interior and exterior lighting; information signage; architectural and decorative lighting.
Surface Mount	Reflective PLCC and chip LED packages are available in single- and multi-color packages, including tunable full-color RGB for dynamic and static lighting effects.	Surface mount LEDs provide bright light output with low V_F to backlight LCDs in handheld appliances. Reds, greens, and blues form pixels for outdoor and indoor signs, displays, and channel letters.
High Flux	OPTEK's 4-pin square-shaped LEDs are available in multiple viewing angles and 5 colors.	This package provides lighting solutions for automotive applications and is used in the signage industry in arrays and housings to replace neon.
High Power	1-watt and greater components complete with thermal management deliver bright solid-state lighting solutions.	For general illumination, emergency lighting, and task lighting, OPTEK offers long-life energy efficient devices and reduced maintenance costs.

Special Product Capability

Thermally managed LED components and arrays are the key to safely and reliably replacing older technologies. These solutions are found in the OPTEK toolbox.

coolLED™ insured by ANOTHERM™

Automotive interior and exterior lighting designers turn to OPTEK's optoelectronics engineering teams for application-specific lighting assemblies as well as discrete LEDs. When an application requires tight bin and rank segmentation or other special care, OPTEK LEDs are always the answer.

The extensive engineering support for customer designs using LEDs for color on demand is ready, willing and able to meet the challenge.

OVAL THROUGH-HOLE LED – Multiple Viewing Angles

Oval Through-Hole

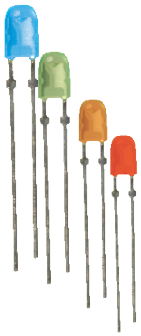

Part Number	Size	Chip Material	Chip Emitted Color	Chip λD (nm)	Lens Color	I_V (mcd) at I_F=mA	I_V (mcd) Typ.	Viewing Angle °	Package #
OVLHBKD8	5mm	InGaN	Blue	470	Color Diffused	20	500	110° / 50°	200
OVLHGKD8		InGaN	Green	525			1100		
OVLHQKD8		AlInGaP	Red-Orange	618			800		
OVLHRKD8		AlInGaP	Red	624			900		
OVLJBGD8	4mm	InGaN	Blue	470		20	300	100° / 50°	201
OVLJGGD8		InGaN	Green	525			1200		
OVLJRGD8		AlInGaP	Red	624			400		
OVLKBGT6	4mm	InGaN	Blue	470		20	300	100° / 60°	202
OVLKGGT6		InGaN	Green	525			1100		
OVLKQGT6		AlInGaP	Red-Orange	616			430		

5mm ROUND HIGH-INTENSITY THROUGH-HOLE LED

5mm Through-Hole

Part Number	Size	Chip Material	Chip Emitted Color	Chip λD (nm)	Lens Color	I_V (mcd) at I_F=mA	I_V (mcd) Typ.	Viewing Angle	Package #
OVLGB0C6B9	5mm	InGaN	Blue	470	Water Clear	20	3200	6°	203
OVLGC0C6B9		InGaN	Blue-Green	505			8000		
OVLGG0C5B9		InGaN	Green	525			5000		
OVLGJ0C3B9		AlInGaP	Yellow-Green	573			2300		
OVLGY0C9B9		AlInGaP	Yellow	589			20000		
OVLGO0C8B9		AlInGaP	Orange	615			16000		
OVLGS0C8B9		AlInGaP	Red	631			10000		
OVLFB3C7	5mm	InGaN	Blue	470	Water Clear	20	1350	30°	204
OVLFG3C7		InGaN	Green	525			5200		
OVLFY3C7		AlInGaP	Yellow	589			5700		
OVLFR3C7		AlInGaP	Red	623			5000		

5mm CYLINDER THROUGH-HOLE LED

5mm Through-Hole

Part Number	Size	Chip Material	Chip Emitted Color	Chip λD (nm)	Lens Color	I_V (mcd) at I_F=mA	I_V (mcd) Typ.	Viewing Angle	Package #
OVLLB8C7	5mm	InGaN	Blue	470	Water Clear	20	300	85°	207
OVLLG8C7		InGaN	Green	525			670		
OVLLY8C7		AlInGaP	Yellow	589			650		
OVLLR8C7		AlInGaP	Red	623			570		

3mm ROUND THROUGH-HOLE LED

3mm Through-Hole

Part Number	Size	Chip Material	Chip Emitted Color	Chip λD (nm)	Lens Color	I_V (mcd) at I_F=mA	I_V (mcd) Typ.	Viewing Angle	Package #
OVLAB6CB8	3mm	InGaN	Blue	470	Water Clear	20	600	65°	205
OVLAG6CB8		InGaN	Green	527			2000		
OVLAS6CB8		AlInGaP	Red	628			1100		
OVLBB4C7	3mm	InGaN	Blue	470	Water Clear	20	900	45°	206
OVLBG4C7		InGaN	Green	525			2000		
OVLBY4C7		AlInGaP	Yellow	589			2400		
OVLBR4C7		AlInGaP	Red	623			1800		

SURFACE MOUNT POWER LED – 7mm²

7mm² SMD	Part Number	Package	Chip			Lens Color	Φ_V (lm)		Viewing Angle	Package #
			Material	Emitted Color	λD (nm)		at I_F=mA	Typ.		
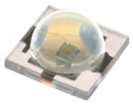	OVSPBCCR8	7mm²	InGaN	Blue	470	Water Clear	450	9	140°	208
	OVSPGCCR8		InGaN	Green	527		300	37		
	OVSPAAC5R8		AlInGaP	Amber	594		450	35	105°	
	OVSPRAC5R8		AlInGaP	Red	624		450	32		
	OVSPW7CR8		InGaN	White	----		350	23	70°	

SUPER FLUX 4-PIN LED – 7.6mm²

*Dome Height = 1.9mm

7.6mm² Through-hole	Part Number	Package	Chip			Lens Color	Φ_V (mlm)		Viewing Angle	Package #
			Material	Emitted Color	λD (nm)		at I_F=mA	Typ.		
	OVFSB6C8	7.6mm²	InGaN	Blue	470	Water Clear	30	850	60°	209
	OVFSG6C8		InGaN	Green	527			2500		
	OVFSAAC8		AlInGaP	Amber	591		70	5000	100°	
	OVFSQ4C8		AlInGaP	Red-Orange	618			4500	*40°	
	OVFSRAC8		AlInGaP	Red	624			4500	100°	
	OVFSW6C8		InGaN	White	----		30	1200	*60°	

TOP-VIEW SURFACE MOUNT LED with FLAT LENS

PLCC4 SMD	Part Number	Package	Chip			Lens Color	I_V (mcd)		Viewing Angle	Package #
			Material	Emitted Color	λD (nm)		at I_F=mA	Typ.		
	OVSABBC2R8	PLCC4	InGaN	Blue	470	Water Clear	30	200	120	210
	OVSACBC2R8		InGaN	Blue-Green	505			560		
	OVSAGBC2R8		InGaN	Green	527			700		
	OVSAABC2R8		AlInGaP	Amber	591		50	700		
	OVSASBC2R8		AlInGaP	Red	628			900		

TOP-VIEW SURFACE MOUNT LED with DOMED LENS

PLCC4 SMD	Part Number	Package	Chip			Lens Color	I_V (mcd)		Viewing Angle	Package #
			Material	Emitted Color	λD (nm)		at I_F=mA	Typ.		
	OVSAABLCR8	PLCC4	AlInGaP	Amber	594	Water Clear	50	1650	60°	211
	OVSAQBLCR8		AlInGaP	Red-Orange	618			2800		
	OVSASBLCR8		AlInGaP	Red	628			900		

SIDE EMITTING SURFACE MOUNT LED

RA PLCC SMD	Part Number	Package	Chip			Lens Color	I_V (mcd)		Viewing Angle	Package #
			Material	Emitted Color	λD (nm)		at I_F=mA	Typ.		
	OVSR9BBCR8	RA PLCC	InGaN	Blue	470	Water Clear	20	120	120	212
	OVSR9CBCR8		InGaN	Blue-Green	505			400		
	OVSR9GBCR8		InGaN	Green	527			560		
	OVSR9ABCR8		AlInGaP	Amber	594			350		
	OVSR9RBCR8		AlInGaP	Red	624			400		

WHITE InGaN SURFACE MOUNT LED

Package		Part Number	Lens Color	Intensity/Flux at I_F=mA	Intensity/Flux Typ.	Viewing Angle	Package #
	PLCC2	OVS9WBCR9	Water Clear	20	450mcd	120°	213
	RA 2.8x1.2x.8	OVSRWACR6		20	1000mcd	x120°, y110°	214
	PLCC4	OVSAWBCR9		3x25	1900mcd	120°	210
	3.4x2.8	OVSPWFCR6		350	25lm	120°	215
	7x7	OVSPW7CR8		350	23lm	70°	208
	RA PLCC	OVSR9WBCR8		20	600mcd	120°	212

WHITE InGaN THROUGH-HOLE LED

Package		Part Number	Lens Color	Intensity/Flux at I_F=mA	Intensity/Flux Typ.	Viewing Angle	Package #
	Round 3mm	OVLAW4CB6	Water Clear	20	1000mcd	45°	205
	Round 5mm	OVLEW1CB9		20	9000mcd	15°	203
		OVLEW3CB6		20	2100mcd	30°	216
		OVLEW5CB6			1600mcd	50°	224
	4-pin Flux	OVFSW6C8		30	1200mlm	60°	209

FULL-COLOR (R/G/B) SURFACE MOUNT LED

Package		Part Number	Lens Color	I_V (mcd) at I_F=mA	Typ. R	Typ. G	Typ. B	Viewing Angle	Package #
	Right-angle Chip LED 1.2x2.7x1.35	OVSRRGBBC9	Water Clear	20	72	180	45	120°	217
	Top-view Chip LED 1.6x1.6x.35	OVSTKGBBCR9		20	100	180	50	120°	218
	Top-view Chip LED 2.4x2.4x.95	OVSTRGBAC6		20	100	333	88	110°	219
	Top-View Chip LED 3.5x3.0x1.55 lens type	OVSTRGBLC6		20	180	550	152	R: x80°, y50° G: x60°, y30° B: x60°, y30°	220
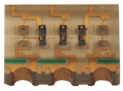	Top-view Chip LED 3.5x3.0x1.4 flat type	OVSTRGBFC6		20	53	165	46	R: x150°, y150° G: x130°, y140° B: x130°, y120°	221
	PLCC4 3.2x2.8x1.9	OVSARGB3R8		20	300	450	110	120°	222
	PLCC6 6.0x5.0x2.5	OVSTRGBBCR8		R50	1000	900	280	120°	223

10– WATT LEDNIUM SERIES

Package	Part Number	Lens Color	Die: Emitted Color	Die: λD (nm)	Forward Voltage V_F @ 600mA: Min. (V)	Typ. (V)	Max. (V)	Flux @ 1.05A: Typ. (lm)	Viewing Angle	Package #
	OVTL09LGAB	Water Clear	Blue	467	8.9	9.1	9.25	60	120°	225
	OVTL09LGAG		Green	524	9.75	9.9	10.1	290		
	OVTL09LGAA		Amber	595	6.3	6.4	6.5	330		
	OVTL09LGAR		Red	624	6	6.1	6.2	247		
	OVTL09LGAW		White	N/A	8.9	9.1	9.25	250		

Package Configurations

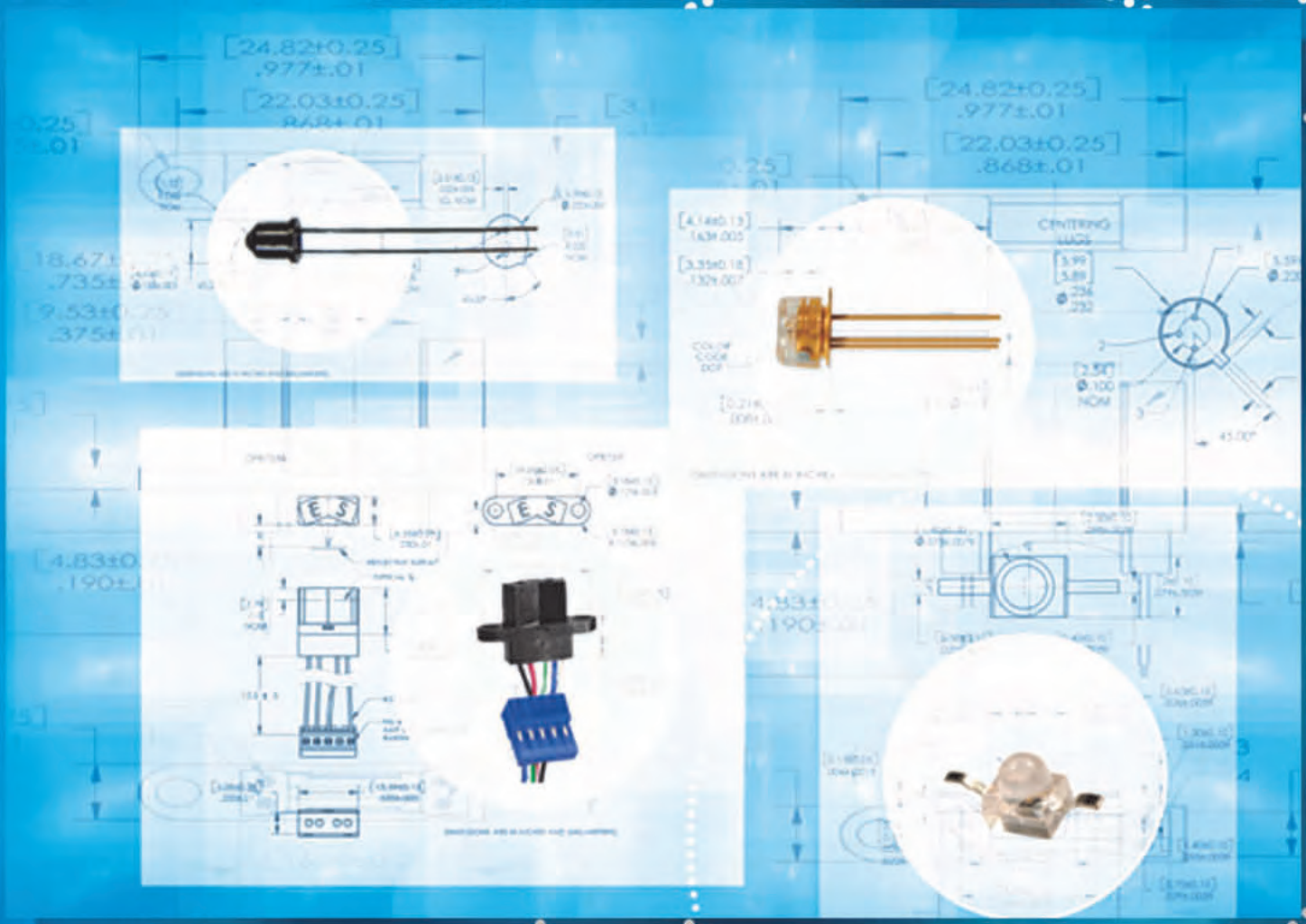

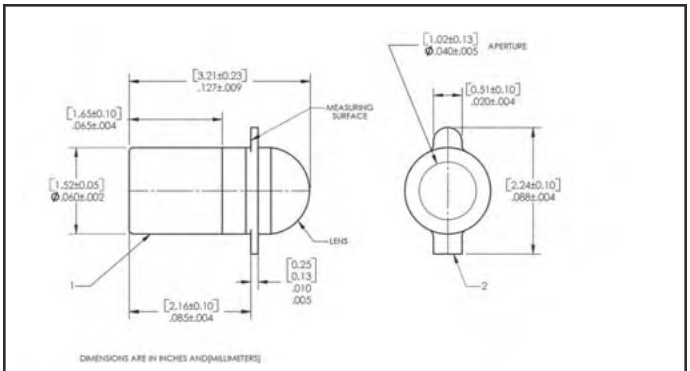

Pin #	LED	Sensor
1	Anode	Collector
2	Cathode	Emitter

Package # 1

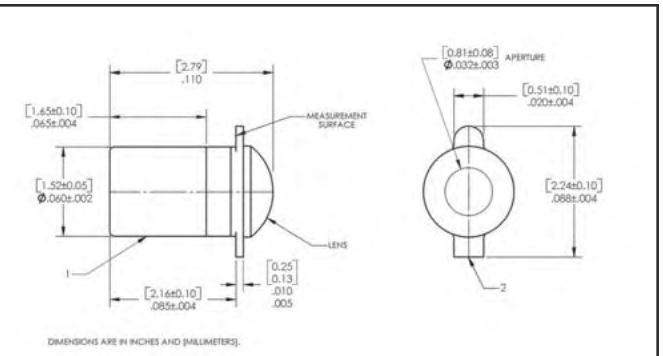

Pin #	LED	Sensor
1	Anode	Collector / Cathode
2	Cathode	Emitter / Anode

Package # 2

TO-46 & TO-18 Base

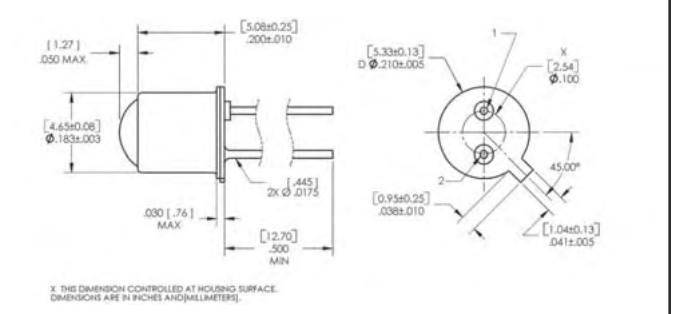

Pin #	LED	Sensor
1	Anode	Collector / Cathode
2	Cathode	Emitter / Anode

Package # 3

TO-46 Base

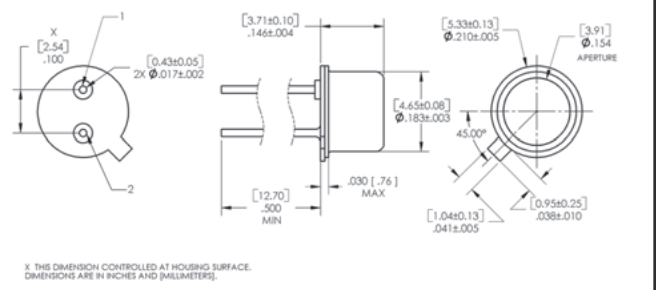

Pin #	LED
1	Cathode
2	Anode

Package # 4

TO-46 Base

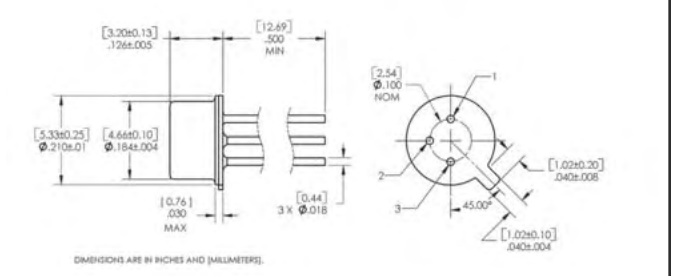

Pin #	LED	Sensor	Receiver
1	Anode	Collector / Cathode	Ground
2	Cathode	Emitter / Anode	Output
3	Case	Case	Vcc

Package #5

TO-46 Base

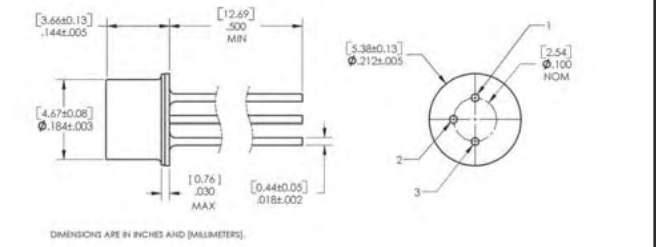

Pin #	300	310	310Y
1	NC	VCSEL Anode	VCSEL Cathode
2	Cathode	VCSEL Cathode / PD Anode	VCSEL Anode / PD Cathode
3	Anode	PD Cathode	PD Anode

Package # 6

TO-46 Base

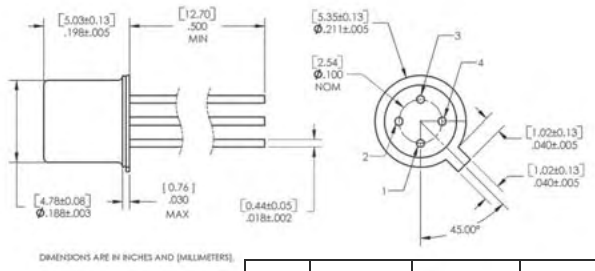

Pin #	3C91	3C92	3N2XX
1	Cathode	Cathode	Emitter
2	Collector	Emitter	Cathode
3	Emitter	Collector	Collector
4	Anode	Anode	Anode

Package # 7

TO-46 Base

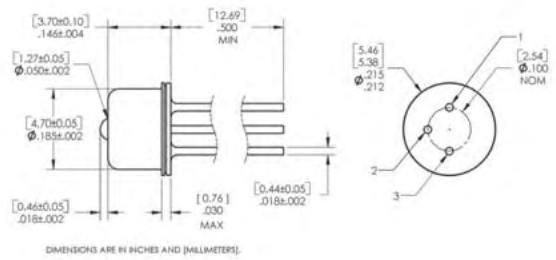

Pin #	Sensor	Sensor-Y
1	VCSEL Anode	VCSEL Cathode
2	VCSEL Cathode / PD Anode	VCSEL Anode / PD Cathode
3	PD Cathode	PD Anode

Package # 8

TO-18 Base

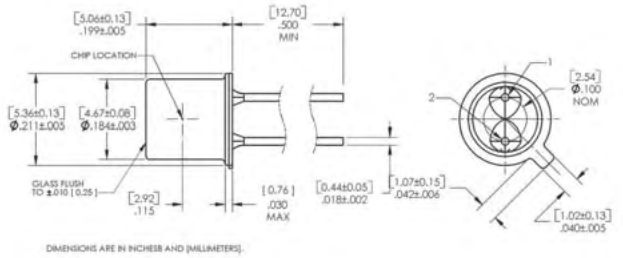

Pin #	LED	Sensor
1	Anode	Collector / Cathode
2	Cathode	Emitter / Anode

Package # 9

TO-5 Base

Pin #	Sensor
1	Cathode
2	Anode

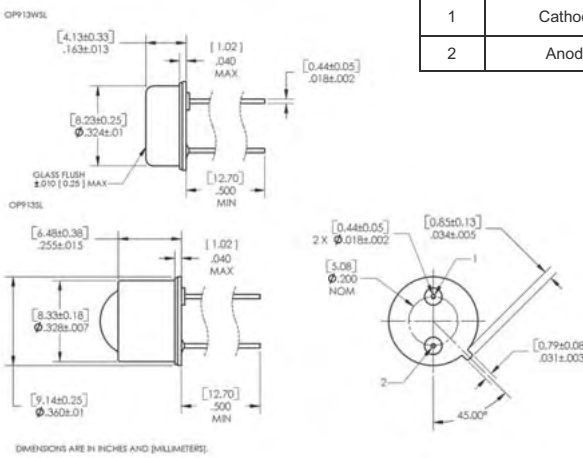

Package # 10

TO-78

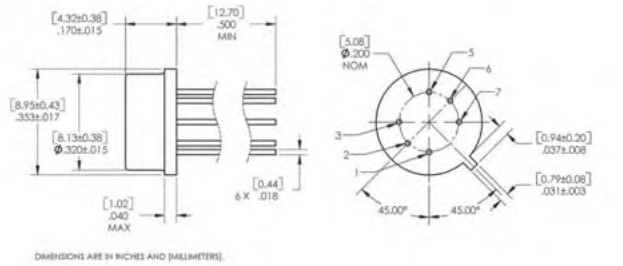

Pin #	Function	Pin #	Function
1	Emitter	5	Anode
2	Base	6	Open
3	Collector	7	Cathode

Package # 11

TO-18 Base

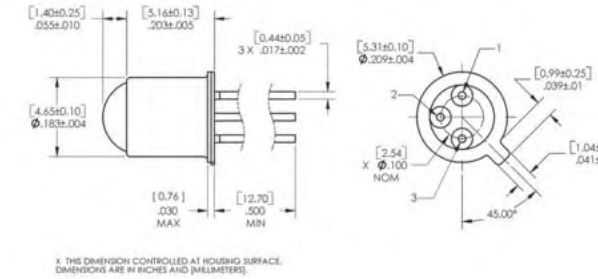

Pin #	OPL80_ or OPL81_	OPL82_	Transistor
1	Ground	Ground	Collector
2	Vcc	Output	Base
3	Output	Vcc	Emitter

Package # 12

TO-18 Base

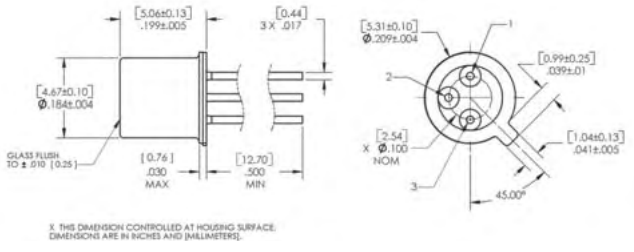

Pin #	Transistor
1	Collector
2	Base
3	Emitter

Package # 13

TO-1 (3mm) Plastic

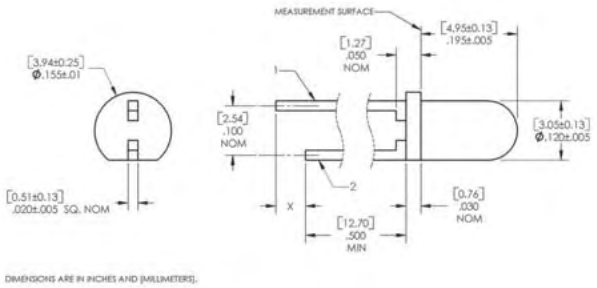

Pin #	LED & Diode X=0.060" (1.5mm)	Transistor X=0" (0.0mm)
1	Anode	Emitter
2	Cathode	Collector

Package # 14

T-1 (3mm) Plastic

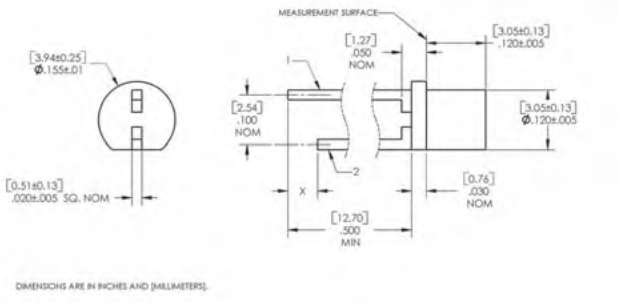

Pin #	LED X=0.060" (1.5mm)	Transistor X=0" (0.0mm)
1	Anode	Emitter
2	Cathode	Collector

Package # 15

T-1 (3mm) Plastic

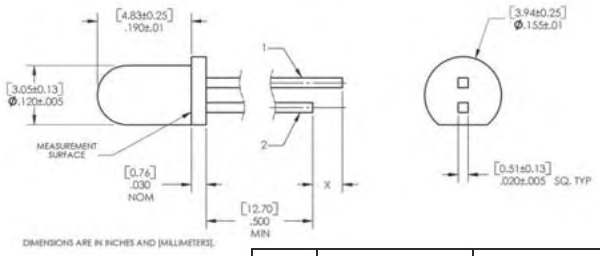

Pin #	LED & Diode X=0.060" (1.5mm)	Transistor X=0" (0.0mm)
1	Anode	Emitter
2	Cathode	Collector

Package # 16

T-1 (3mm) Plastic

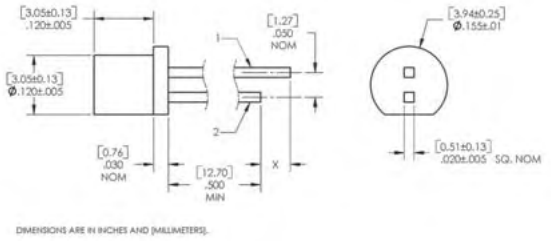

Pin #	LED X=0.060" (1.5mm)	Transistor X=0" (0.0mm)
1	Anode	Emitter
2	Cathode	Collector

Package # 17

T-1 3/4 (5mm) Plastic

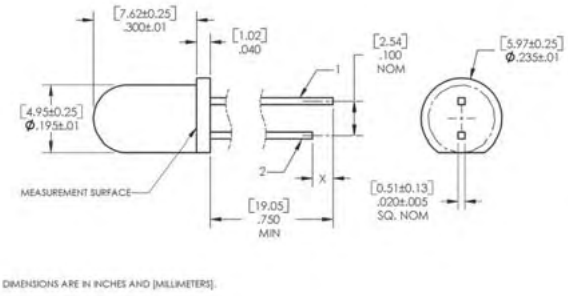

Pin #	LED X=0.060" (1.5mm)	Sensor X=0" (0.0mm)
1	Anode	Emitter / Anode
2	Cathode	Collector / Cathode

Package # 18

T-1 3/4 (5mm) Plastic

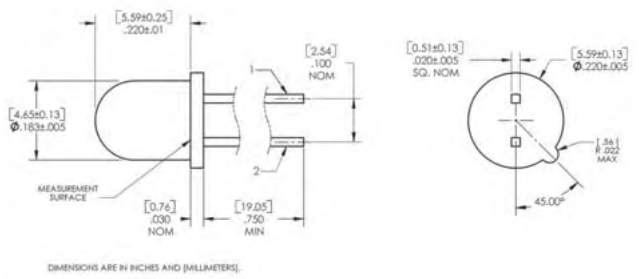

Pin #	LED X=0.060" (1.5mm)	Sensor X=0" (0.0mm)
1	Anode	Collector / Cathode
2	Cathode	Emitter / Anode

Package # 19

TO-46 Plastic Dome Lens

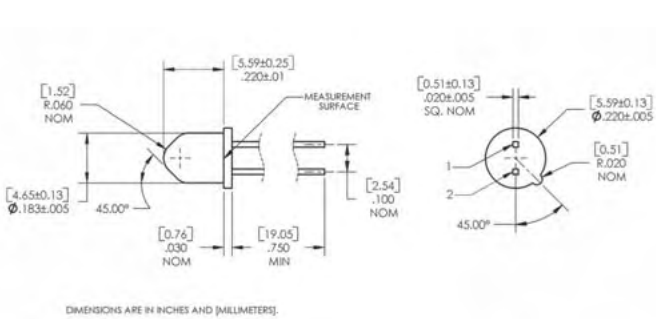

Pin #	LED	Sensor
1	Anode	Collector
2	Cathode	Emitter

Package # 20

End Looker NO Lens Plastic

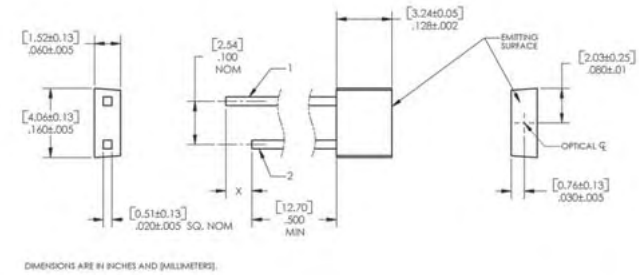

Pin #	LED X=0.060" (1.5mm)	Sensor X=0" (0.0mm)
1	Anode	Collector
2	Cathode	Emitter

Package # 21

End Looker Lens Plastic

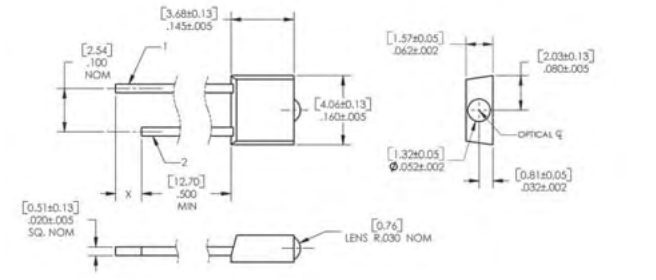

Pin #	LED X=0.060" (1.5mm)	Sensor X=0" (0.0mm)
1	Anode	Collector / Cathode
2	Cathode	Emitter / Anode

Package # 22

Sidelooker Lens Plastiac

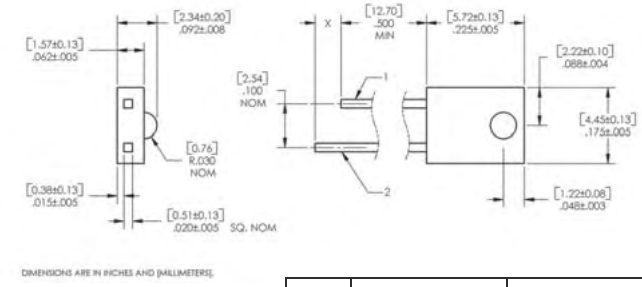

Pin #	LED X=0.060" (1.5mm)	Sensor X=0" (0.0mm)
1	Cathode	Emitter / Anode
2	Anode	Collector / Cathode

Package # 23

Sidelooker Recessed Lens Plastic

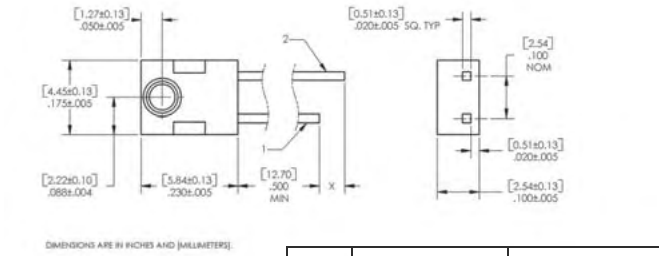

Pin #	LED X=0.060" (1.5mm)	Sensor X=0" (0.0mm)
1	Cathode	Emitter / Anode
2	Anode	Collector / Cathode

Package # 24

Sidelooker Lens Plastic

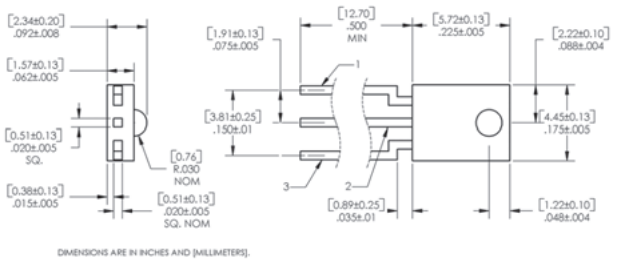

Pin #	Sensor
1	Ground
2	Output
3	Vcc

Package # 25

Sidelooker Recessed Lens Plastic

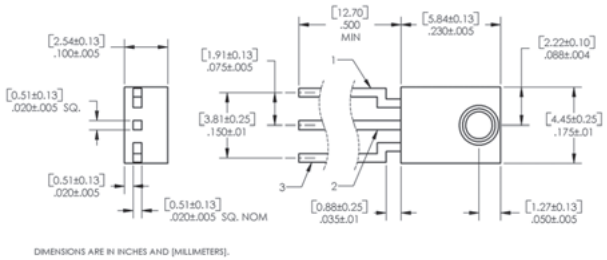

Pin #	Sensor
1	Ground
2	Output
3	Vcc

Package # 26

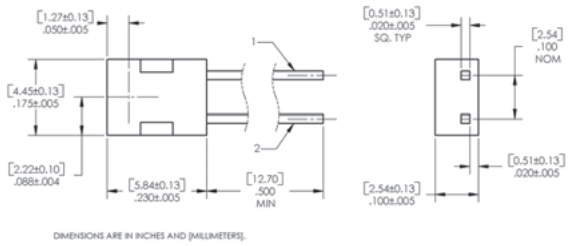

Pin #	Diode
1	Cathode
2	Anode

Package # 27

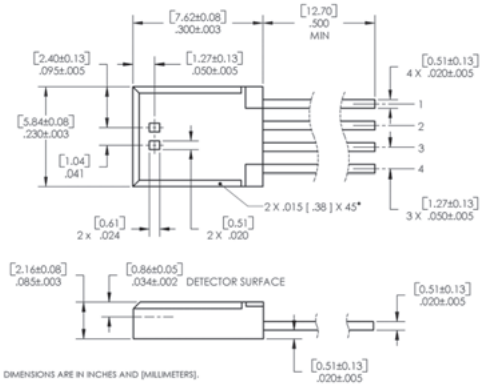

Pin #	Description
1	Vcc
2	Out-B
3	Out-A
4	Ground

Package # 28

Hall-Effect Ceramic Sidelooker

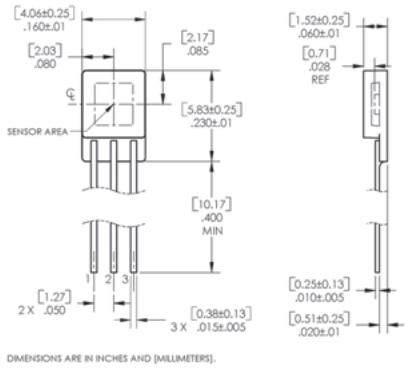

Pin #	Description
1	Vcc
2	Ground
3	Output

Package # 29

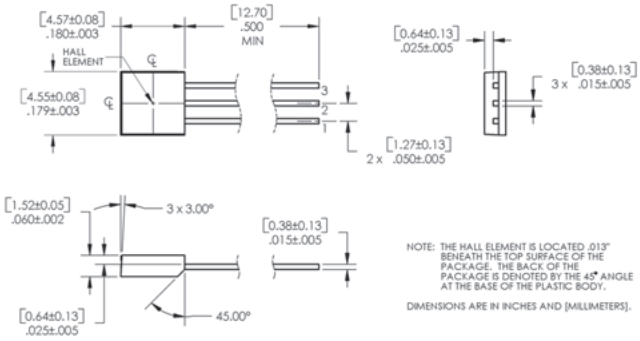

Pin #	Description
1	Vcc
2	ground
3	Output

Package # 30

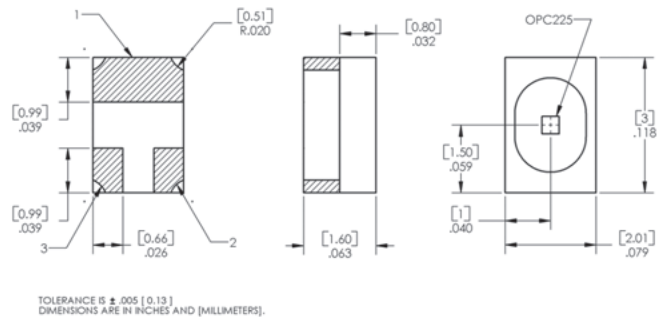

Pin #	LED	Transistor
1	Anode	Collector
2	Cathode	Emitter
3	N.C.	Base

Package # 31

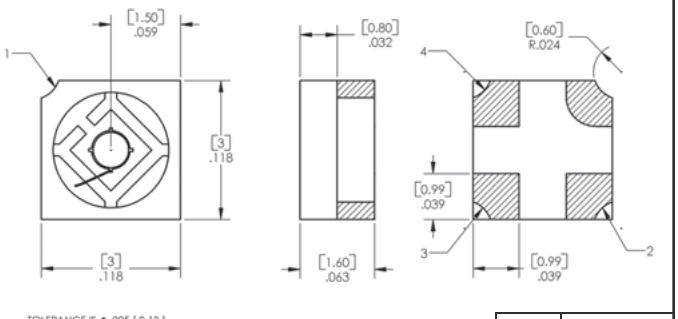

Pin #	Description
1	Cathode
2	Anode
3	N.C
4	N.C.

Package # 32

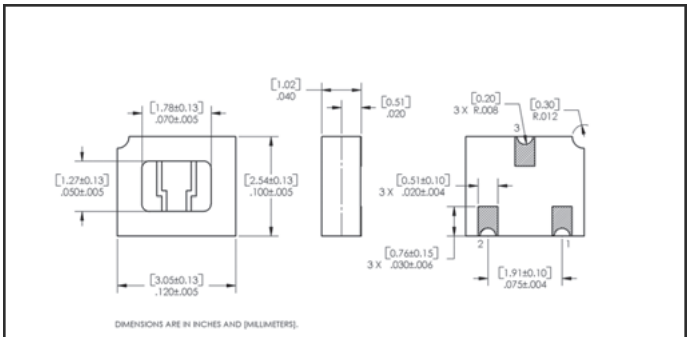

Pin #	Description
1	Base
2	Emitter
3	Collector

Package # 33

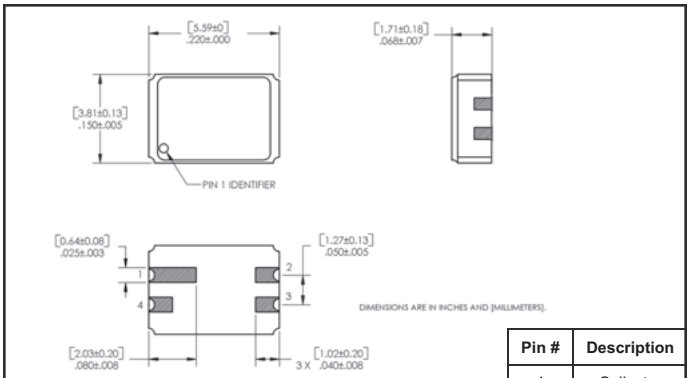

Pin #	Description
1	Collector
2	Emitter
3	Base
4	N.C.

Package # 34

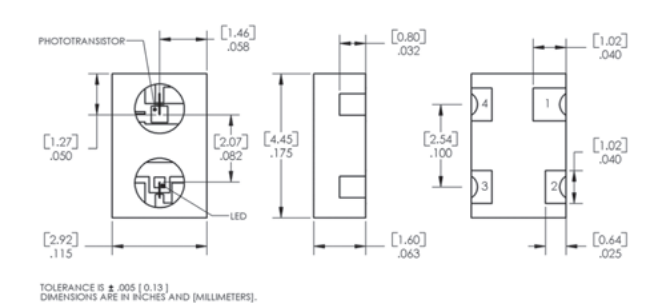

Pin #	Description
1	Collector
2	Anode
3	Cathode
4	Emitter

Package # 35

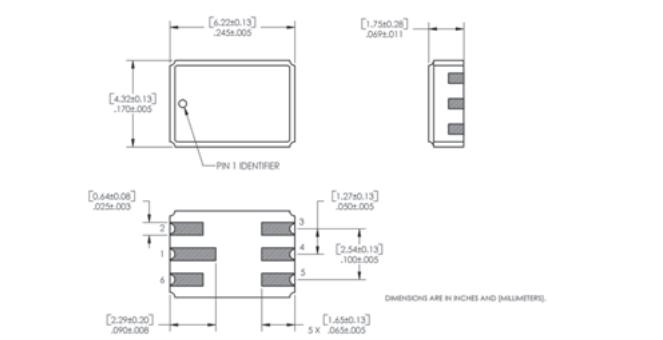

Coupler

Pin #	Description	Pin #	Description
1	Anode	4	Base
2	-	5	Emitter
3	Collector	6	Cathode

Dual Transistors

Pin #	Description	Pin #	Description
1	Collector/Source-A	4	Collector/Source-B
2	Base/Gate-A	5	Emitter/Drain-B
3	Base/Gate-B	6	Emitter/Drain-A

Package # 36

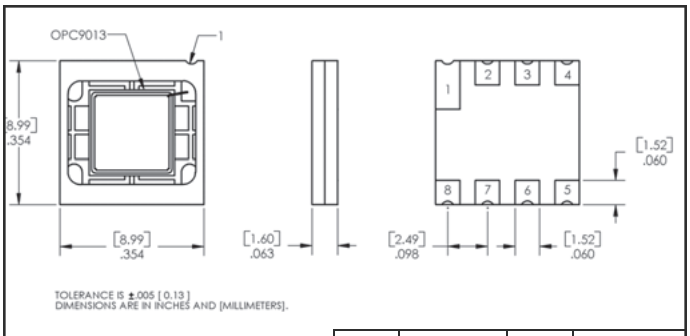

Pin #	Description	Pin #	Description
1	Anode	5	N.C.
2	Cathode	6	Cathode
3	Cathode	7	Cathode
4	N.C.	8	N.C.

Package # 37

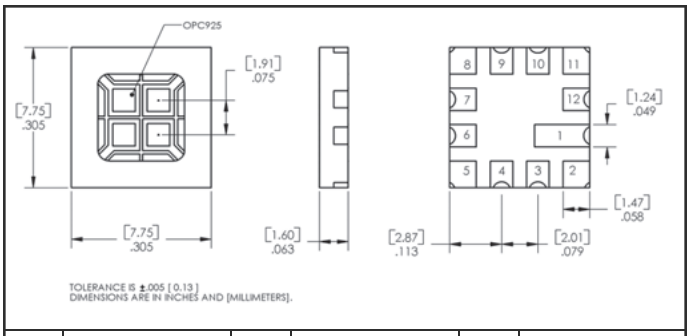

Pin #	OPR5911 / OPR5925	Pin #	OPR5911 / OPR5925	Pin #	OPR5911 / OPR5925
1	Anode / Anode 1	5	Cathode B / Cathode 2	9	N. C. / N.C.
2	Cathode A / Cathode 1	6	N. C. / Anode 2	10	N. C. / N.C.
3	N. C. / N.C.	7	N.C. / Anode 3	11	Cathode D / Cathode 4
4	N. C. / N.C.	8	Cathode C / Cathode 3	12	Anode 4

Package # 38

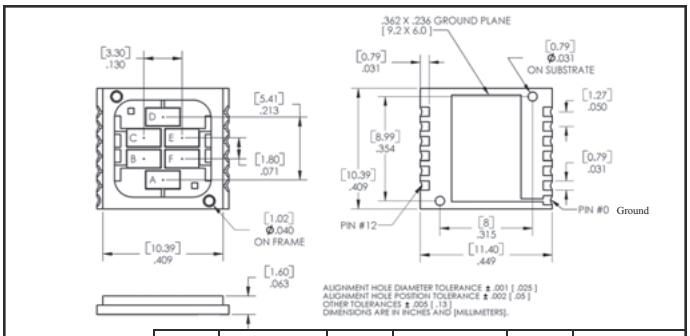

Pin #	Description	Pin #	Description	Pin #	Description
1	Cathode A	5	Cathode C	9	Anode E
2	Cathode B	6	Cathode D	10	Anode F
3	Anode B	7	Anode D	11	Cathode F
4	Anode C	8	Cathode E	12	Anode A

Package # 39

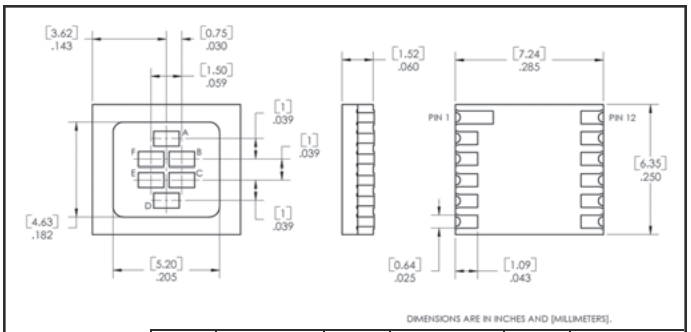

Pin #	Description	Pin #	Description	Pin #	Description
1	Cathode A	5	Cathode C	9	Anode E
2	Cathode B	6	Cathode D	10	Anode F
3	Anode B	7	Anode D	11	Cathode F
4	Anode C	8	Cathode E	12	Anode A

Package # 40

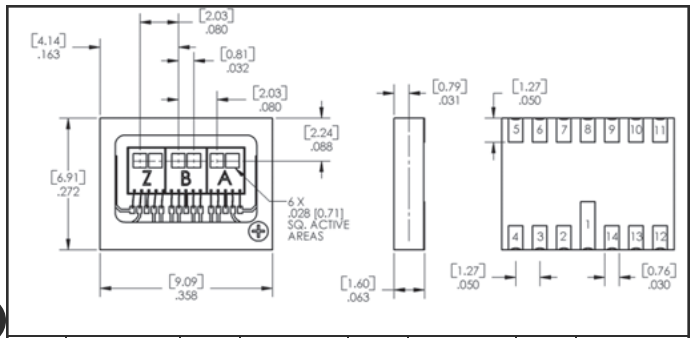

Pin #	Description	Pin #	Description	Pin #	Description	Pin #	Description
1	B - Output	5	N.C.	9	Z + Trim	13	B + Trim
2	B - Vcc	6	A - Output	10	Z -Trim	14	B -Trim
3	A + Trim	7	A - Vcc	11	Z - Output	-	-
4	A -Trim	8	Common	12	Z - Vcc	-	-

Package # 41

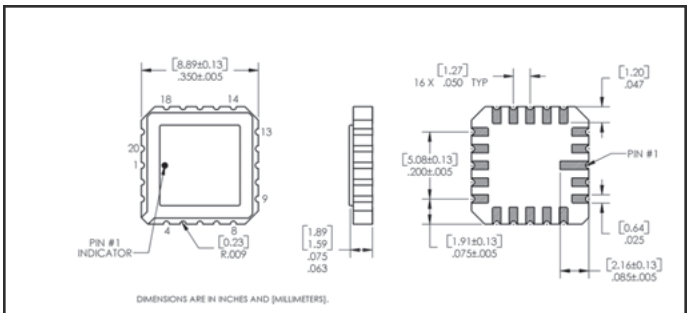

Pin #	Description	Pin #	Description	Pin #	Description
2	Collector-A	8	Base-B	15	Emitter-C
4	Base-A	10	Collector-B	17	Emitter-D
5	Emitter-A	12	Collector-C	18	Base-D
7	Emitter-B	14	Base-C	20	Collector-D

Package # 42

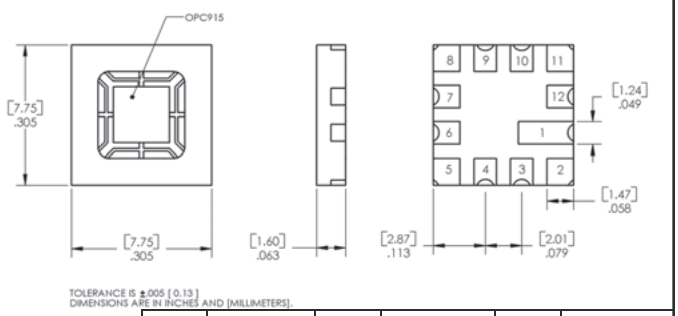

Pin #	Description	Pin #	Description	Pin #	Description
1	Anode	5	Cathode	9	N.C.
2	Cathode	6	N.C.	10	N.C.
3	N.C.	7	N.C.	11	Cathode
4	N.C.	8	Cathode	12	N.C.

Package # 43

Notes:

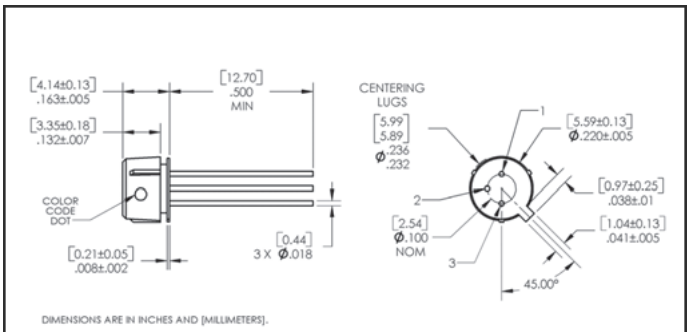

Pin #	OPF560	LED / Diode	Receiver
1	Vcc	Case	Ground
2	Ground	Cathode	Output
3	Output	Anode	Vcc

Package # 45

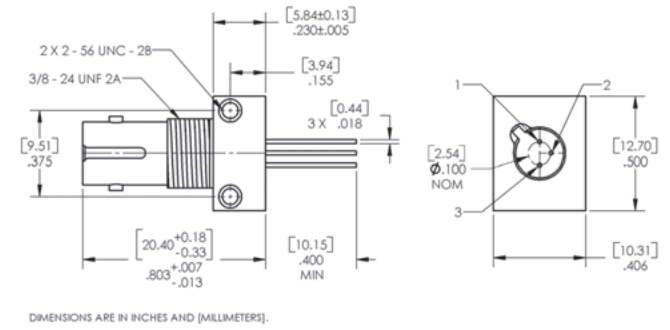

Pin #	LED / Diode	Receiver	OPF522	VCSEL AT & BT	VCSEL YAT & YBT
1	Anode	Vcc	Vcc	Anode	Cathode
2	Cathode	Output	Ground	Cathode/PD Anode	Anode/ PD Cathode
3	Case	Ground	Output	PD Cathode	PD Anode

Package # 47

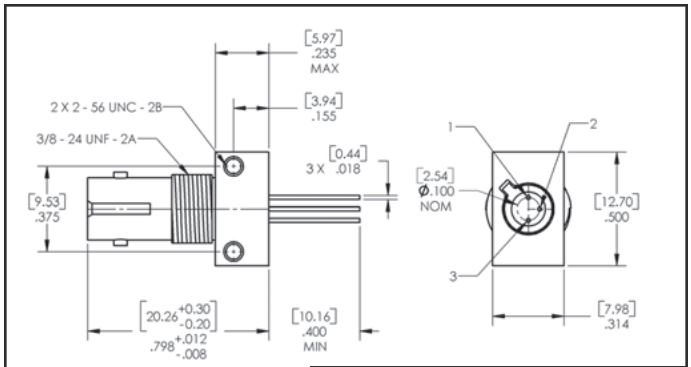

Pin #	LED	Sensor
1	Anode	Collector / Anode
2	Cathode	Emitter / Cathode
3	Case	Case

Package # 48

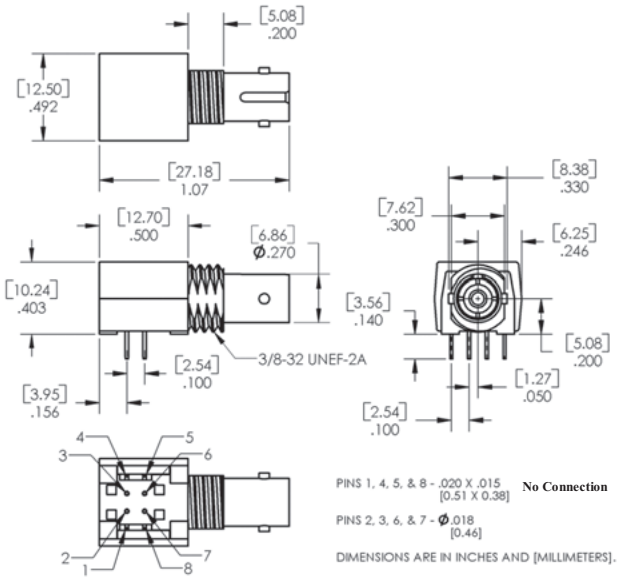

OPF14XX

Pin #	Description	Pin #	Description
2	Anode	6	Anode
3	Cathode	7	Anode

OPF2412

Pin #	Description	Pin #	Description
2	Vcc (5V)	6	Data
3	Common	7	Common

2416

Pin #	Description	Pin #	Description
2	Data	6	Vcc (5V)
3	Common	7	Common

Package # 49

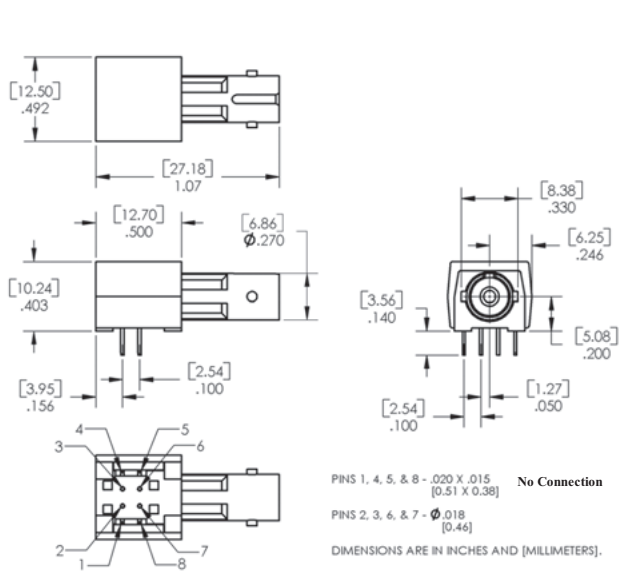

OPF14XX

Pin #	Description	Pin #	Description
2	Anode	6	Anode
3	Cathode	7	Anode

OPF2412

Pin #	Description	Pin #	Description
2	Vcc (5V)	6	Data
3	Common	7	Common

2416

Pin #	Description	Pin #	Description
2	Data	6	Vcc (5V)
3	Common	7	Common

Package # 50

Notes:

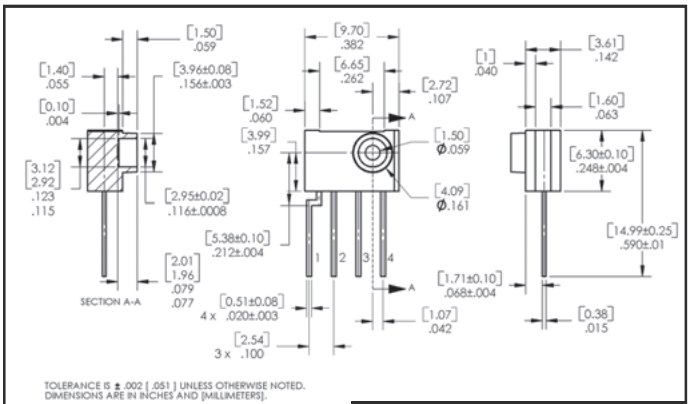

Pin #	Description	Pin #	Description
1	Input	3	Vcc
2	Ground	4	Rext

Package # 53

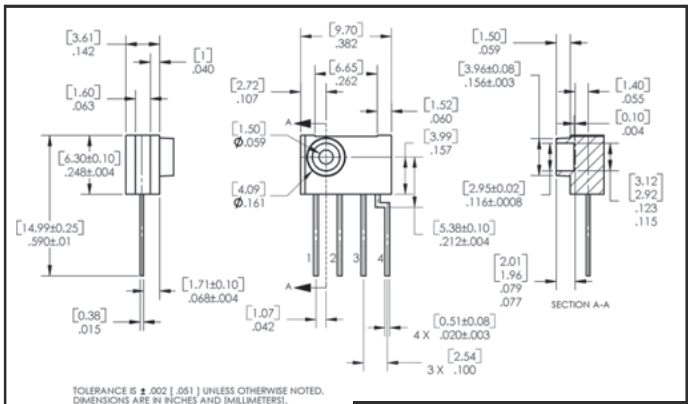

Pin #	Description	Pin #	Description
1	Vcc	3	Status
2	Ground	4	Output

Package # 54

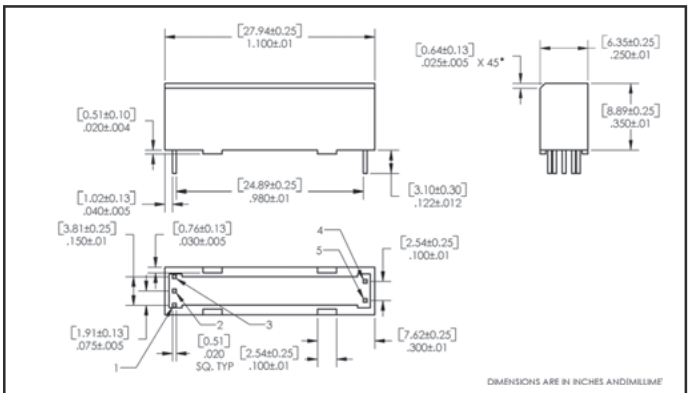

Pin #	Description	Pin #	Description	Pin #	Description
1	Vcc	3	Ground	4	Anode
2	Output			5	Cathode

Package # 55

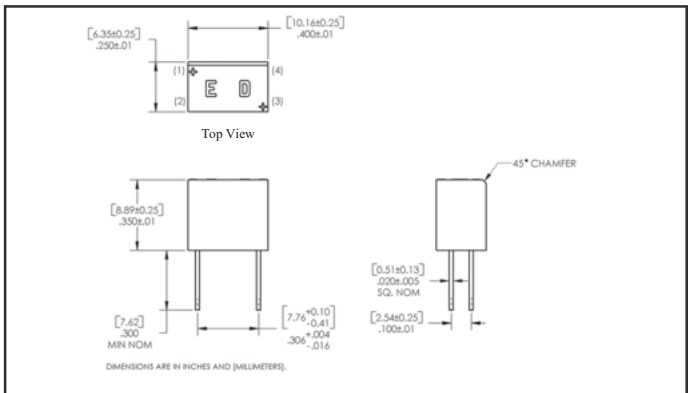

Pin #	LED	Pin #	Transistor
2	Cathode	3	Collector
1	Anode	4	Emitter

Package # 56

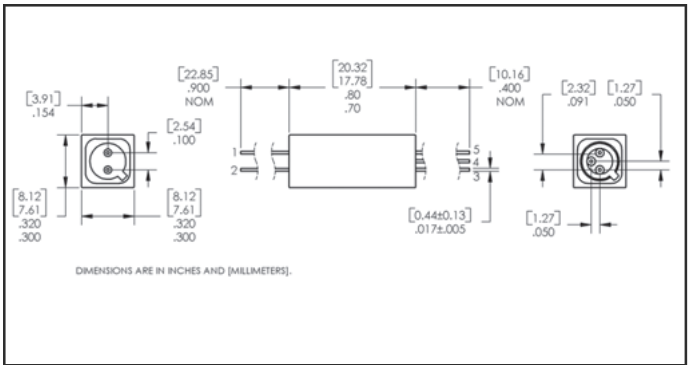

Pin #	LED	Pin #	Transistor	Pin #	Darlington	Pin #	Photologic®
1	Anode	3	Emitter	3	Emitter	3	Output
2	Cathode	4	Base	4	Open	4	Vcc
		5	Collector	5	Collector	5	Ground

Package # 57

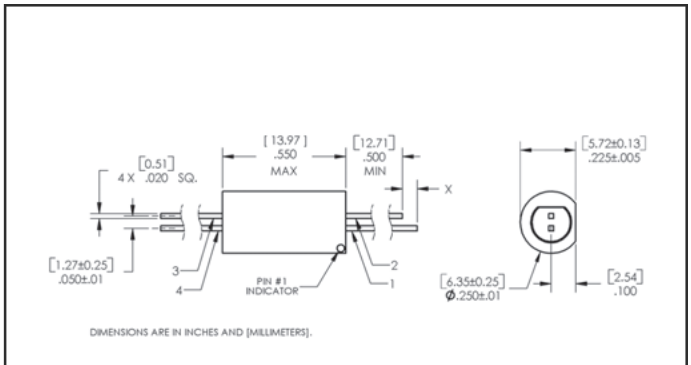

Pin #	LED	Pin #	Transistor
1	Anode	4	Collector
2	Cathode	3	Emitter

Package # 58

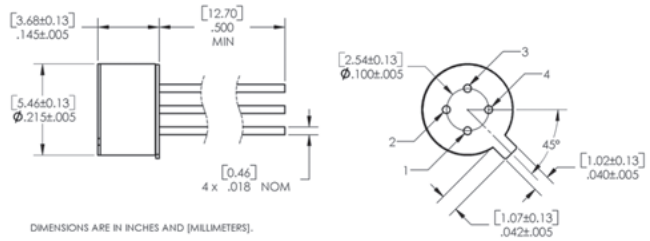

Pin #	LED	Pin #	Transistor
2	Anode	1	Emitter
3	Cathode	4	Collector

Package # 59

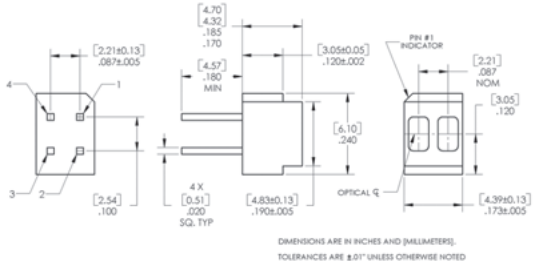

Pin #	LED	Pin #	Transistor
3	Anode	1	Collector
4	Cathode	2	Emitter

Package # 60

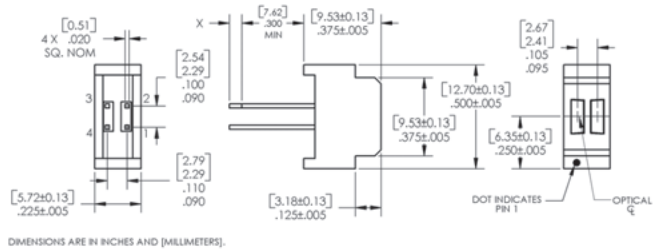

Pin #	LED	Pin #	Transistor
1	Anode	3	Collector
2	Cathode	4	Emitter

Package # 61

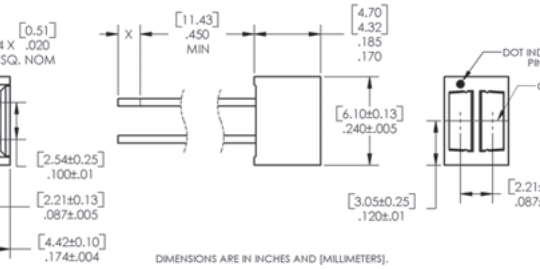

Pin #	LED	Pin #	Transistor
3	Anode	1	Collector
4	Cathode	2	Emitter

Package # 62

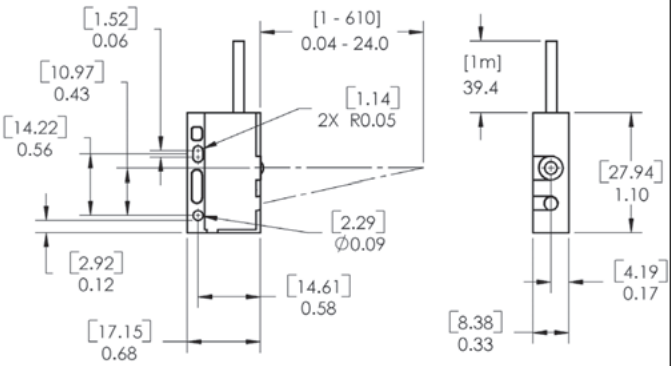

Pin #	Description	Pin #	Description	Pin #	Description
Red	Vcc	White	Output	Black	Ground

Package # 63

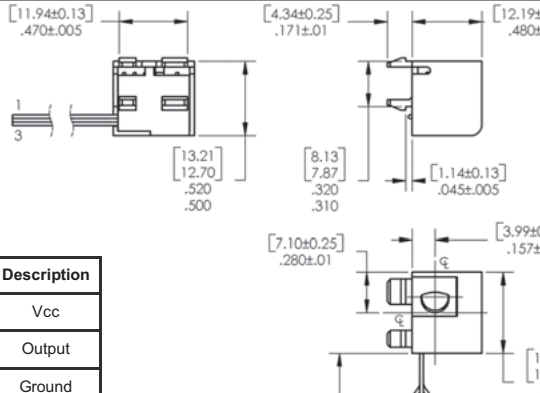

Color	Description
Orange	Vcc
White	Output
Violet	Ground

Package # 64

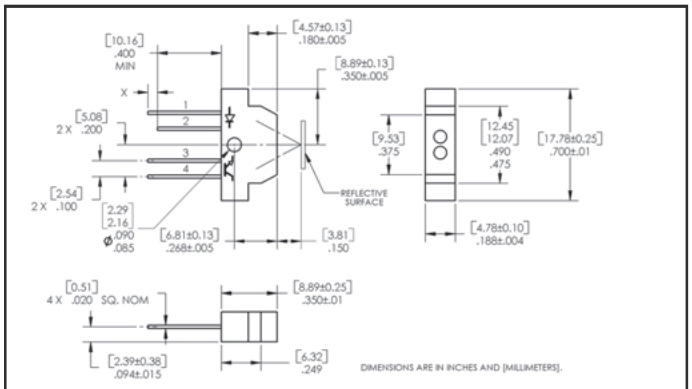

Pin #	LED	Pin #	Transistor
1	Cathode	3	Emitter
2	Anode	4	Collector

Package # 65

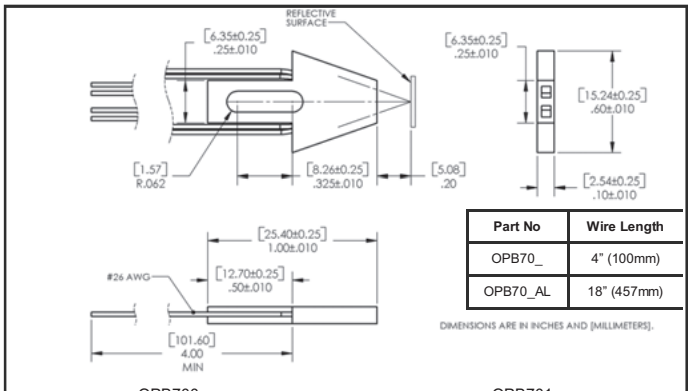

Part No	Wire Length
OPB70_	4" (100mm)
OPB70_AL	18" (457mm)

OPB700

Color	LED	Color	Transistor
Orange	Anode	White	Collector
Green	Cathode	Blue	Emitter

OPB701

Color	LED	Color	Transistor
Red	Anode	White	Collector
Black	Cathode	Green	Emitter

Package # 66

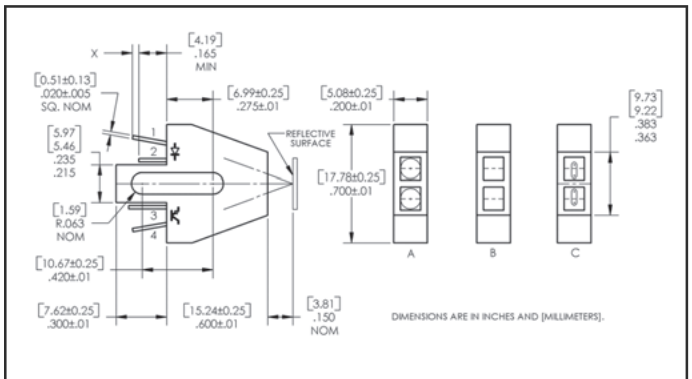

Pin #	LED	Pin #	Transistor
1	Anode	4	Collector
2	Cathode	3	Emitter

Package # 67

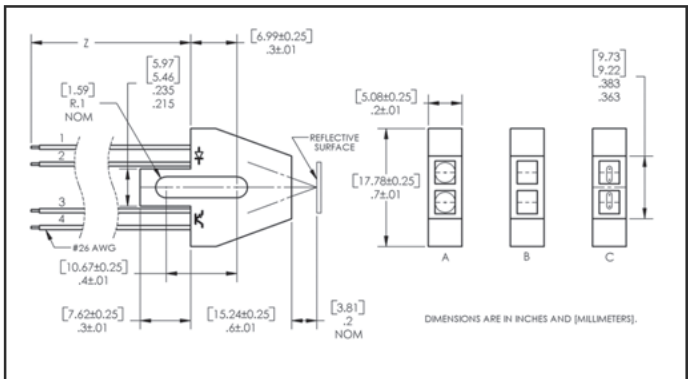

Color	LED	Color	Transistor
Orange-1	Anode	White-4	Collector
Green-2	Cathode	Blue-3	Emitter

Package # 68

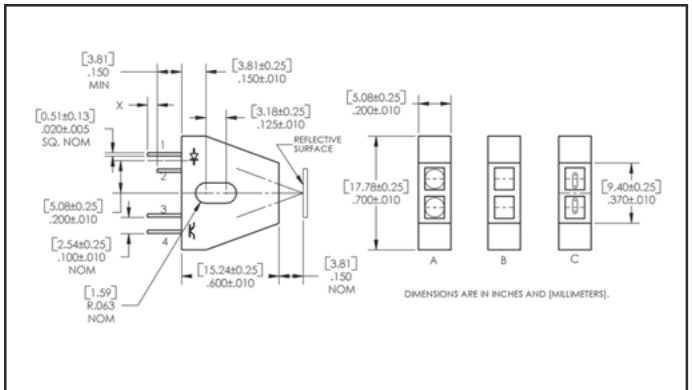

Pin #	LED	Pin #	Transistor
1	Anode	4	Collector
2	Cathode	3	Emitter

Package # 69

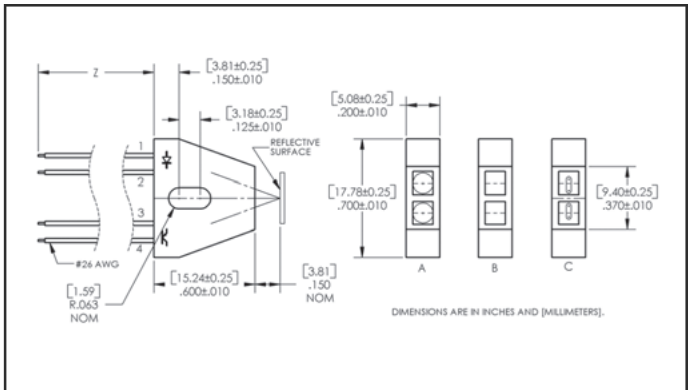

Part No	Wire Length
OPB70_W	4" (100mm)
OPB70_W24	24" (610mm)

Color	LED	Color	Transistor
Orange-1	Anode	White-4	Collector
Green-2	Cathode	Blue-3	Emitter

Package # 70

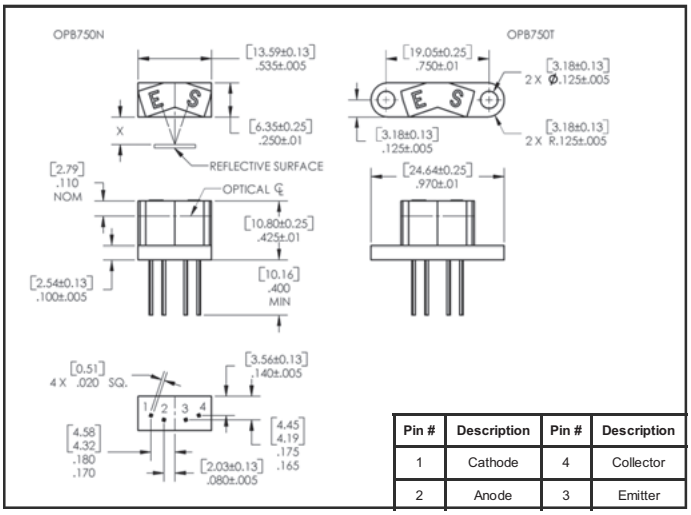

Pin #	Description	Pin #	Description
1	Cathode	4	Collector
2	Anode	3	Emitter

Package # 71

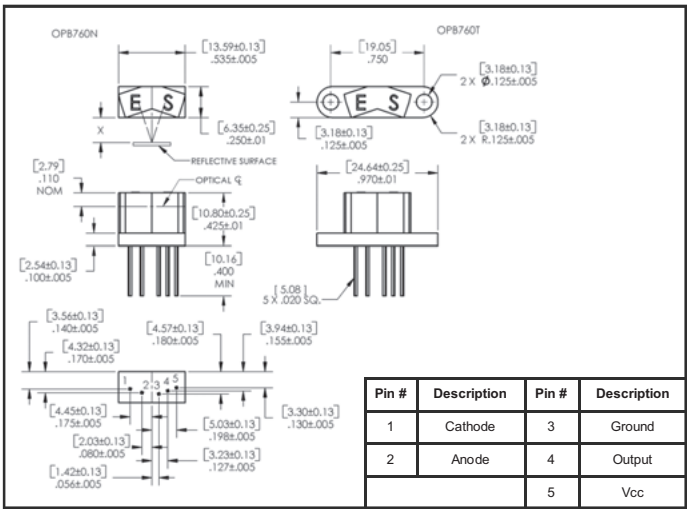

Pin #	Description	Pin #	Description
1	Cathode	3	Ground
2	Anode	4	Output
		5	Vcc

Package # 72

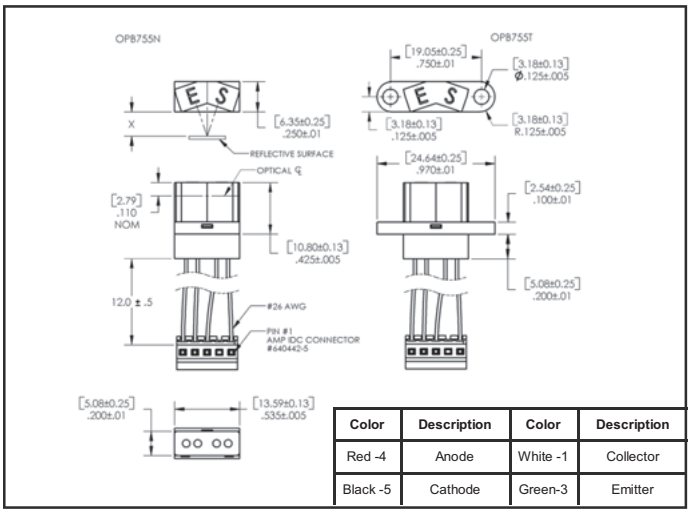

Color	Description	Color	Description
Red -4	Anode	White -1	Collector
Black -5	Cathode	Green-3	Emitter

Package # 73

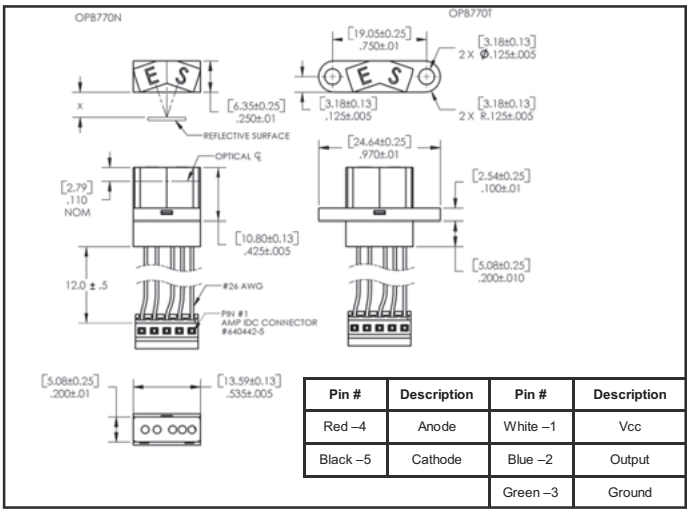

Pin #	Description	Pin #	Description
Red –4	Anode	White –1	Vcc
Black –5	Cathode	Blue –2	Output
		Green –3	Ground

Package # 74

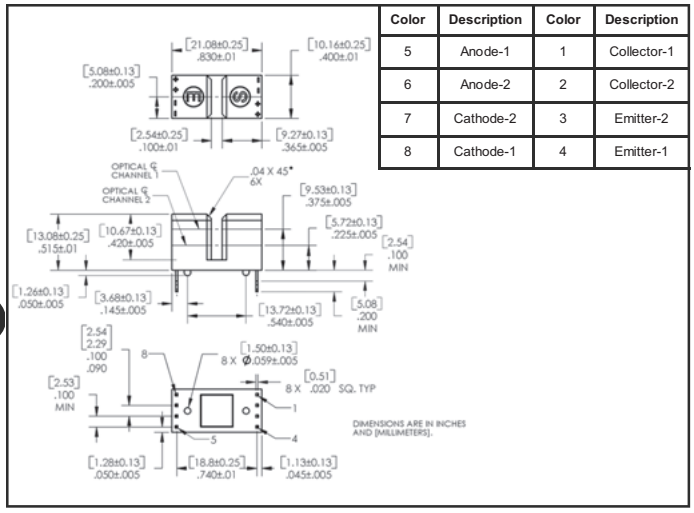

Color	Description	Color	Description
5	Anode-1	1	Collector-1
6	Anode-2	2	Collector-2
7	Cathode-2	3	Emitter-2
8	Cathode-1	4	Emitter-1

Package # 75

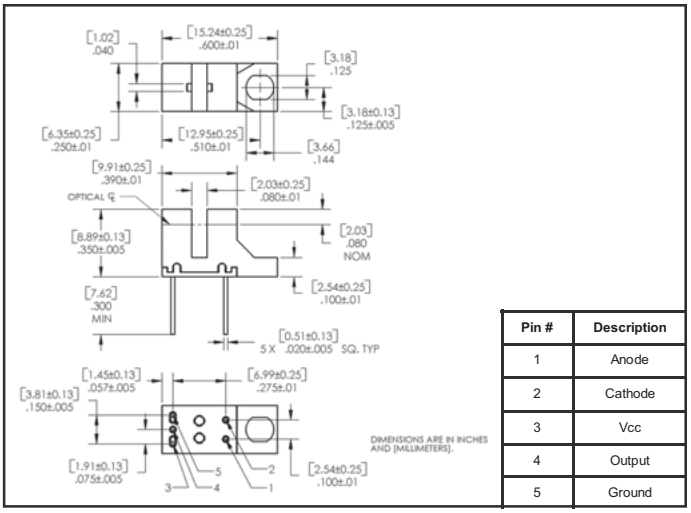

Pin #	Description
1	Anode
2	Cathode
3	Vcc
4	Output
5	Ground

Package # 76

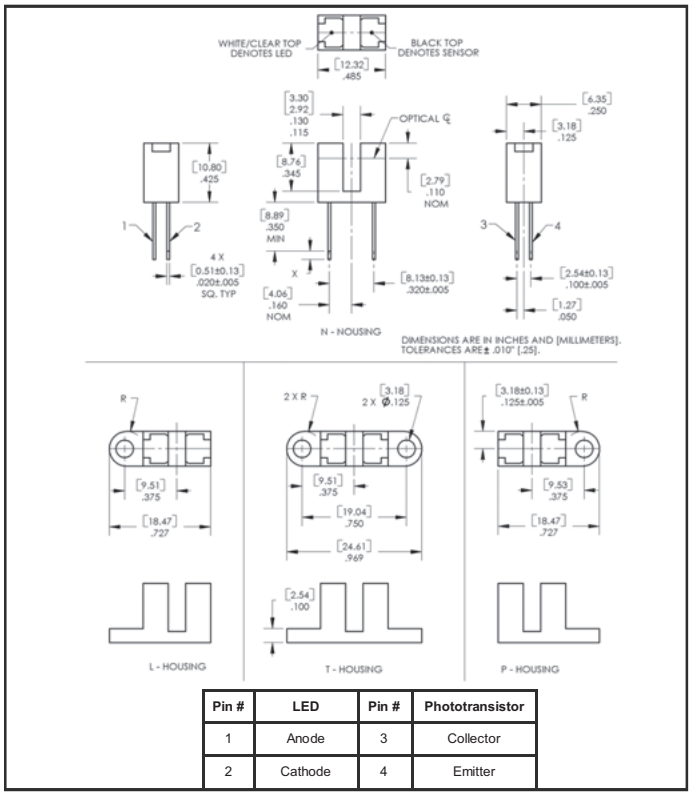

Pin #	LED	Pin #	Phototransistor
1	Anode	3	Collector
2	Cathode	4	Emitter

Package # 77

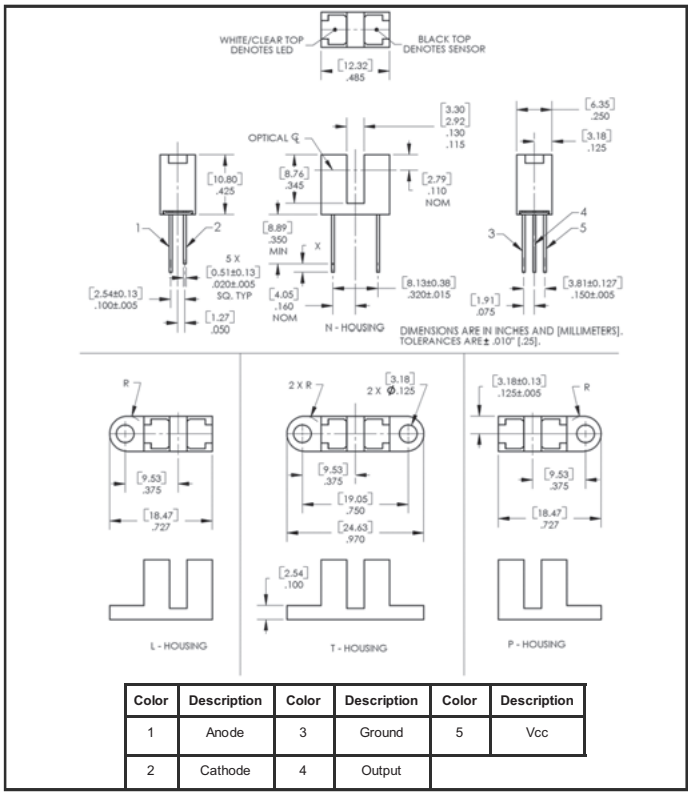

Color	Description	Color	Description	Color	Description
1	Anode	3	Ground	5	Vcc
2	Cathode	4	Output		

Package # 78

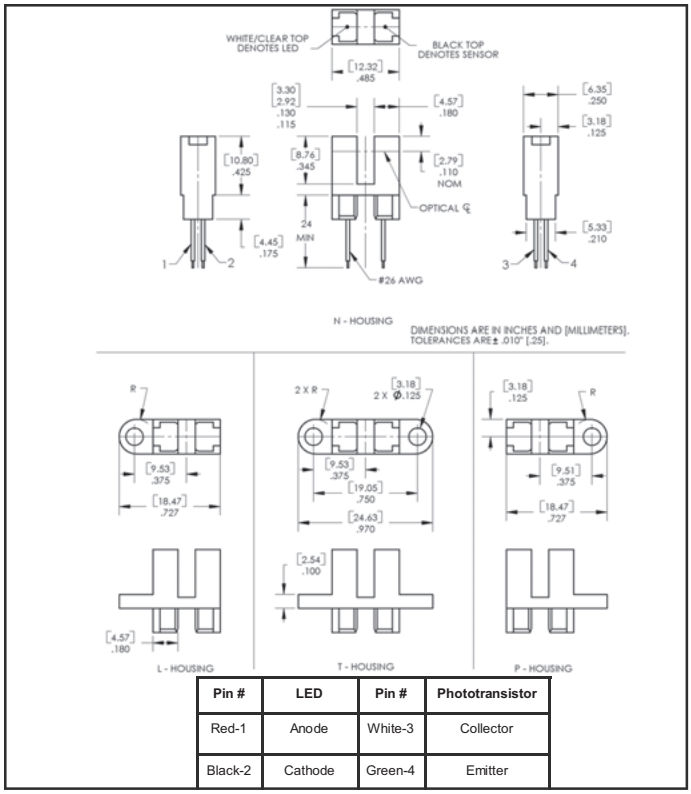

Pin #	LED	Pin #	Phototransistor
Red-1	Anode	White-3	Collector
Black-2	Cathode	Green-4	Emitter

Package # 79

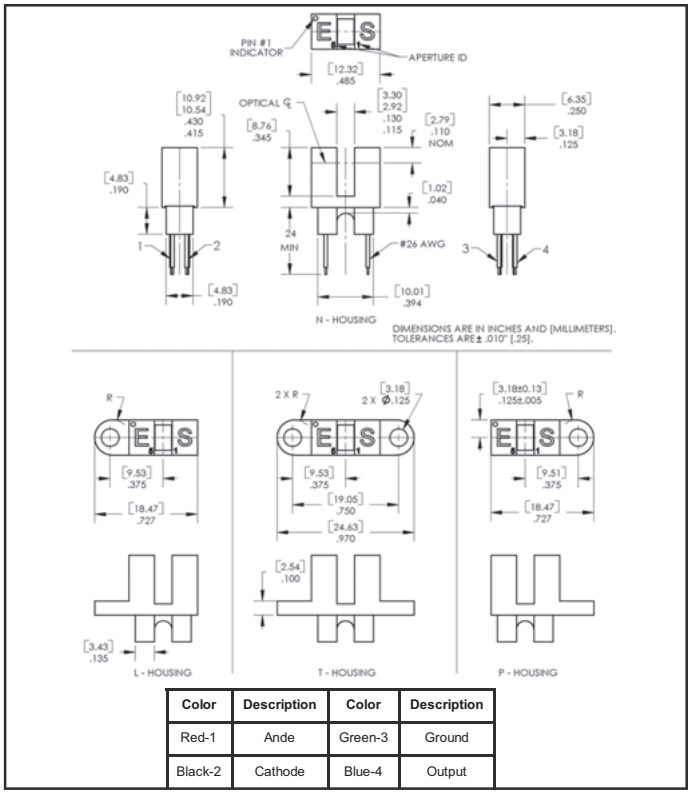

Color	Description	Color	Description
Red-1	Ande	Green-3	Ground
Black-2	Cathode	Blue-4	Output

Package # 80

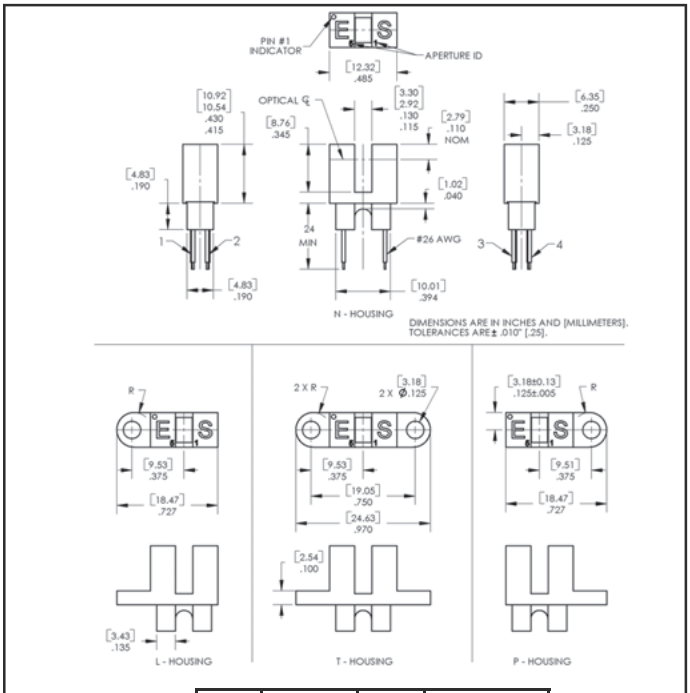

Pin #	LED	Pin #	Phototransistor
Red-1	Anode	White-3	Collector
Black-2	Cathode	Green-4	Emitter

Package # 81

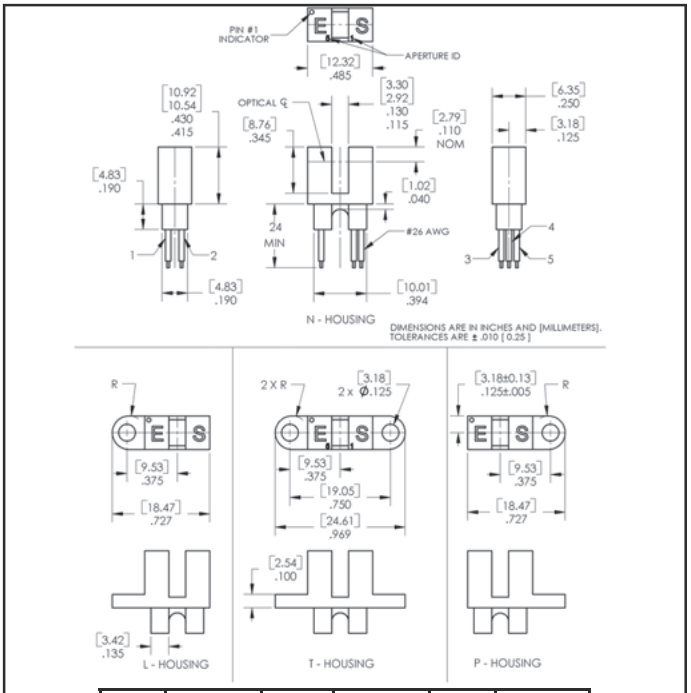

Color	Description	Color	Description	Color	Description
Red-1	Anode	Green-3	Ground	White-5	Vcc
Black-2	Cathode	Blue-4	Output		

Package # 82

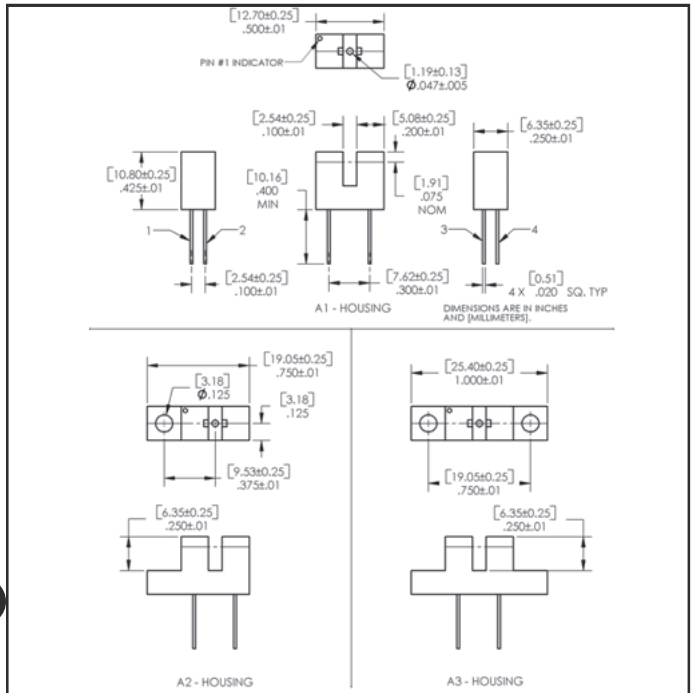

Pin #	LED	Pin #	Phototransistor
1	Anode	4	Collector
2	Cathode	3	Emitter

Package # 83

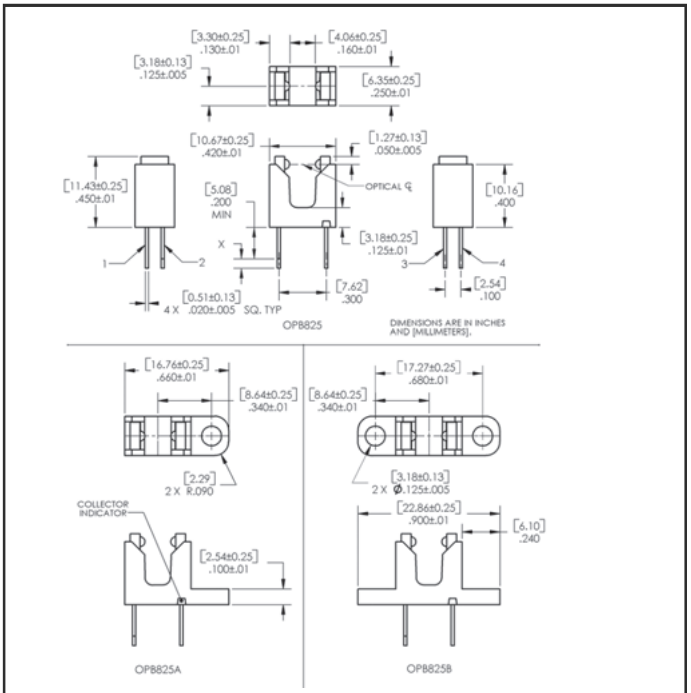

Pin #	LED	Pin #	Phototransistor
1	Anode	3	Collector
2	Cathode	4	Emitter

Package # 84

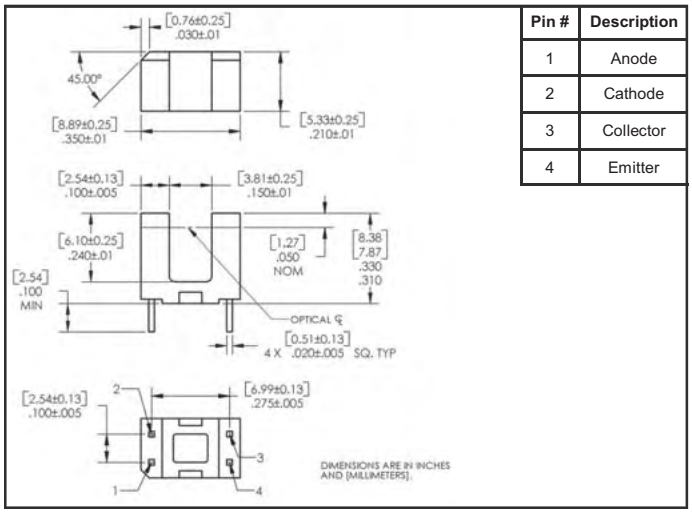

Pin #	Description
1	Anode
2	Cathode
3	Collector
4	Emitter

Package # 85

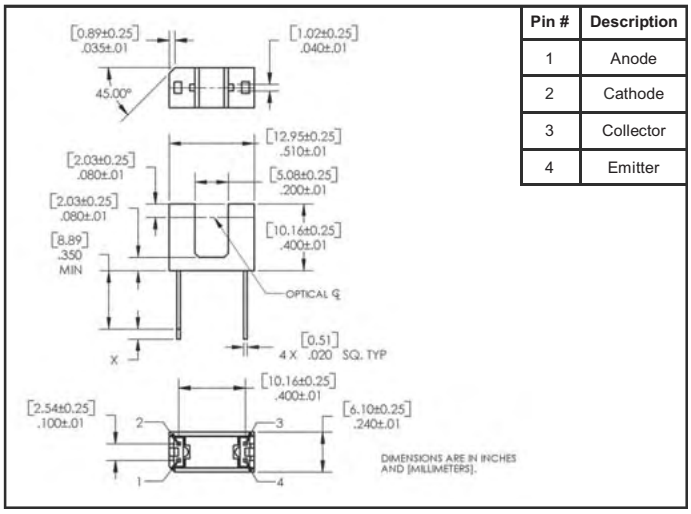

Pin #	Description
1	Anode
2	Cathode
3	Collector
4	Emitter

Package # 86

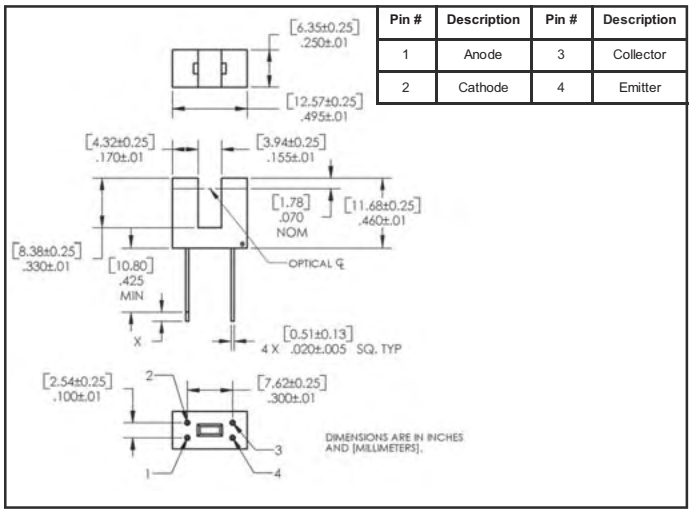

Pin #	Description	Pin #	Description
1	Anode	3	Collector
2	Cathode	4	Emitter

Package # 87

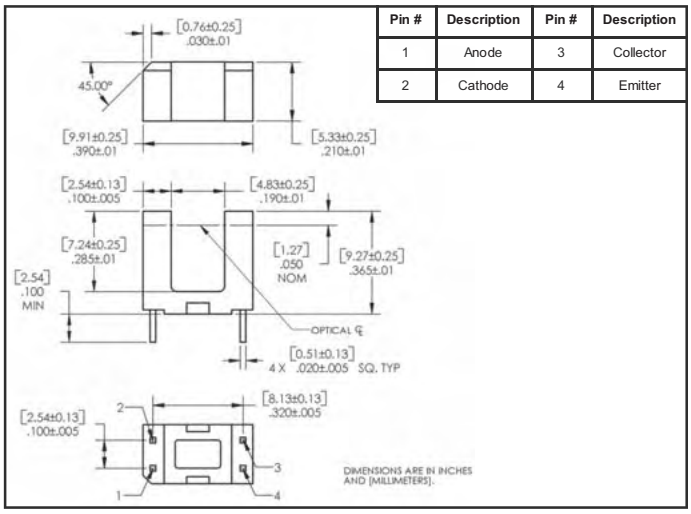

Pin #	Description	Pin #	Description
1	Anode	3	Collector
2	Cathode	4	Emitter

Package # 88

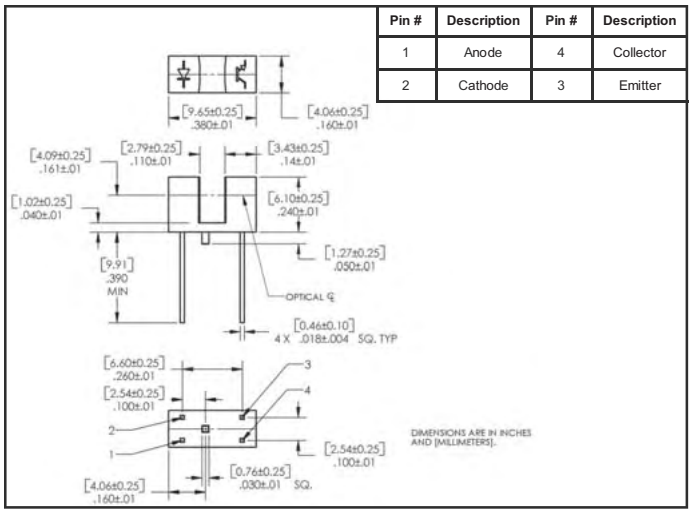

Pin #	Description	Pin #	Description
1	Anode	4	Collector
2	Cathode	3	Emitter

Package # 89

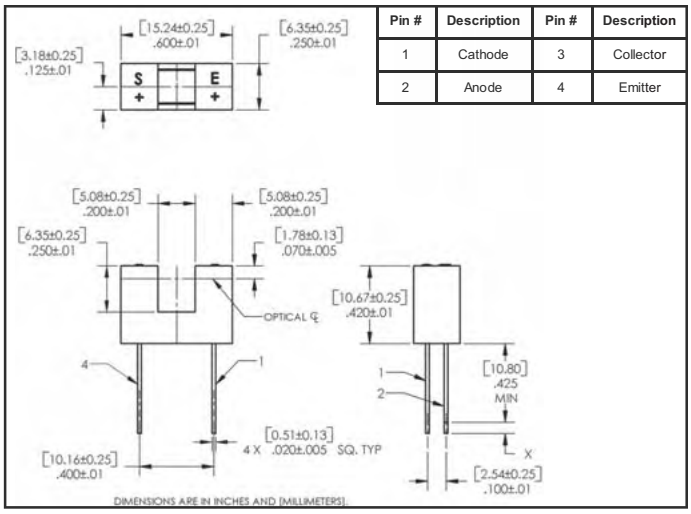

Pin #	Description	Pin #	Description
1	Cathode	3	Collector
2	Anode	4	Emitter

Package # 90

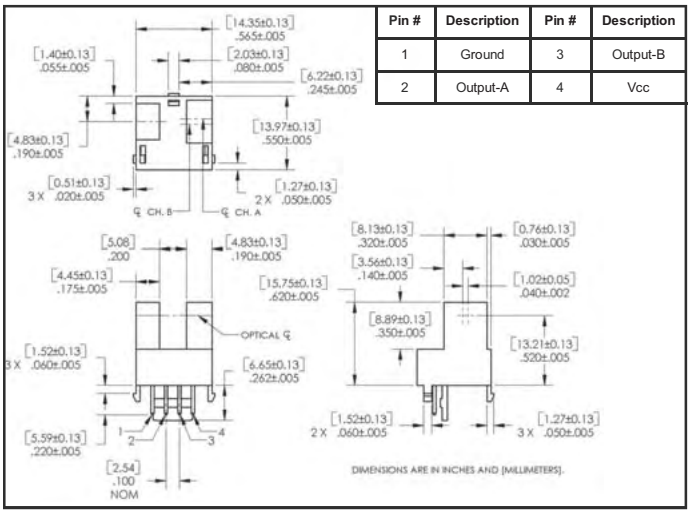

Pin #	Description	Pin #	Description
1	Ground	3	Output-B
2	Output-A	4	Vcc

Package # 91

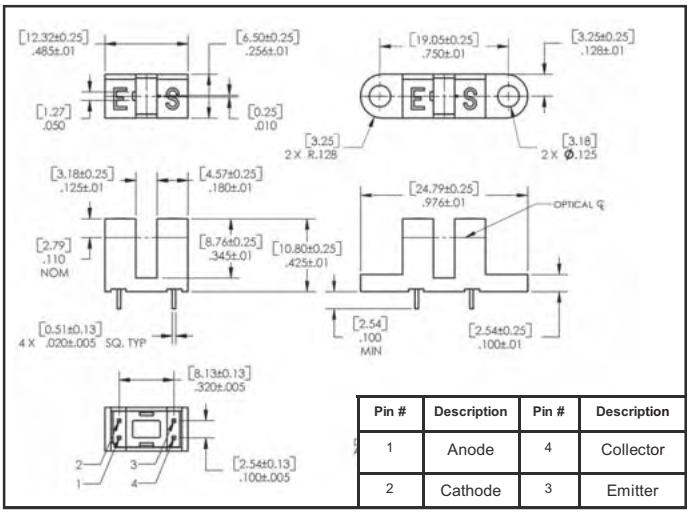

Pin #	Description	Pin #	Description
1	Anode	4	Collector
2	Cathode	3	Emitter

Package # 92

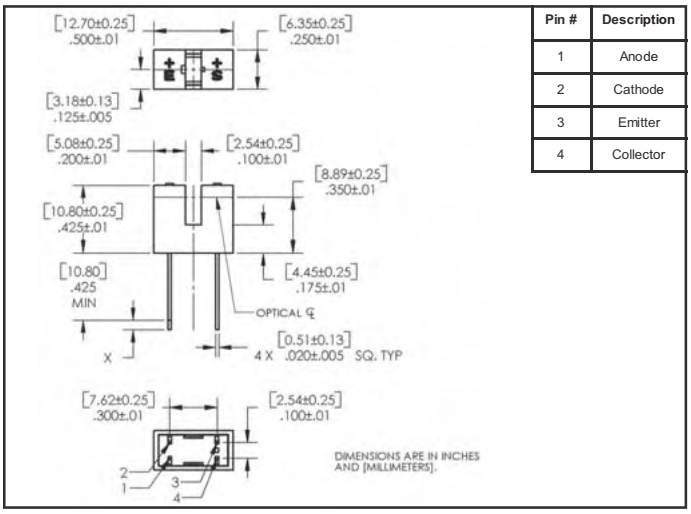

Pin #	Description
1	Anode
2	Cathode
3	Emitter
4	Collector

Package # 93

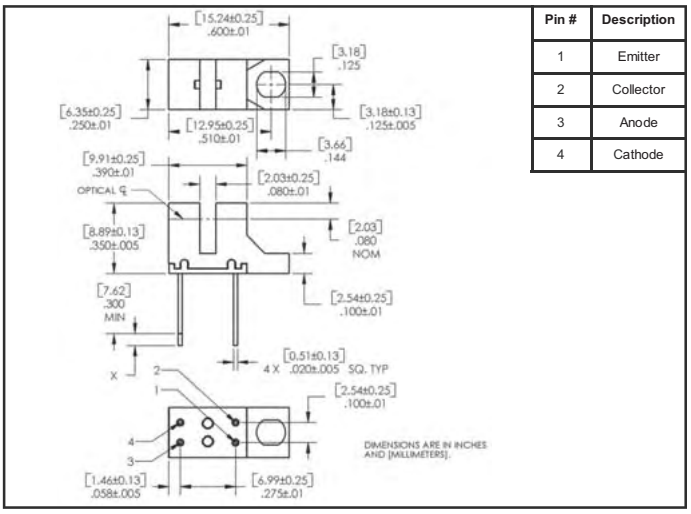

Pin #	Description
1	Emitter
2	Collector
3	Anode
4	Cathode

Package # 94

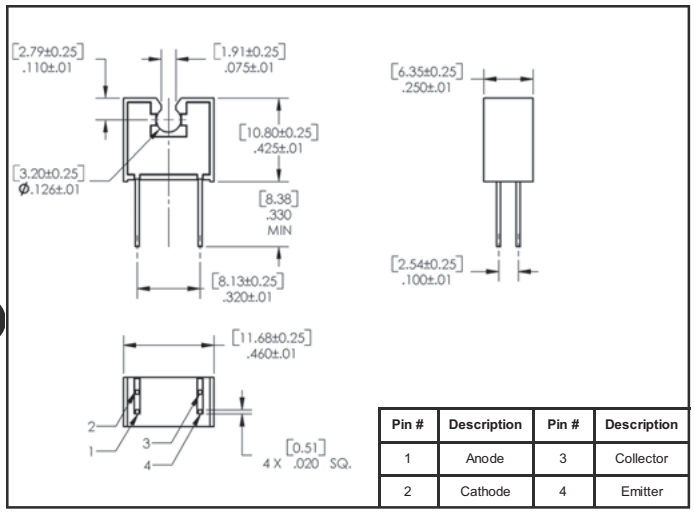

Pin #	Description	Pin #	Description
1	Anode	3	Collector
2	Cathode	4	Emitter

Package # 95

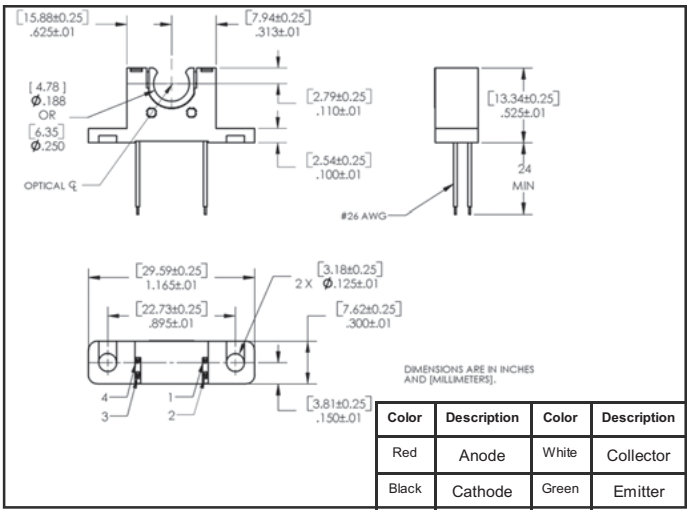

Color	Description	Color	Description
Red	Anode	White	Collector
Black	Cathode	Green	Emitter

Package # 96

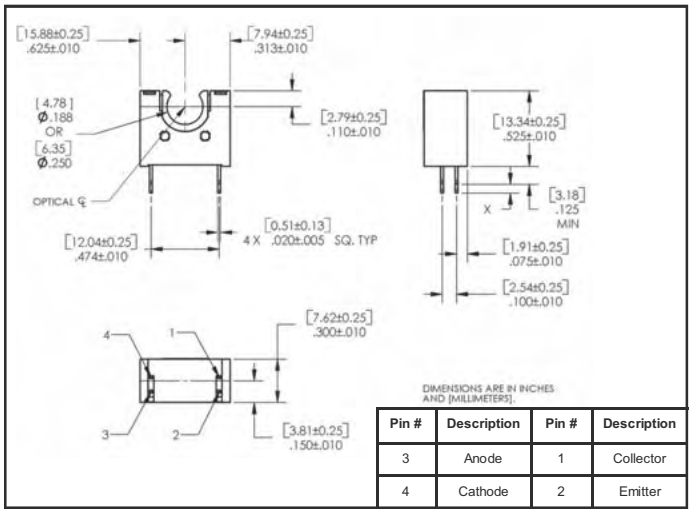

Pin #	Description	Pin #	Description
3	Anode	1	Collector
4	Cathode	2	Emitter

Package # 97

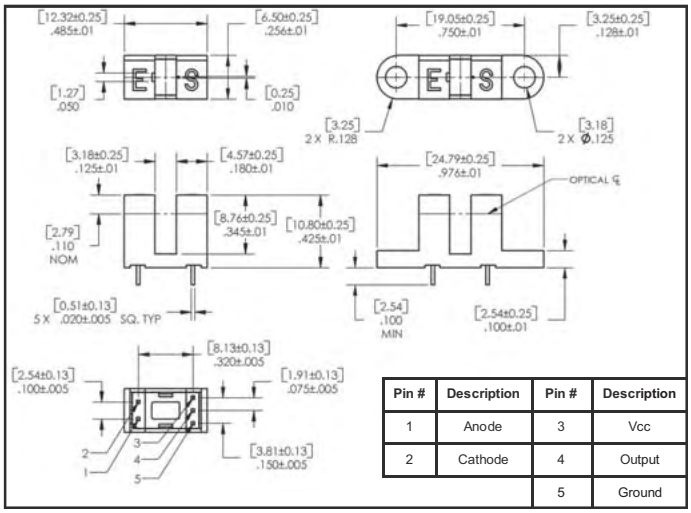

Pin #	Description	Pin #	Description
1	Anode	3	Vcc
2	Cathode	4	Output
		5	Ground

Package # 98

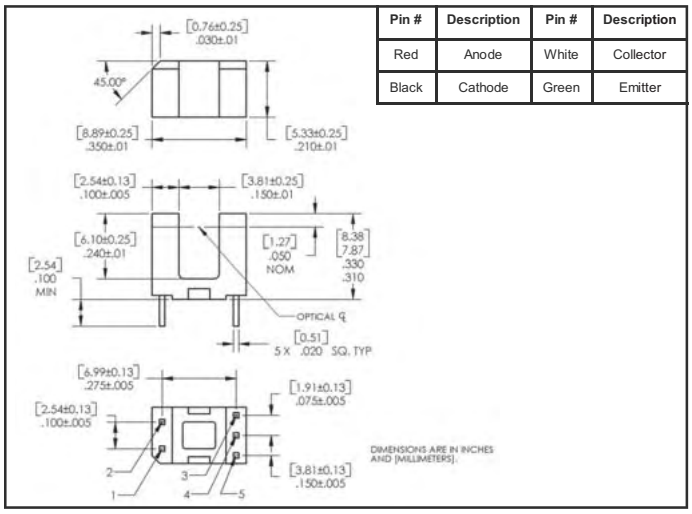

Pin #	Description	Pin #	Description
Red	Anode	White	Collector
Black	Cathode	Green	Emitter

Package # 99

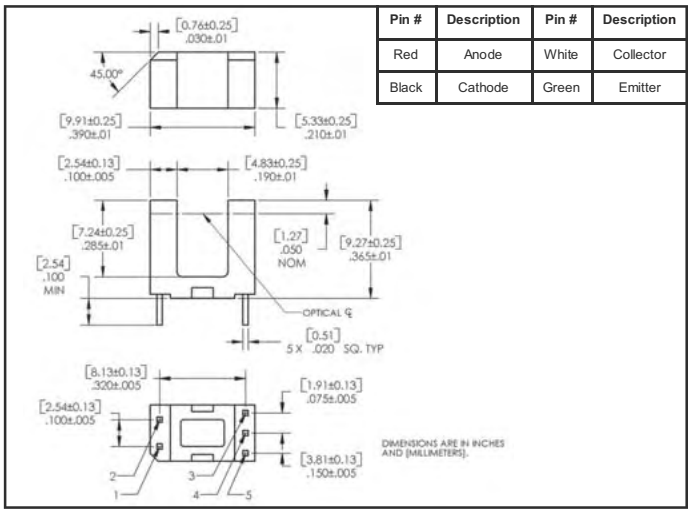

Pin #	Description	Pin #	Description
Red	Anode	White	Collector
Black	Cathode	Green	Emitter

Package # 100

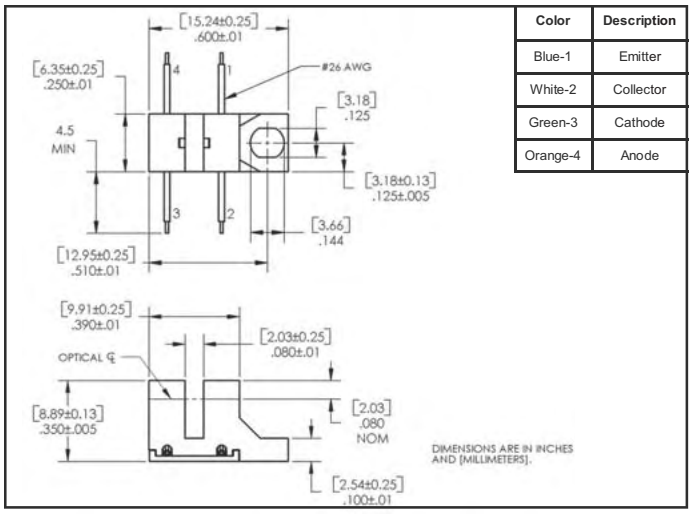

Color	Description
Blue-1	Emitter
White-2	Collector
Green-3	Cathode
Orange-4	Anode

Package # 101

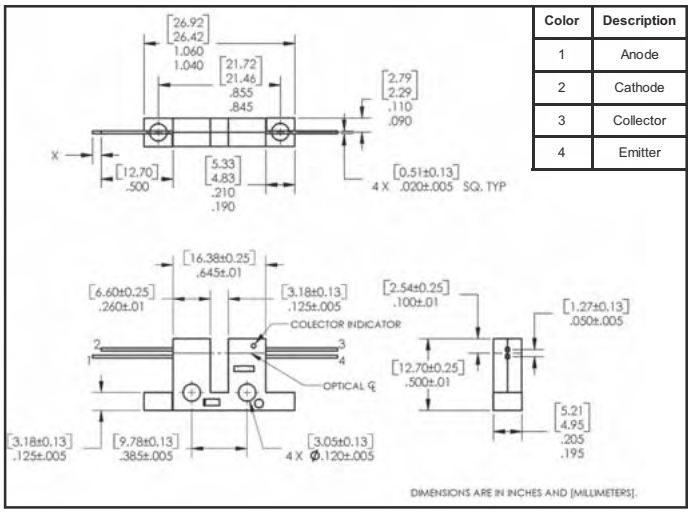

Color	Description
1	Anode
2	Cathode
3	Collector
4	Emitter

Package # 102

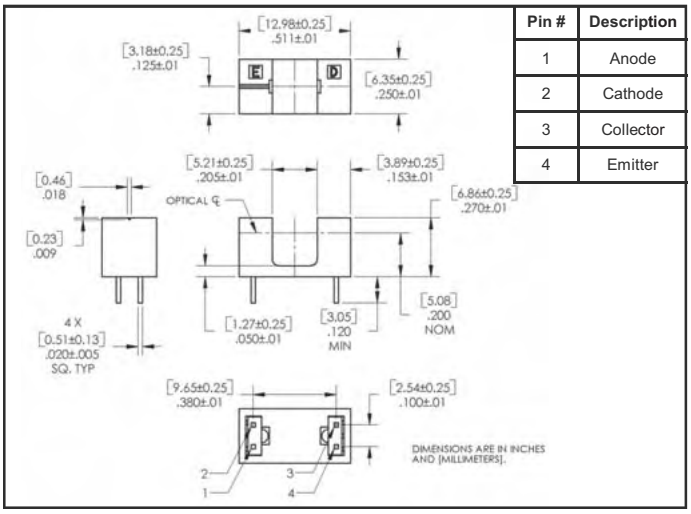

Pin #	Description
1	Anode
2	Cathode
3	Collector
4	Emitter

Package # 103

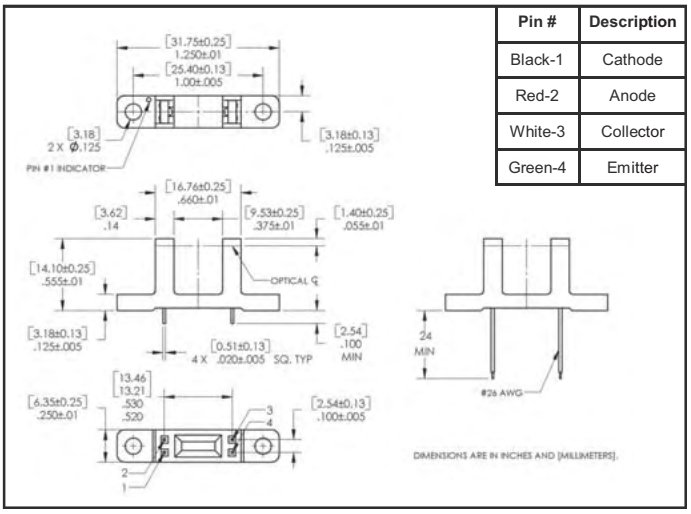

Pin #	Description
Black-1	Cathode
Red-2	Anode
White-3	Collector
Green-4	Emitter

Package # 104

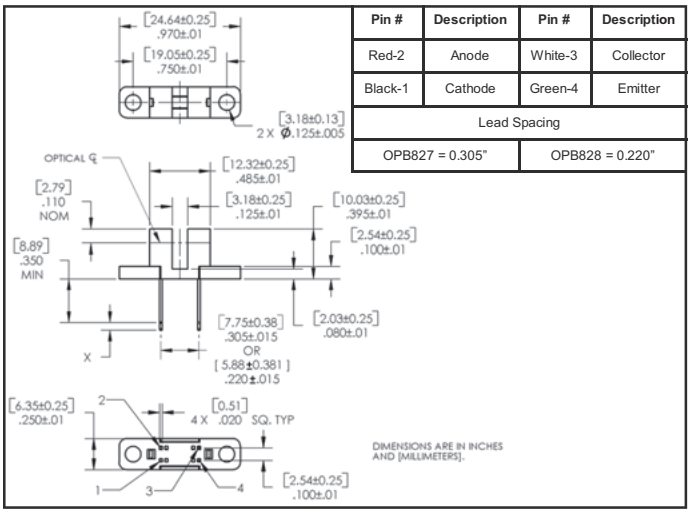

Pin #	Description	Pin #	Description
Red-2	Anode	White-3	Collector
Black-1	Cathode	Green-4	Emitter
Lead Spacing			
OPB827 = 0.305"		OPB828 = 0.220"	

Package # 105

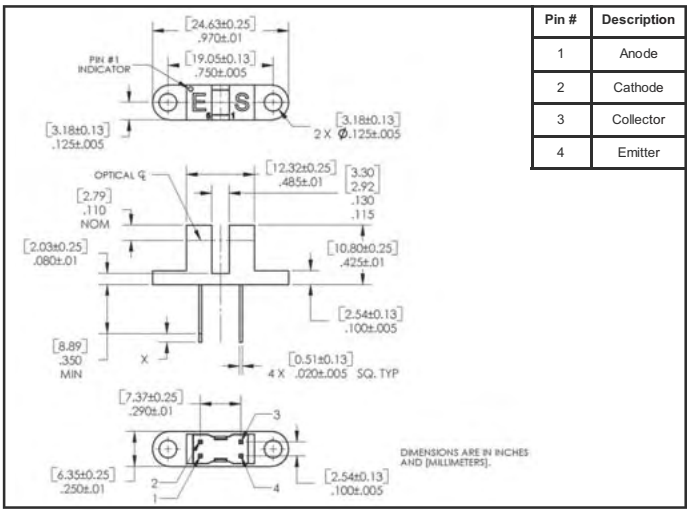

Pin #	Description
1	Anode
2	Cathode
3	Collector
4	Emitter

Package # 106

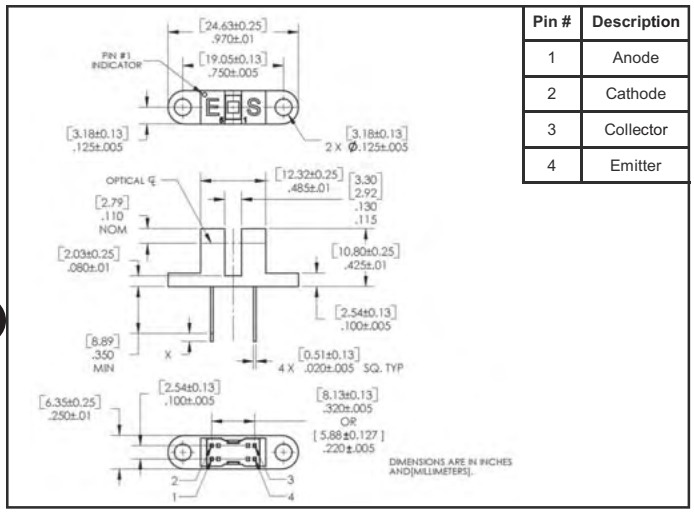

Pin #	Description
1	Anode
2	Cathode
3	Collector
4	Emitter

Package # 107

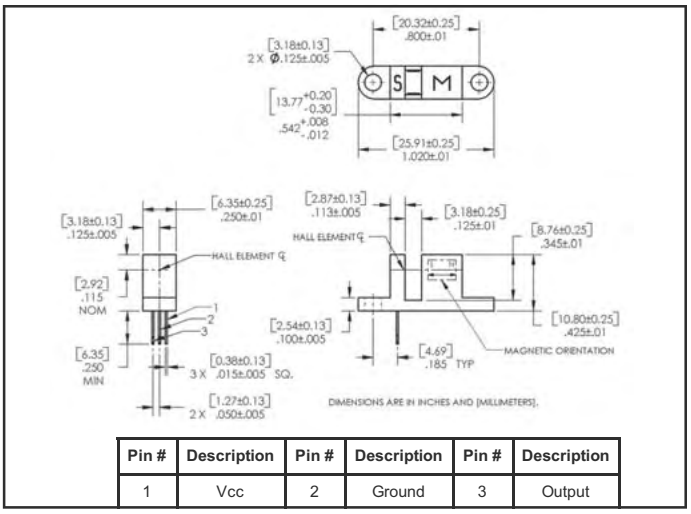

Pin #	Description	Pin #	Description	Pin #	Description
1	Vcc	2	Ground	3	Output

Package # 108

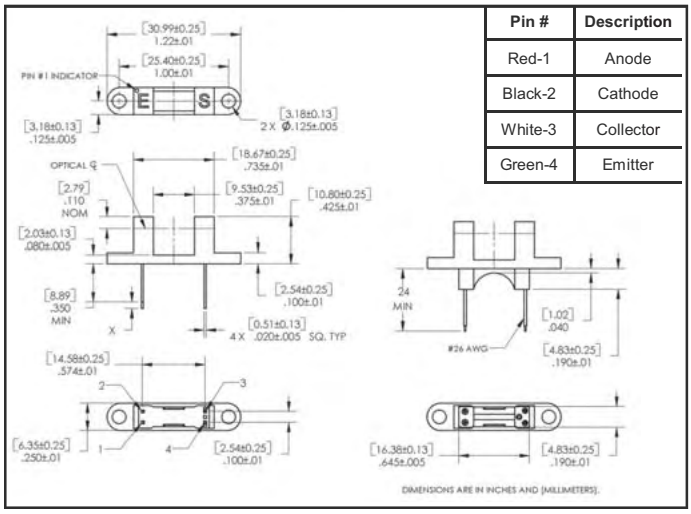

Pin #	Description
Red-1	Anode
Black-2	Cathode
White-3	Collector
Green-4	Emitter

Package # 109

Pin #	LED
1	Anode
2	Cathode

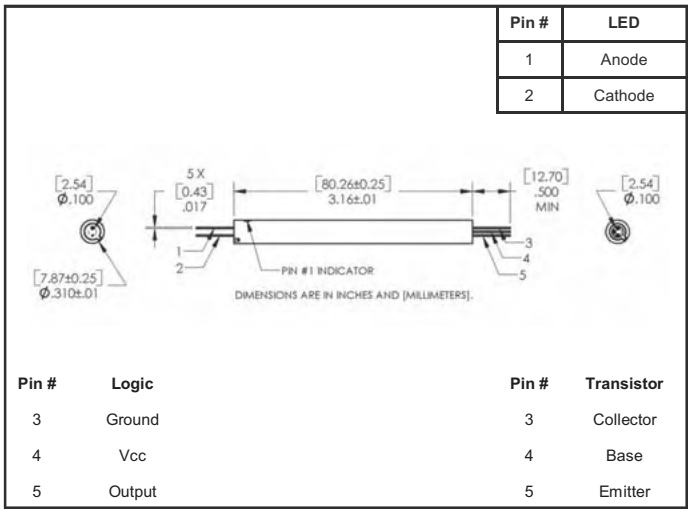

Pin #	Logic	Pin #	Transistor
3	Ground	3	Collector
4	Vcc	4	Base
5	Output	5	Emitter

Package # 110

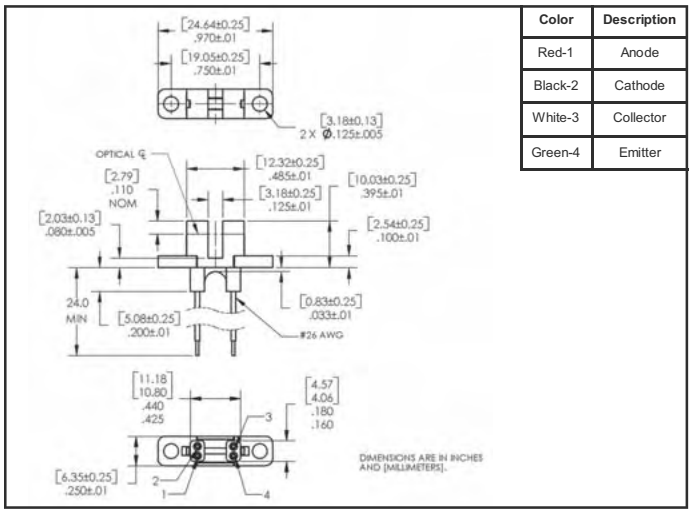

Color	Description
Red-1	Anode
Black-2	Cathode
White-3	Collector
Green-4	Emitter

Package # 111

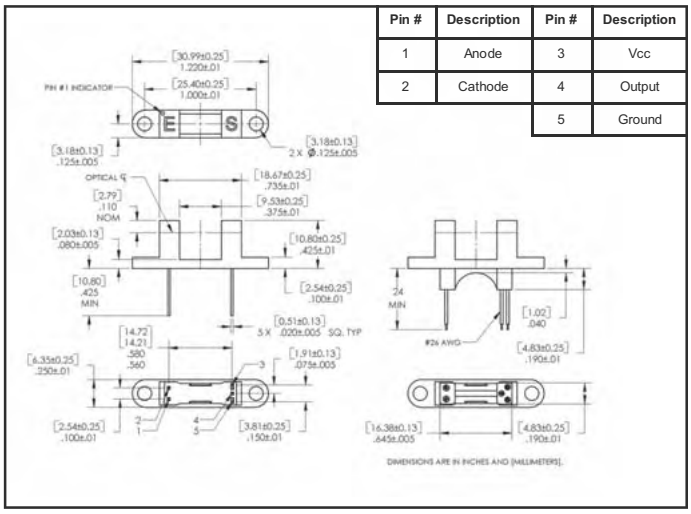

Pin #	Description	Pin #	Description
1	Anode	3	Vcc
2	Cathode	4	Output
		5	Ground

Package # 112

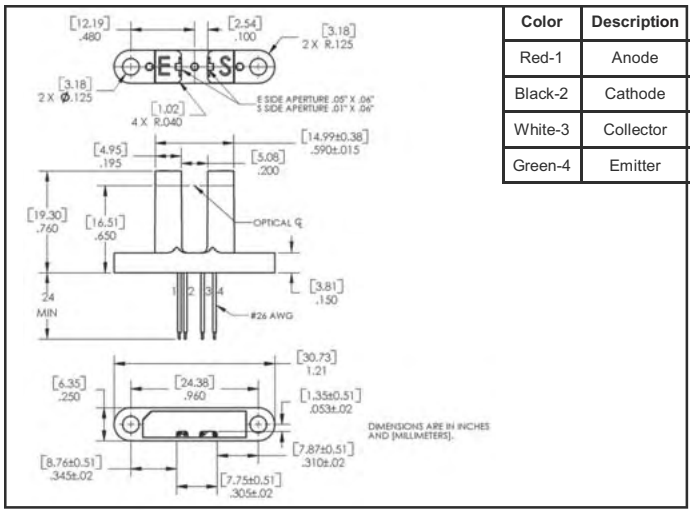

Color	Description
Red-1	Anode
Black-2	Cathode
White-3	Collector
Green-4	Emitter

Package # 113

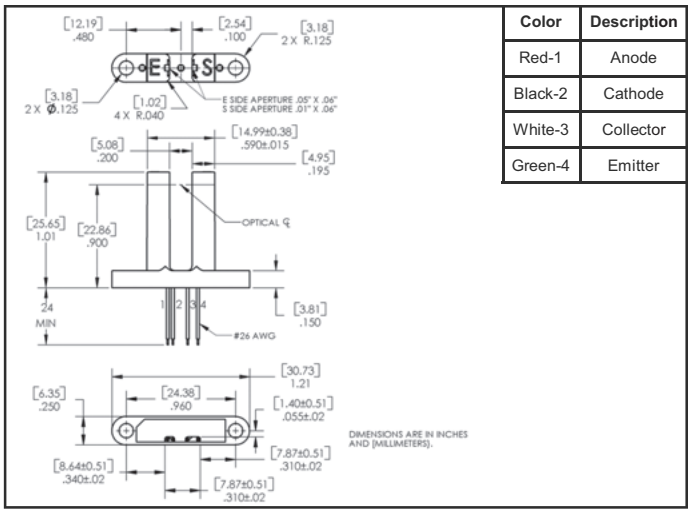

Color	Description
Red-1	Anode
Black-2	Cathode
White-3	Collector
Green-4	Emitter

Package # 114

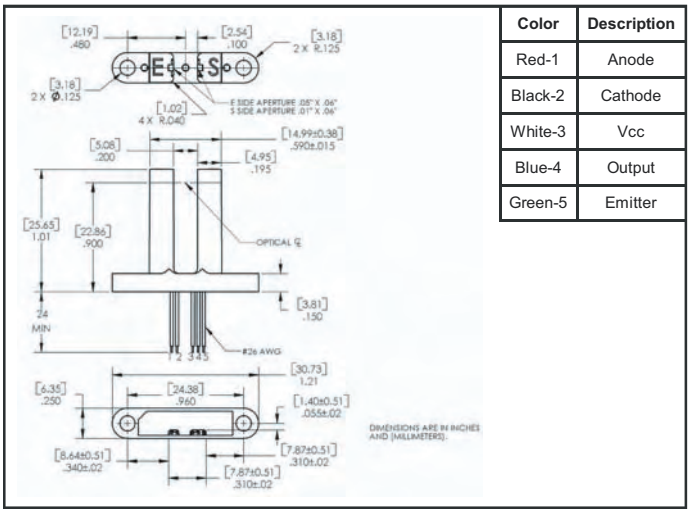

Color	Description
Red-1	Anode
Black-2	Cathode
White-3	Vcc
Blue-4	Output
Green-5	Emitter

Package # 115

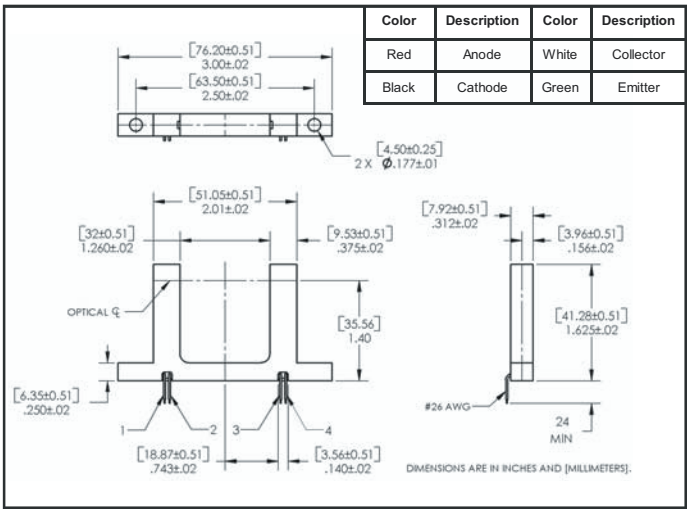

Color	Description	Color	Description
Red	Anode	White	Collector
Black	Cathode	Green	Emitter

Package # 116

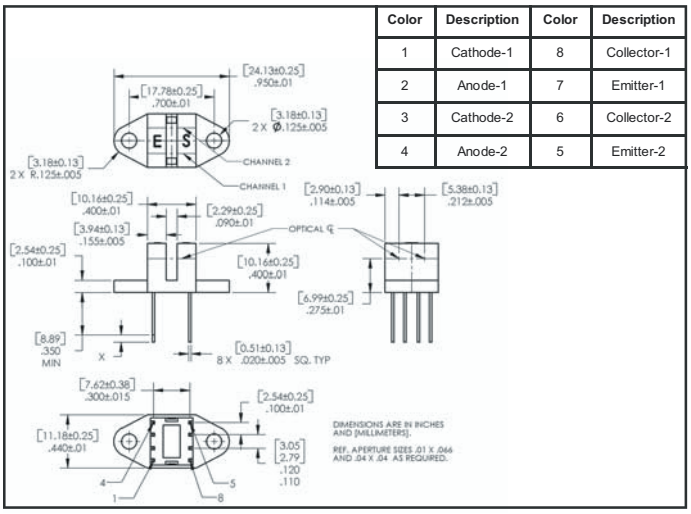

Color	Description	Color	Description
1	Cathode-1	8	Collector-1
2	Anode-1	7	Emitter-1
3	Cathode-2	6	Collector-2
4	Anode-2	5	Emitter-2

Package # 117

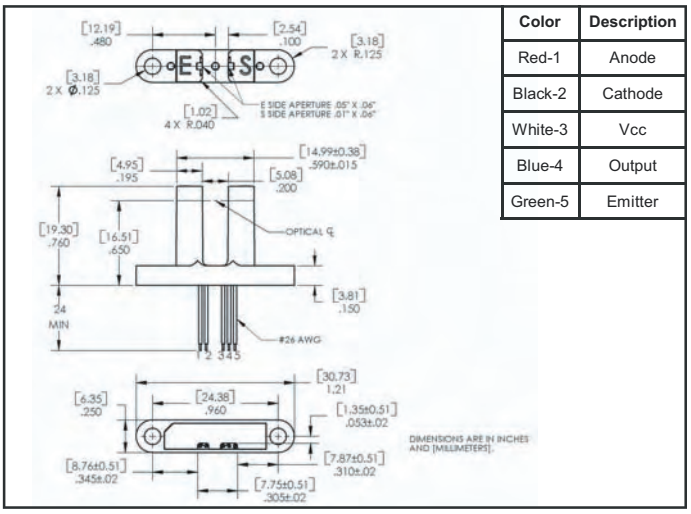

Color	Description
Red-1	Anode
Black-2	Cathode
White-3	Vcc
Blue-4	Output
Green-5	Emitter

Package # 118

Color	Description	Color	Description
Red	Anode	White	Vcc
Black	Cathode	Blue	Output
		Green	Ground

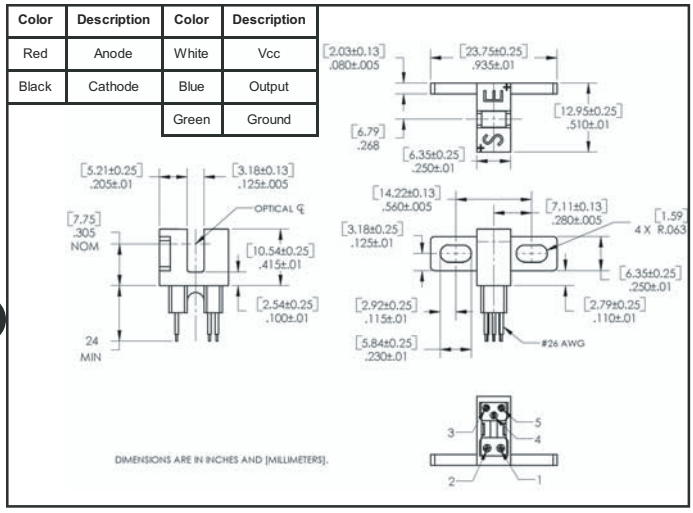

Package # 119

Pin #	Description	Pin #	Description
1	Anode	3	Collector
2	Cathode	4	Emitter

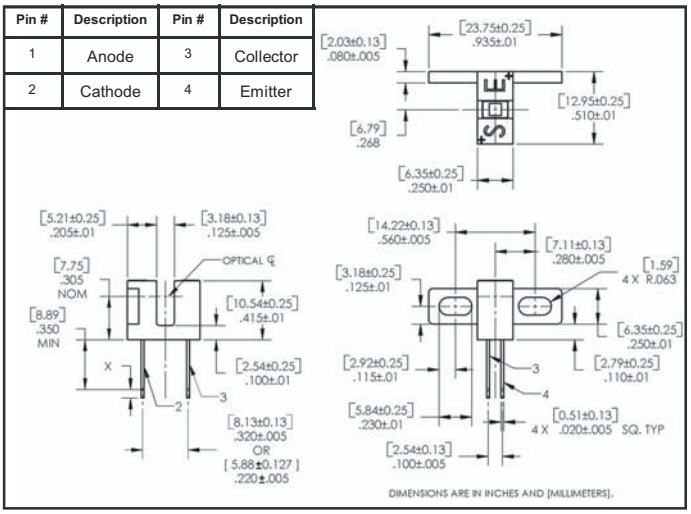

Package # 120

Color	Description
Red	Anode
Black-2	Cathode
White-3	Collector
Green-4	Emitter

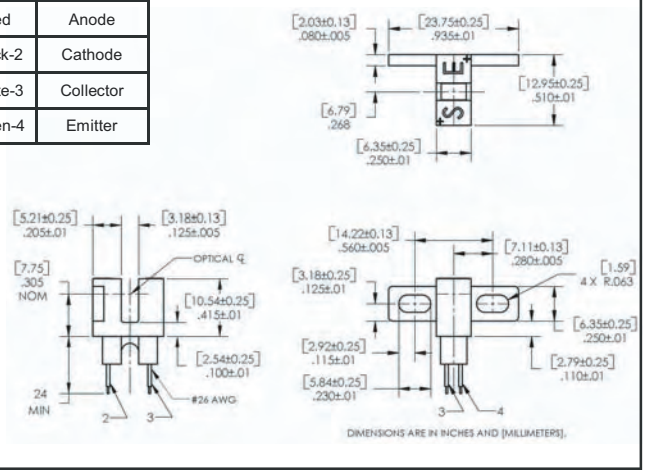

Package # 121

Pin #	Description	Pin #	Description
1	Anode	3	Vcc
2	Cathode	4	Output
		5	Ground

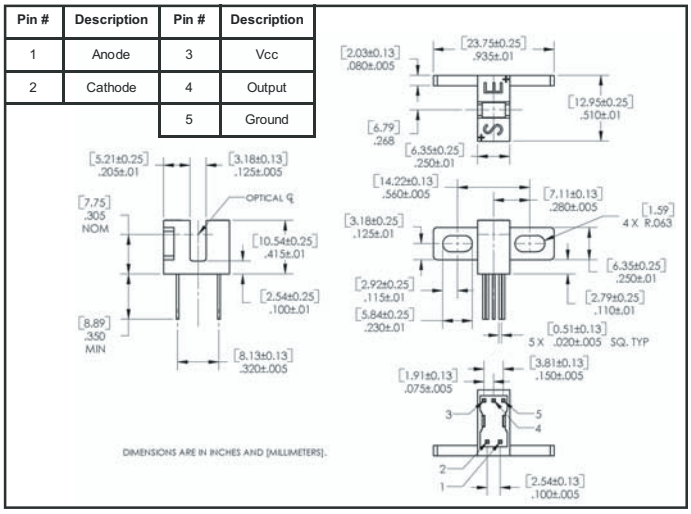

Package # 122

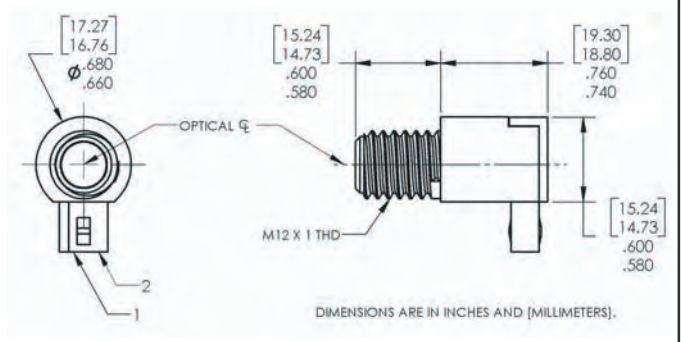

			White Housing		Black Housing	
Housing	LED- White	Sensor—Black	Pin #	Description	Pin #	Description
Connector	MOLEX 02-06-6122	MOLEX 02-06-7104	1	Anode	1	Emitter
Plug	MOLEX 03-06-2023	MOLEX 03-06-2023	2	Cathode	2	Collector

Package # 123

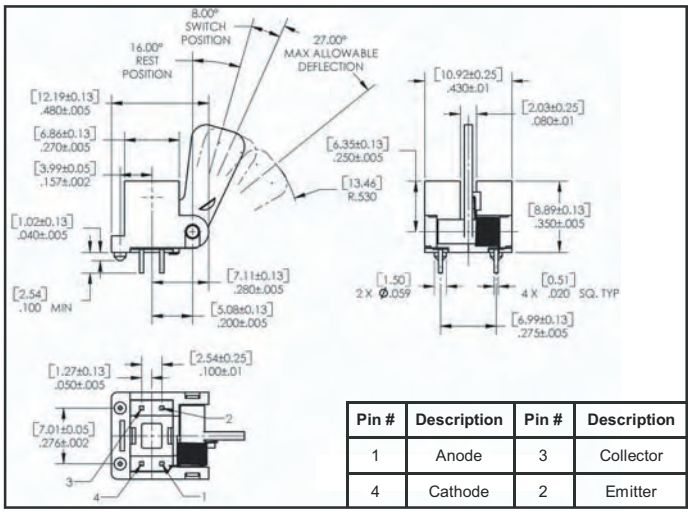

Pin #	Description	Pin #	Description
1	Anode	3	Collector
4	Cathode	2	Emitter

Package # 124

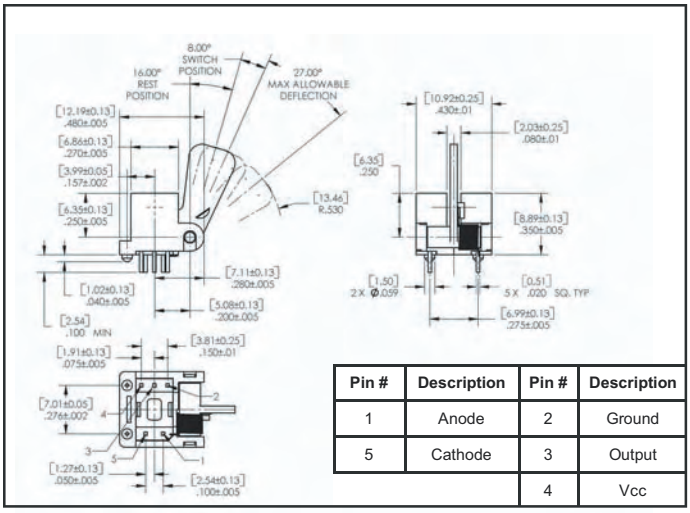

Pin #	Description	Pin #	Description
1	Anode	2	Ground
5	Cathode	3	Output
		4	Vcc

Package # 125

Pin #	OPB690	OPB695
1	Anode	Vcc
2	Collector	Output
3	Ground	Ground

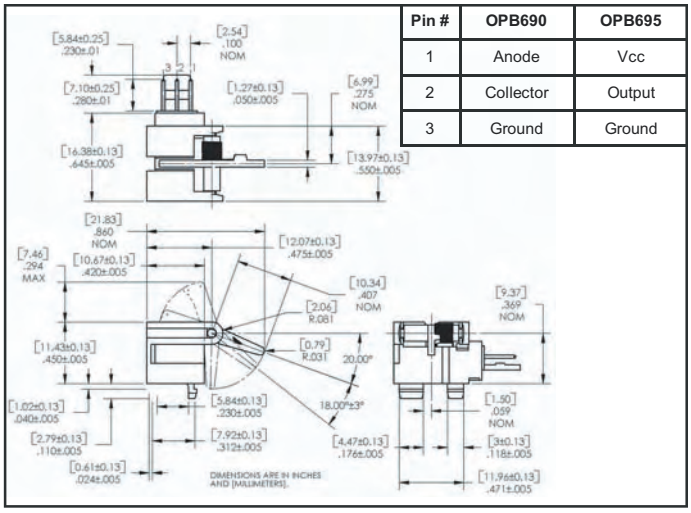

Package # 126

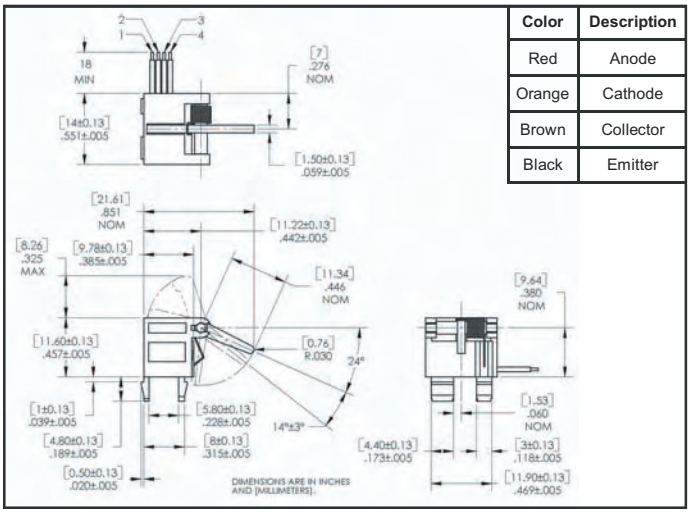

Color	Description
Red	Anode
Orange	Cathode
Brown	Collector
Black	Emitter

Package # 127

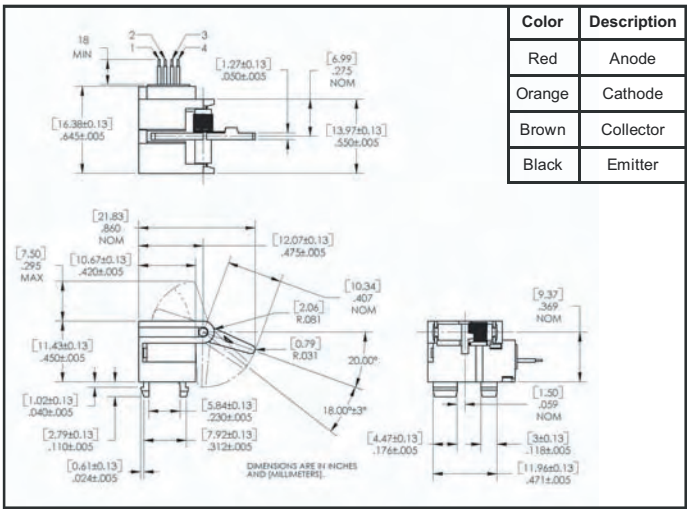

Color	Description
Red	Anode
Orange	Cathode
Brown	Collector
Black	Emitter

Package # 128

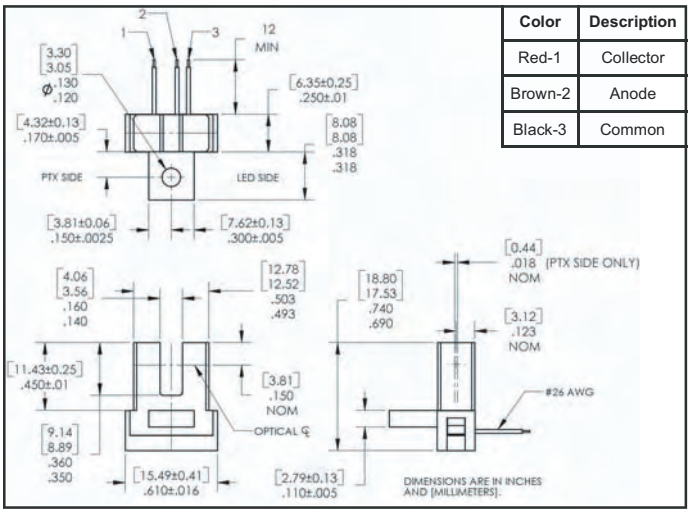

Color	Description
Red-1	Collector
Brown-2	Anode
Black-3	Common

Package # 129

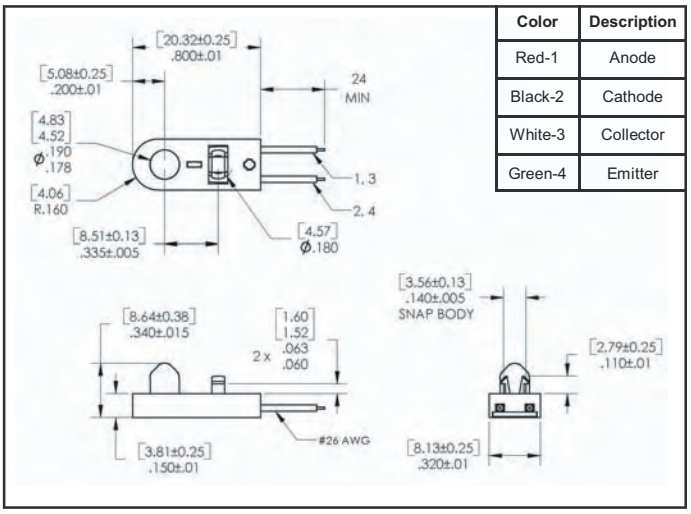

Color	Description
Red-1	Anode
Black-2	Cathode
White-3	Collector
Green-4	Emitter

Package # 130

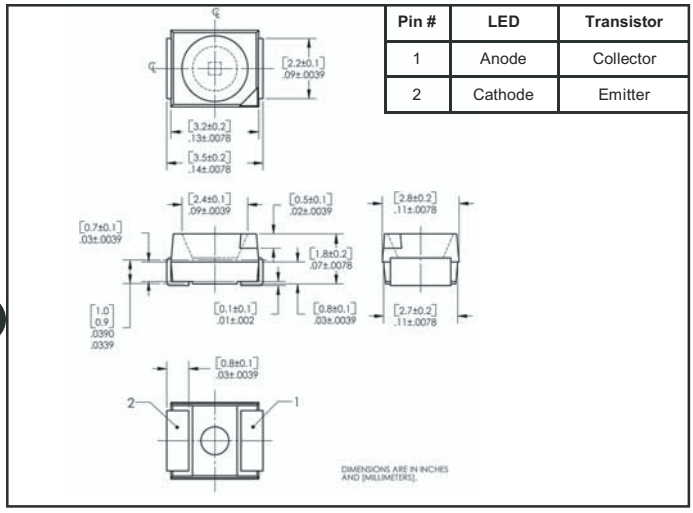

Pin #	LED	Transistor
1	Anode	Collector
2	Cathode	Emitter

Package # 131

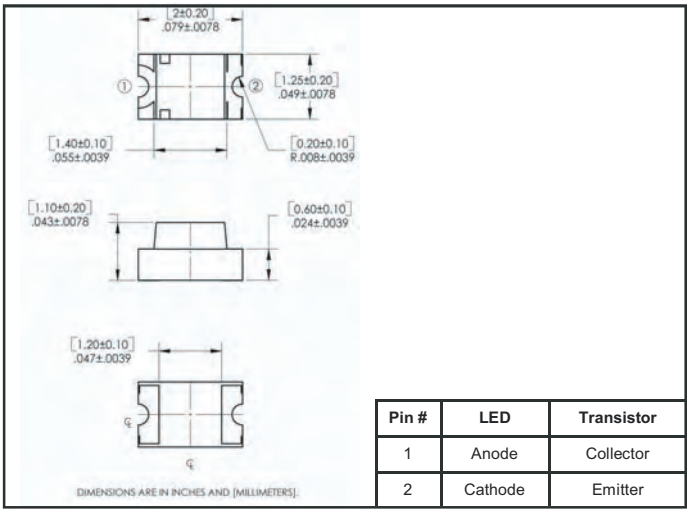

Pin #	LED	Transistor
1	Anode	Collector
2	Cathode	Emitter

Package # 132

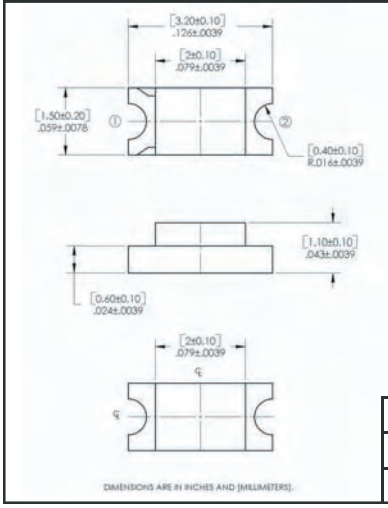

Pin #	LED	Transistor
1	Anode	Collector
2	Cathode	Emitter

Package # 133

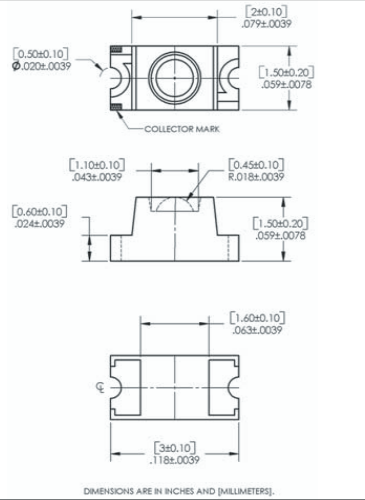

Pin #	LED	Transistor
1	Anode	Collector
2	Cathode	Emitter

Package # 134

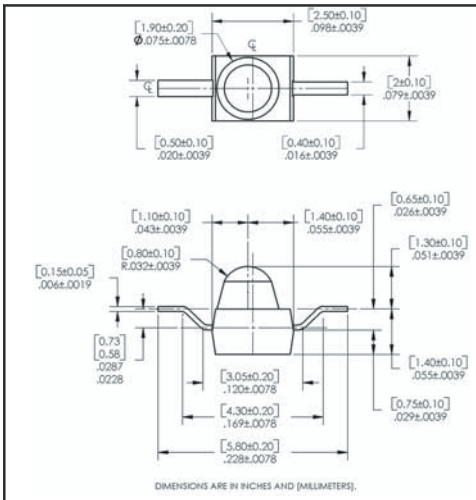

Pin #	LED
1	Anode
2	Cathode

Pin #	Transistor
1	Collector
2	Emitter

Package # 135

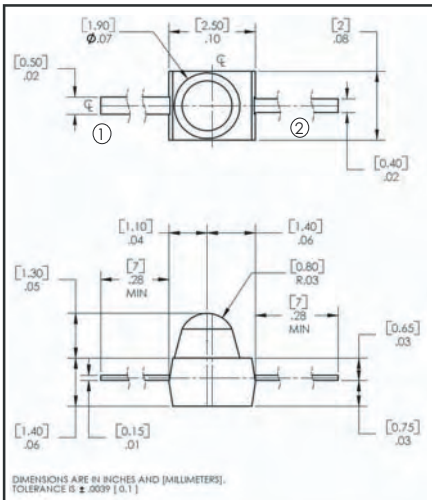

Pin #	LED
1	Anode
2	Cathode

Pin #	Transistor
1	Collector
2	Emitter

Package # 136

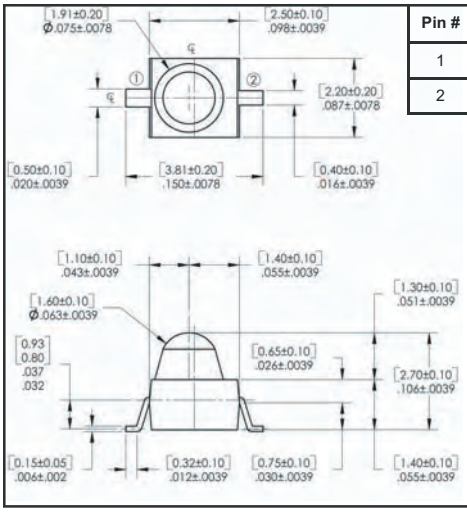

Pin #	LED	Transistor
1	Anode	Collector
2	Cathode	Emitter

Package # 137

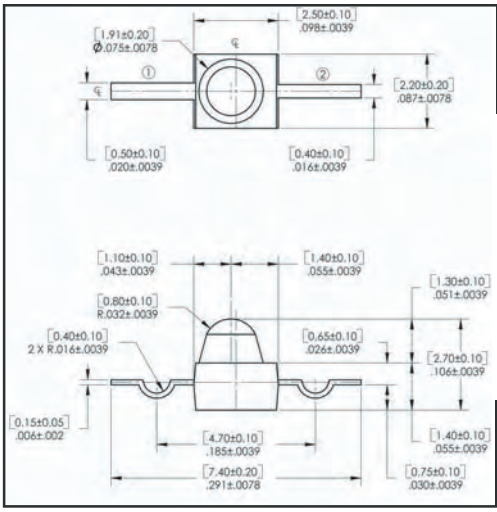

Pin #	LED
1	Anode
2	Cathode

Pin #	Transistor
1	Collector
2	Emitter

Package # 138

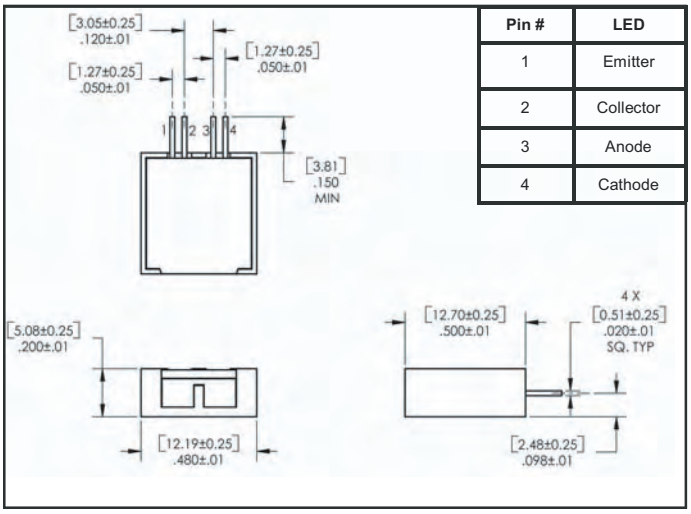

Pin #	LED
1	Emitter
2	Collector
3	Anode
4	Cathode

Package # 139

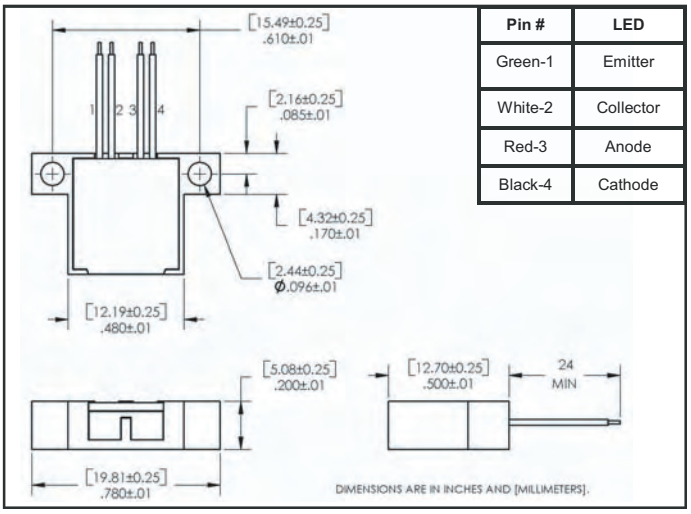

Pin #	LED
Green-1	Emitter
White-2	Collector
Red-3	Anode
Black-4	Cathode

Package # 140

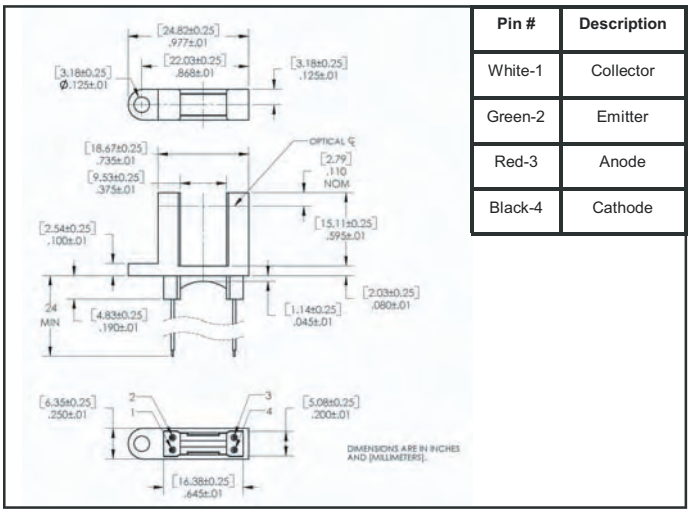

Pin #	Description
White-1	Collector
Green-2	Emitter
Red-3	Anode
Black-4	Cathode

Package # 141

Notes:

Pin #	Description
1	Anode
2	Cathode

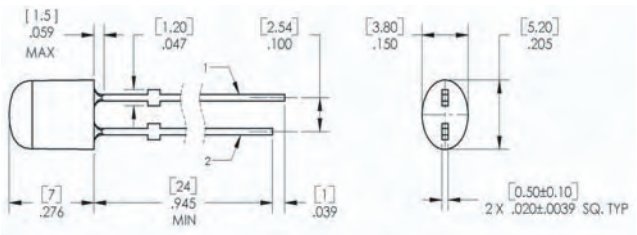

Package # 200

Pin #	Description
1	Anode
2	Cathode

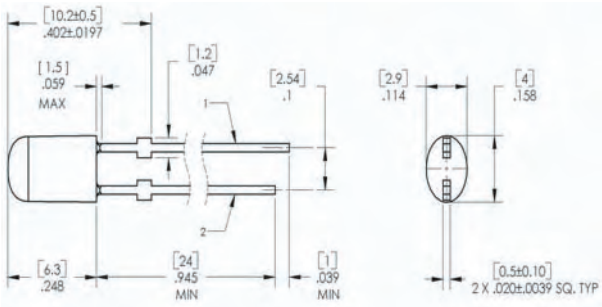

Package # 201

Pin #	Description
1	Anode
2	Cathode

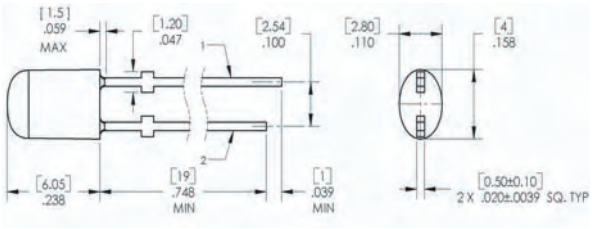

Package # 202

Pin #	Description
1	Anode
2	Cathode

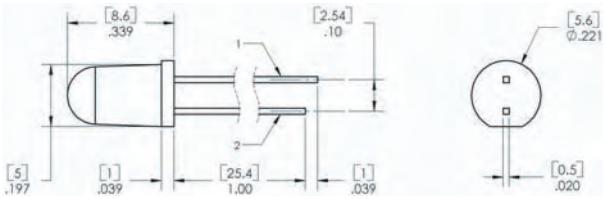

Package # 203

Pin #	Description
1	Anode
2	Cathode

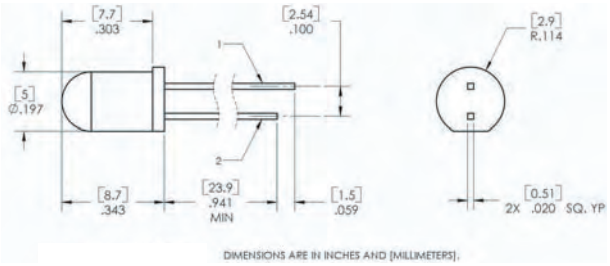

Package # 204

Pin #	Description
1	Anode
2	Cathode

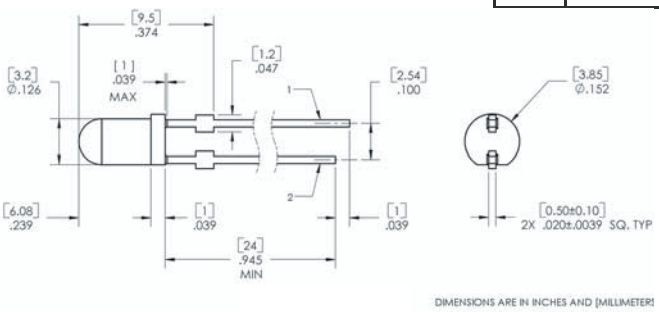

Package # 205

Pin #	Description
1	Anode
2	Cathode

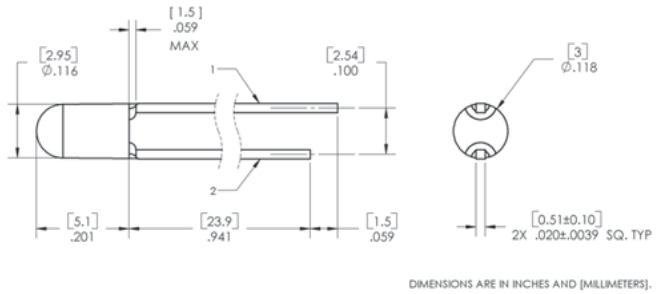

Package # 206

Pin #	Description
1	Anode
2	Cathode

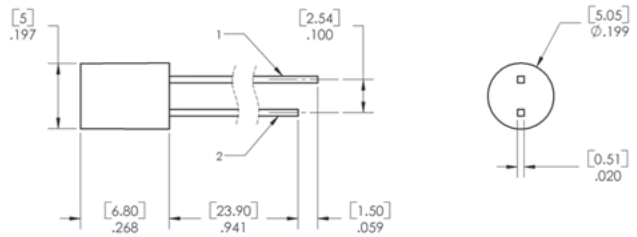

Package # 207

Pin #	Description
1	Anode
2	Heat Sink
3	Cathode

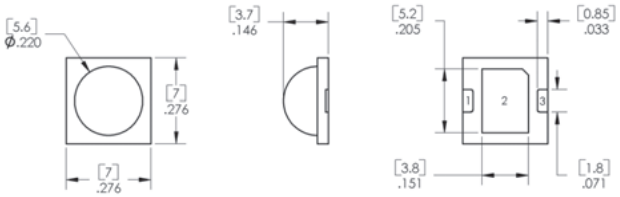

Package # 208

Pin #	Description
2, 3	Anode
1, 4	Cathode

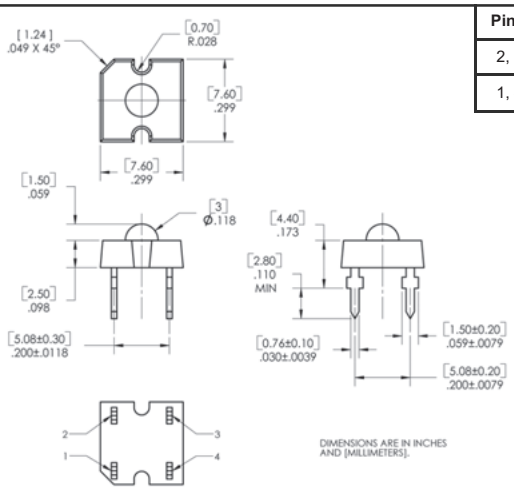

Package # 209

Pin #	Description
4	Anode
1, 2, 3	Cathode

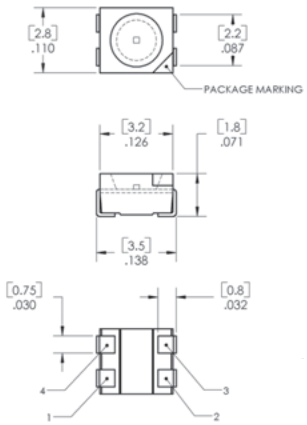

Package # 210

Pin #	Description
1	Anode
1, 2, 3	Cathode

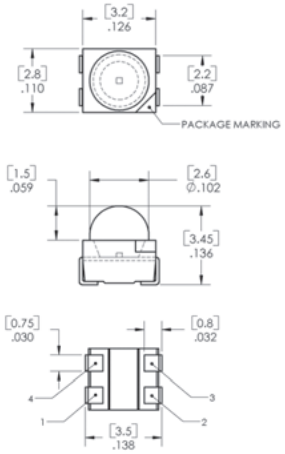

Package # 211

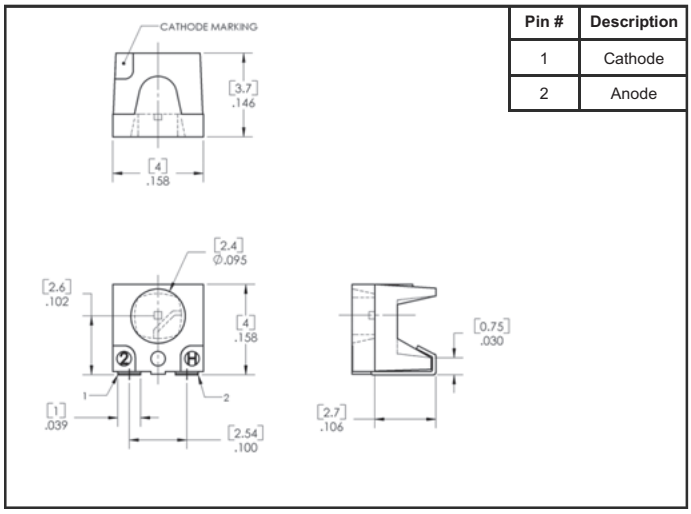

Pin #	Description
1	Cathode
2	Anode

Package # 212

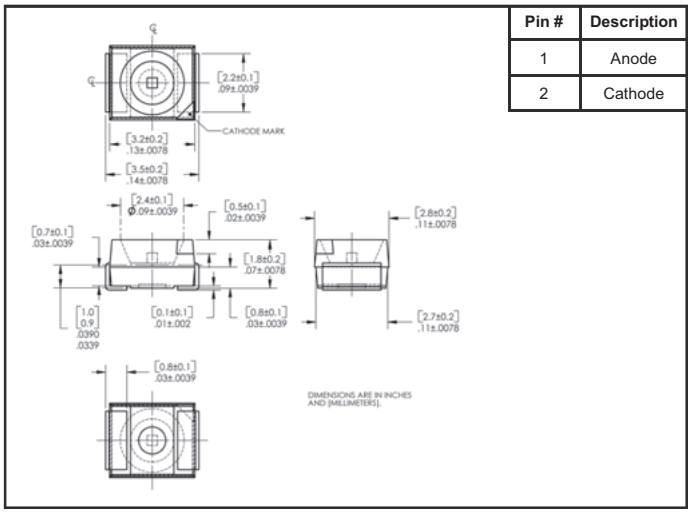

Pin #	Description
1	Anode
2	Cathode

Package # 213

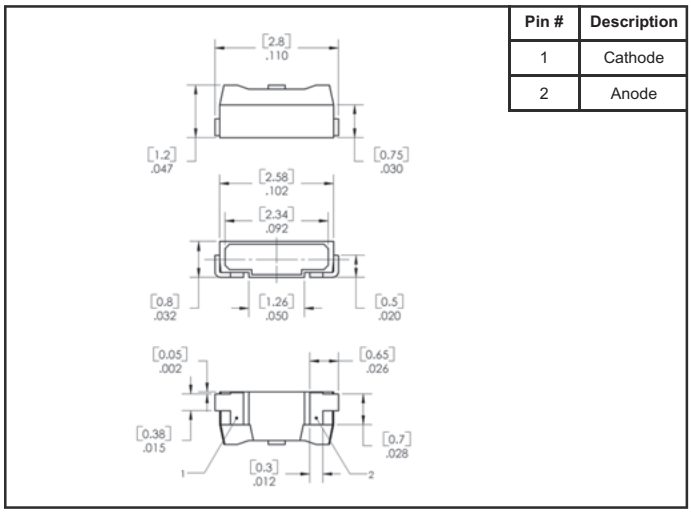

Pin #	Description
1	Cathode
2	Anode

Package # 214

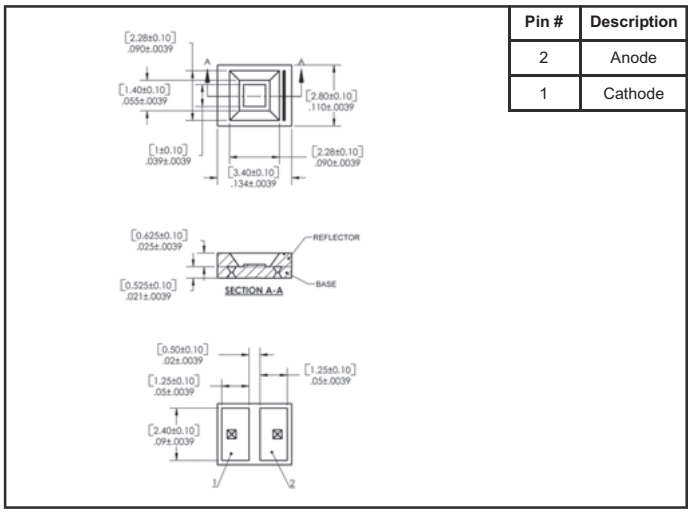

Pin #	Description
2	Anode
1	Cathode

Package # 215

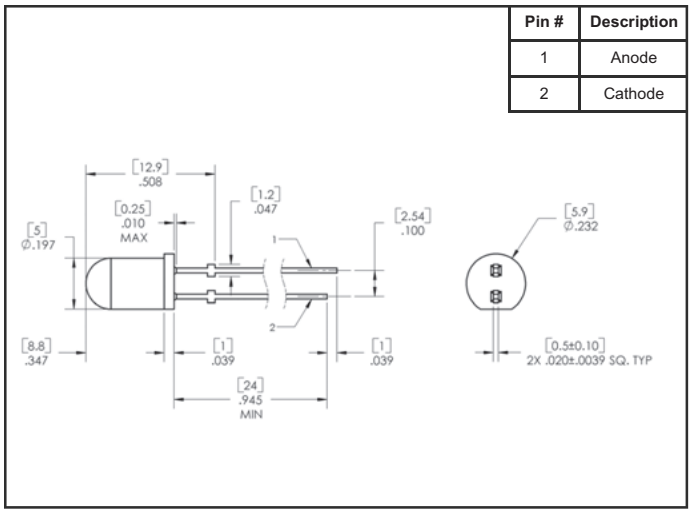

Pin #	Description
1	Anode
2	Cathode

Package # 216

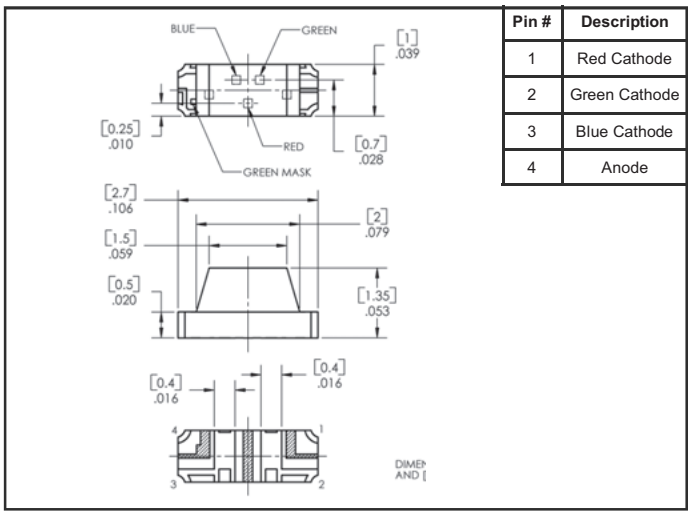

Pin #	Description
1	Red Cathode
2	Green Cathode
3	Blue Cathode
4	Anode

Package # 217

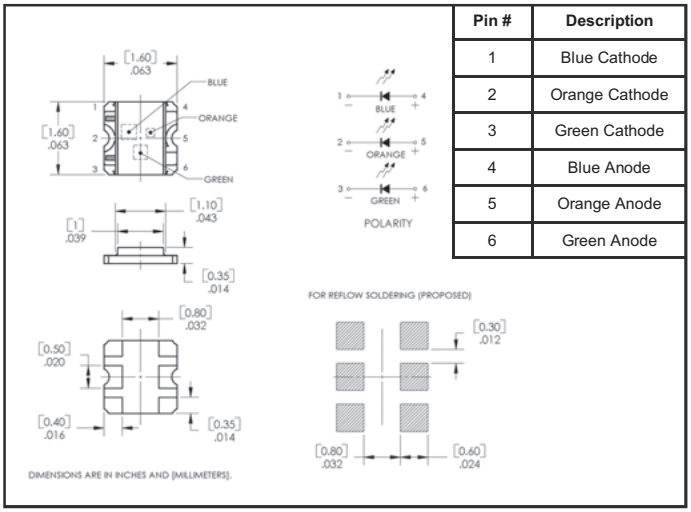

Pin #	Description
1	Blue Cathode
2	Orange Cathode
3	Green Cathode
4	Blue Anode
5	Orange Anode
6	Green Anode

Package # 218

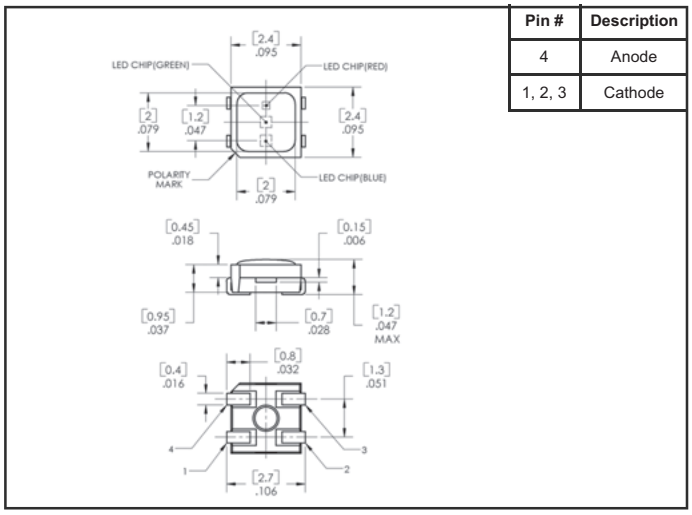

Pin #	Description
4	Anode
1, 2, 3	Cathode

Package # 219

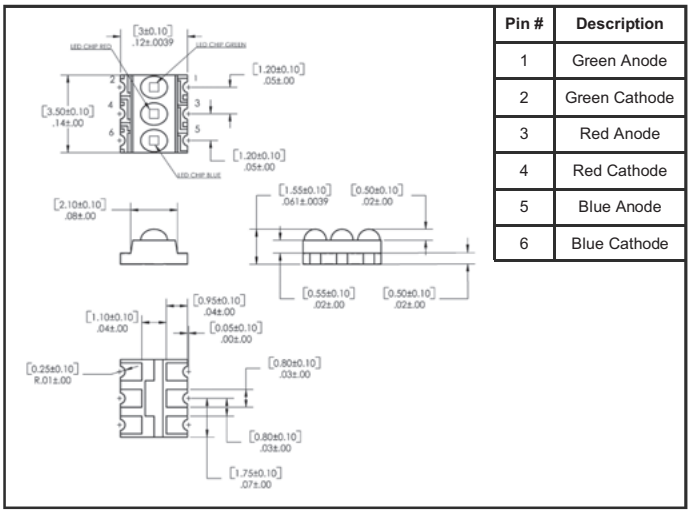

Pin #	Description
1	Green Anode
2	Green Cathode
3	Red Anode
4	Red Cathode
5	Blue Anode
6	Blue Cathode

Package # 220

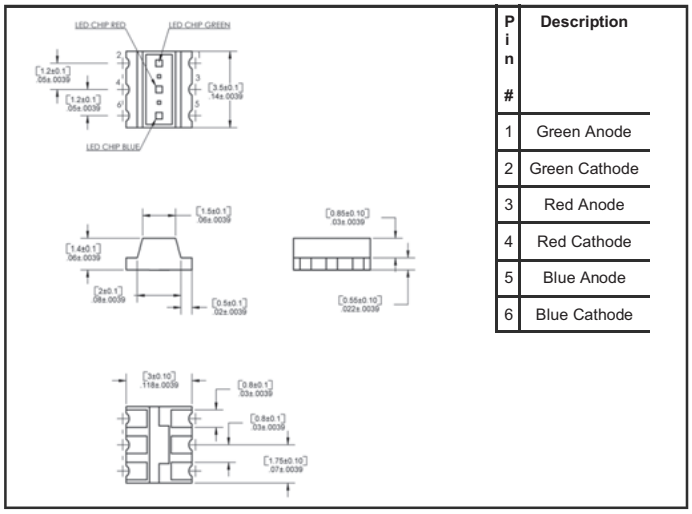

Pin #	Description
1	Green Anode
2	Green Cathode
3	Red Anode
4	Red Cathode
5	Blue Anode
6	Blue Cathode

Package # 221

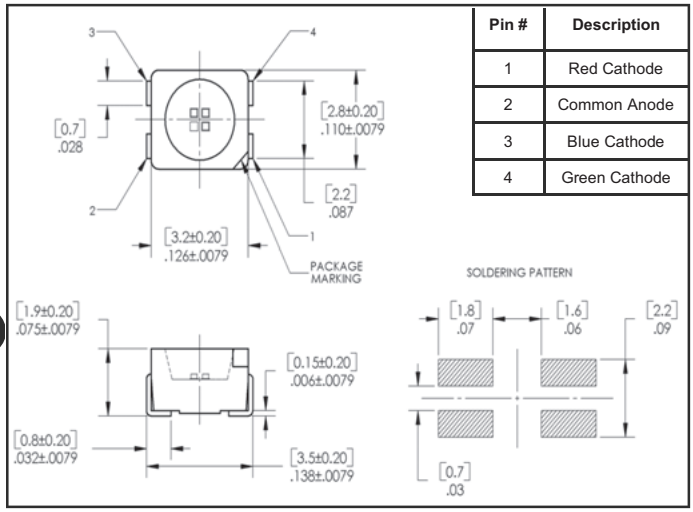

Pin #	Description
1	Red Cathode
2	Common Anode
3	Blue Cathode
4	Green Cathode

Package # 222

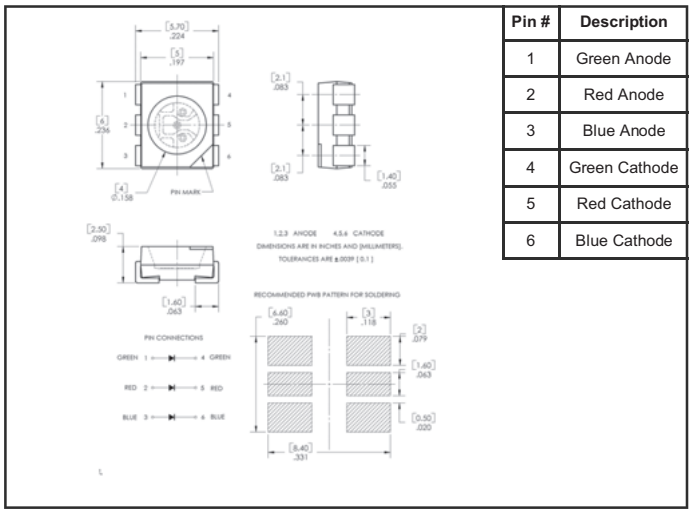

Pin #	Description
1	Green Anode
2	Red Anode
3	Blue Anode
4	Green Cathode
5	Red Cathode
6	Blue Cathode

Package # 223

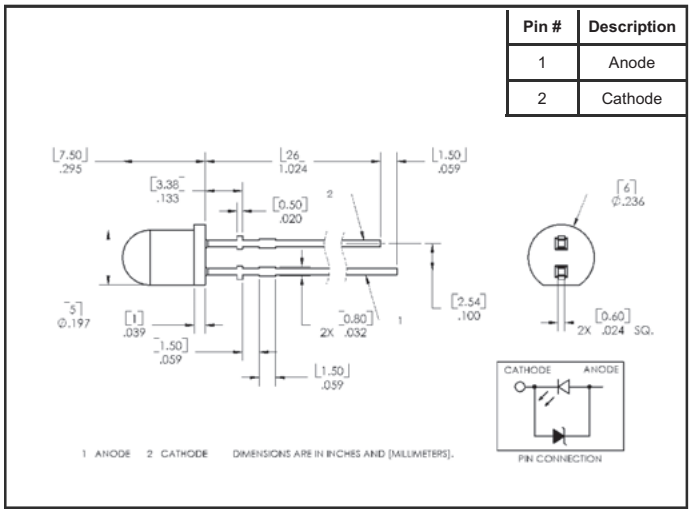

Package # 224

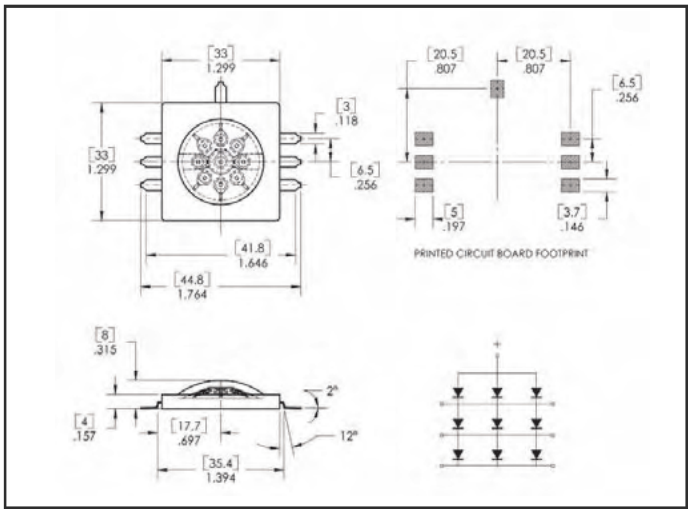

Package # 225

Notes:

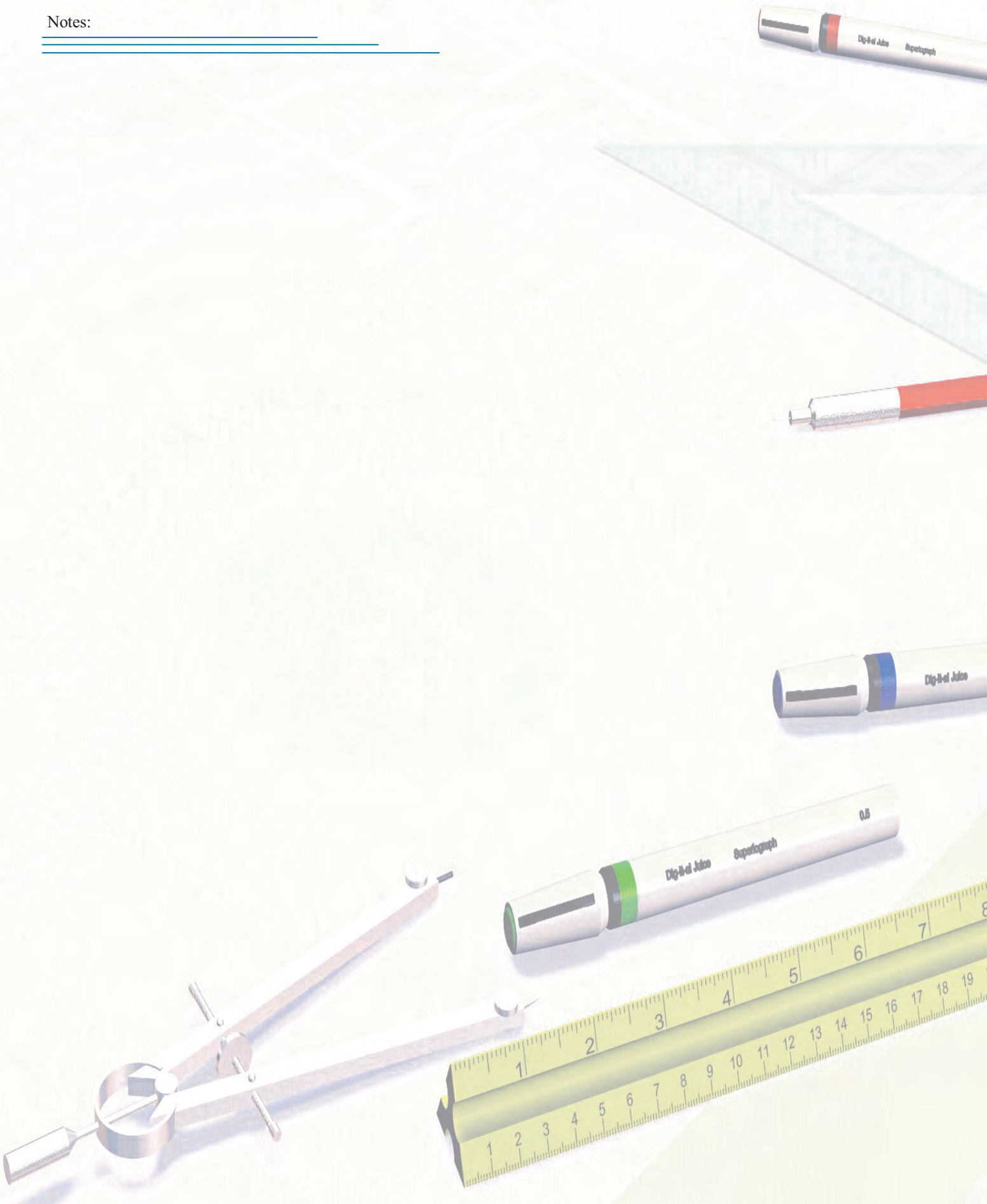
Dig-It-el Juice
Superlograph
Dig-It-el Juice
Dig-It-el Juice
Superlograph
0.5

North American Distributors

Distributor	Address	Phone
	Arrow 50 Marcus Drive Melville, NY 11747 www.arrow.com	877-237-8621
	Digi-Key Corporation 701 Brooks Avenue South Thief River Falls, MN 56701 www.digi-key.com	800-338-4105
	Falcon Electronics 47 Mall Drive Suite #5 Commack, NY 11725 www.falconelec.com	800-444-4744
	Future Electronics 237 Hymus Boulevard Point-Claire, PQ, Canada www.futureelectronics.com	800-655-0006
	Mouser Electronics 1000 North Main Street Mansfield, TX 76063-1514 www.mouser.com/optek	800-346-6873
	Newark In One 4801 N. Ravenswood Chicago, IL 60640 www.newark.com	800-4NEWARK 800-463-9275
	Prime Electro Products 811 Manhatten Beach Blvd. Manhattan Beach, CA 90266 www.primeelectro.com	800-347-1001
	Tresco 736 Greenway Road P.O. Box 1860 Boone, NC, 28607 www.tresco.com	828-263-5119

International Distribution Locations

AMERICAS:

FUTURE ELECTRONICS
237 Hymus Boulevard
Point-Claire, PQ, Canada
Telephone: 800 655 0006
www.futureelectronics.com

ARROW
50 Marcus Drve
Melville, New York USA 11747
Telephone: 877 237 8621
www.arrow.com

AUSTRIA:

NEUMUELLER-FENNER ELEKTRONIK GmbH
Henleinstrasse 1
85570 Markt Schwaben
Germany
Tel: +49 (0) 8121/258331
Fax: +49 (0) 8121258382
Email: optek@neumueller.com
Web: www.neumueller.com

AUSTRALIA:

LOGIC 4 AUSTRALASIA PTY LTD.
35 Finniss St.
Gawler SA 5118
Australia
Tel: +61 8 8522 7047
Fax: + 61 8 8522 7048
Email: slhaaren@ozemail.com.au

BELGIUM:

Koning & Hartman
Pontebeeklaan 43
1731 Zellik
Belgium
Tel: + 32 2 467 17 44
Fax: + 32 2 467 17 48
Email:
Gerjon.Gabry@KoningenHartman.com
Web: www.embeddit.nl

CHINA:

B.B.S. ELECTRONICS PTE LTD
12 Genting Road
349474 Singapore
Tel: (656) 559-8400
Fax: (656) 559-8568
Email: info@bbsgroup.com.sq

BEIJING NORTHKING ELECTRONIC TECHNOLOGY
DEVELOPMENT CO. LTD.
No.6 Jia, Kang Ding Street
Beijing Economic-technological
Development Area
Beijing
China 100176
Tel: +86 10 6785 6600 ext. 121
Fax: +86 10 6785 6123
Email: Norking@public.gb.com.cn

CHINAMAX TECHNOLOGIES LIMITED
Unit 2702, Modern Warehouse
6 Shig Yip Street
Kwun Tong, Kowloon
Hong Kong
Tel: +852 2344 7899
Fax: +852 2344 0290
Email: cslau@chinamax.com.hk

MAXMEGA ELECTRONICS CO. LTD
Hong Kong Sales Office
Unit 8 on 16/F
Fortune Commercial Building
No. 358-362 Sha Tsui Road
Tsuen Wan, N.T. Hong Kong
HK Tel: +852 2612 4366 / 4367
CHINA Tel: +86 755 83558770 / 71
Fax: +852 2612 4369
Email: maxsales@maxmega.com

SEAMAX ENGINEERING (SIP) PTE LTD
No. 128 Donghuan Road, 3F Zhongxin City
Suzhou, Jiangsu Province, P.R. China
Postal Code 215021
Tel: +86 0512 6750 1076 ext. 628
Fax: +86 0512 6725 8318
Mobile Number: 86 1301 377 8488
Email: xuqian@seamax.com.sg

TEKTRON ELECTRONICS (HK) L.T.D.
1702 Bank Centre
636 Nathan Road
Kowloon
Hong Kong
Tel: +852 2388 0629
Fax: +852 2780 5871
Email: tektron@tek.com.hk

DENMARK:

DKI DANSK KOMPONENT IMPORT A/S
Kongevejen 83
2840 Holte
Denmark
Tel: +45 45 41 0500
Fax: +45 45 41 0512
Email: info@dki..dk
Web: www.dki.dk

FINLAND:

ACTE NC FINLAND OY
Larin Kyostin Tie 4
00650 Helsinki
Finland
Tel: +35 89 752 766 90
Fax: +35 89 752 766 55
Email: arimo.leino@acte.fi
Web: www.acte.fi

FRANCE:

EUROCOMPOSANT
144 Avenue Joseph Kessel
78960 Voisins-le-Bretonneux
France
Tel: +33130649515
Fax: +33130436827
Email: contact@eurocomposant.fr
Web: www.eurocomposant.fr

GERMANY:

NEUMUELLER-FENNER ELEKTRONIK GmbH
Henleinstrasse 1
85570 Markt Schwaben
Germany
Tel: +49 (0) 8121/258331
Fax: +49 (0) 8121258382
Email: Optek@Neumueller.com
Web: www.neumueller.com

INDIA:

B.B.S. ELECTRONICS PTE LTD
12 Genting Road
349474 Singapore
Tel: (656) 559-8400
Fax: (656) 559-8568
Email: info@bbsgroup.com.sq

SEAMAX ENGINEERING PTE. LTD.
61, Kaki Bukit Avenue 1
Shun Li Industrial Park
#04-38 Singapore 417943
Tel: +65 547 1828
Fax: +65 547 6388
Fax: +65 241 9422
Email: sales@seamax.com.sg

IRELAND:

AMTECH INDUSTRIES LTD
Unit 19C
Rosemount Park Drive
Rosemount Business Park
Ballycoolin Road
Blanchardstown, Dublin 15
Ireland
Tel: +353 1 821 6444
Fax: +353 1 821 6355
Email: amtech@iol.ie

ISRAEL:

EL-GEV ELECTRONICS LTD
BAREKET Building, P.O. Box 162
AIR-PORT City 70100
Israel
Tel: +972-3-972 0666
Fax: +972-3-972 0667
Email: yoely@elgev.co.il
Web: www.elgev.co.il

ITALY:
KEVIN SCHURTER
Via Venezia Giulia, 10
20157 Milano
Italy
Tel: +390233200914
Fax: +390233200917
Email: info@kevin.it
Web: www.kevin.it

KOREA:
MS INTERNATIONAL CORP.
C.P.O. Box 6780
Rm. No. 1205 Haechun Bldg.
#831, Yucksam-Dong
Kangnam-Ku, Seoul,
Korea
Tel: +82 2 553 0901
Tel: +82 2 555 5584
Fax: +82 2 553 0046
Email: msinter0@elim.net

LATIN AMERICA:
GRAFTEC ELECTRONIC SALES, INC.
Corporate Headquarters
1 Boca Place
2255 Glades Road
Boca Raton, FL 33431
United States
Tel: +561 994 0933
Fax: +561 994 5518
Fax: +561 994 6698

MALAYSIA:
SEAMAX
No. 1, Jalan Batu Uban
#1C-18-01
11700 Penang
Malaysia
Tel: +604 659 1828
Fax: +604 659 6388
Email: sales@seamax.com.sg

THE NETHERLANDS:
KONING & HARTMAN
Energieweg 1,
Postbus 5080
2600 GB Delft
The Netherlands
Tel: + 31 15 260 9576
Fax: + 31 15 261 9194
Email:
gerjon.gabry@KoningenHartman.com
Web: www.embeddit.nl

NEW ZEALAND:
PROFESSIONAL ELECTRONICS (1993) LTP
P.O. Box 75
Silverdale, HBC
Auckland, New Zealand
Tel: +64 7 543 3916
Fax: +64 7 543 3917
Email: dorahamr.@xtra.co.nz

PORTUGAL:
MATRIX LISBOA
LusoMatrix, Lda
Av. Coronel Eduardo Galhardo
N°7, Piso -1C
1170-105 Lisboa/Portugal
Tel: +351 21 816 2625
Fax: +351.21 814 9482
Web: www.matrix.es

SINGAPORE:
SEAMAX ENGINEERING PTE. LTD.
61, Kaki Bukit Avenue 1
Shun Li Industrial Park
#04-38 Singapore 417943
Tel: +65 547 1828
Fax: +65 547 6388
Fax: +65 241 9422
Email: sales@seamax.com.sg

SOUTH AFRICA:
COMMUNICA (PTY) LTD.
P. O. Box 29011 Sunnyside
0132 Pretoria SA
South Africa
Tel: +27 12 322 7613
Fax: +27 12 322 3721
Email: Imraanj@communica.co.za
Web: www.salespt@communica.co.za

SPAIN:
MATRIX ELECTRONICS
C/ Belmonte de Tajo 76 3°
28019 Madrid
Spain
Tel: +34 91 5602737
Fax: +34 91 5652865
Mr. Joseph Maria Vilallonga
MATRIX ELECTRONICA, S.L.
Web: www.matrix.es

SWEDEN:
MARTINSSON ELEKTRONIK AB
Instrumentvaegen 16
Box 9060
12609 Haegersten
Stockholm
Sweden
Tel: +46 8 744 0300
Fax: +46 8 744 7922
Email:
Per.Ekelund@Martinssonelektronik.se
Web: www.martinssonelektronik.se

SWITZERLAND:
SWISSDIS AG
Grasweg 7
CH-4911 Schwarzhaeusern
Switzerland
Tel: +41 0 62 923 6706
Fax: +41 0 62 923 6707
Email: swissdis@bluewin.ch

TAIWAN:
SEA UNION ENGINEERING ENT. LTD.
9F-1, No. 19-3, San-Chung Road
Nan-Kang (Nan Kang Software Park)
Taipei 115
Taiwan
Tel: +886 2 2655 3989
Fax: +886 2 2655 3918
Fax: +886 2 2655 3919
Email: seaunion@ms2.hinet.net

TAIWAN:
MAXMEGA ELECTRONICS CO. LTD
12F-3, No. 81 Sec. 1
Hsin Tai 5th Road
Hsichi City, Taipei County
Taiwan
Tel: +886-2-2698-0809
Fax: +886-2-2698-0810
E-mail: murphy@maxmega.com
Email: anita@maxmega.com
Web: www.maxmega.com

TURKEY:
EMPA ELECTRONIK SANAYI VE TICARET A.S.
Organize Sanayi Bolgesi
Turgut Ozal Caddesi No. 135
34670, Ikitelli, Istanbul Turkey
Tel: +902126711080 ext. 120
Fax: +902126711088
Email: voklan@empa.com
Web: www.empa.com

UNITED KINGDOM:
PACER COMPONENTS PLC
Unit 4, Horseshoe Park
Pangbourne, Reading
Berkshire RG8 7JW
Tel: +44 118 984 5280
Fax: +44 118 984 5425
Email: pacer@pacer.co.uk

Notes:

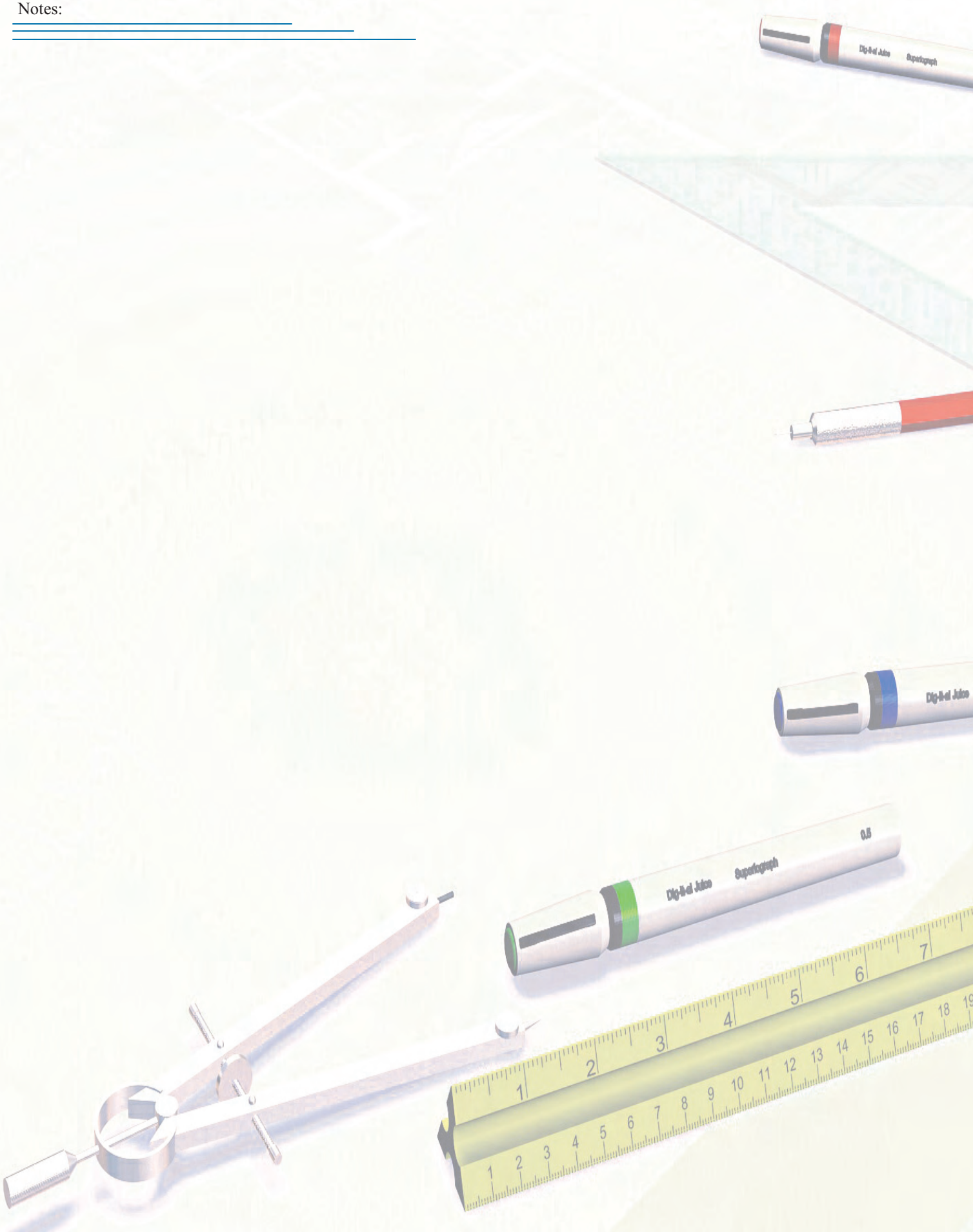
Dig-it-al Juice
Superlograph
Dig-it-al Juice
Dig-it-al Juice
Superlograph
0.5

CORPORATE OFFICE:

OPTEK Technology
1645 Wallace Drive
Carrollton, Texas 75006 USA

Telephone: 972-323-2200
Toll Free: 800-341-4747
Facsimile: 972-323-2396
Email: sensors@optekinc.com
Email: visibleLED@optekinc.com

Website: www.optekinc.com

OPTEK Technology is a subsidiary of:
TT electronics
Clive House, 12-18 Queens Road
Weybridge, Surrey, KT13 9XB, England

Telephone: +44 (0) 1932 841310
Facsimile: +44 (0) 1932 846450
Email: info@ttelectronics.com

Website: www.ttelectronics.com

Issue CC-0605-11

AMEYA360
Components Supply Platform

Authorized Distribution Brand :

Website :

Welcome to visit www.ameya360.com

Contact Us :

- ## Address :

401 Building No.5, JiuGe Business Center, Lane 2301, Yishan Rd
Minhang District, Shanghai , China

- ## Sales :

Direct +86 (21) 6401-6692

Email amall@ameya360.com

QQ 800077892

Skype ameyasales1 ameyasales2

- ## Customer Service :

Email service@ameya360.com

- ## Partnership :

Tel +86 (21) 64016692-8333

Email mkt@ameya360.com