PART NAME	NEMA SHEET METAL BOX- STYLE B	PART No.	SNB-3743	REVISION DATE	9-07-10

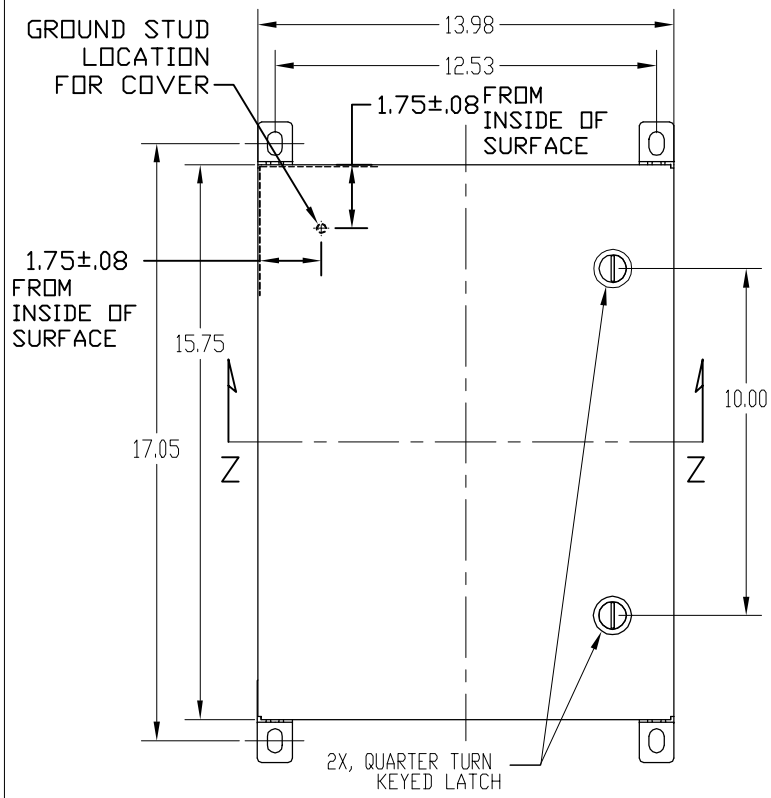

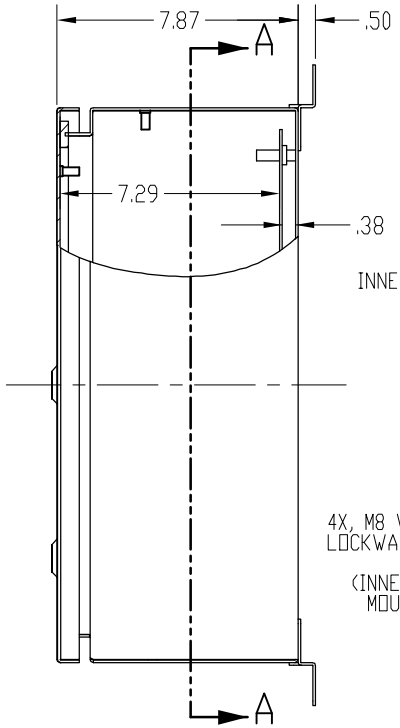

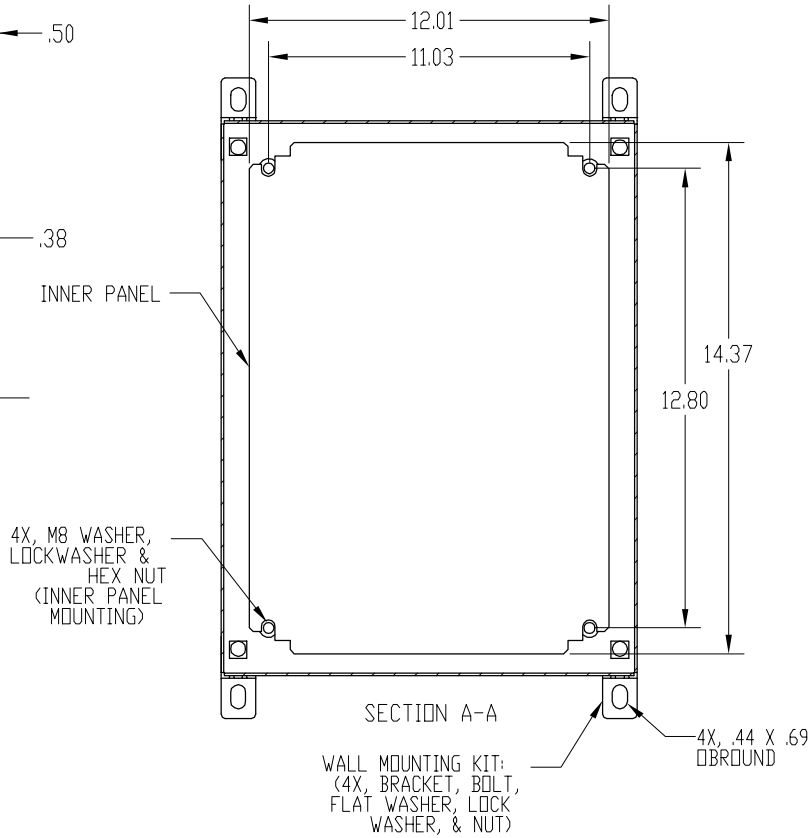

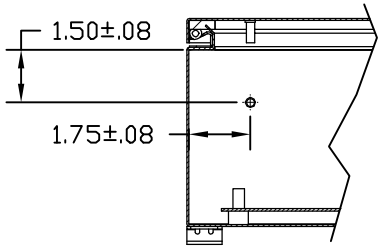

SECTION Z-Z SHOWING BOX GROUND STUD LOCATION

MATERIAL:

BODY & COVER - 16 GA. [.062" (1.5mm)] COLD ROLLED STEEL
PANEL - 14 GA. [.078" (2mm) THK.] COLD ROLLED STEEL
MOUNTING BRACKETS AND HARDWARE - 14 GA. [.078" (2mm)] STAINLESS STEEL
GASKET - NEOPRENE

FINISH:

BODY & COVER - LIGHT GRAY POWDER COAT PAINT
PANEL - ZINC CHROMATE
MOUNTING BRACKETS - NATURAL

DIMENSIONS ARE IN INCHES

AMEYA360
Components Supply Platform

Authorized Distribution Brand :

Website :

Welcome to visit www.ameya360.com

Contact Us :

- **Address :**

  401 Building No.5, JiuGe Business Center, Lane 2301, Yishan Rd
  Minhang District, Shanghai , China

- **Sales :**

  Direct +86 (21) 6401-6692

  Email amall@ameya360.com

  QQ 800077892

  Skype ameyasales1 ameyasales2

- **Customer Service :**

  Email service@ameya360.com

- **Partnership :**

  Tel +86 (21) 64016692-8333

  Email mkt@ameya360.com