PART NAME	UTILIBOX (STYLE F)	PART No.	CU-1874-B & CU-1874-G

MATERIAL:
COVER AND BODY____MOLDED IMPACT RESISTANT ABS

FINISH:
(SUFFIX -B) COVER AND BODY_____BLACK
(SUFFIX -G) COVER AND BODY_____GRAY

FOUR (4) M2.5 x 17.5mm LG. SCREWS ARE SUPPLIED FOR ASSEMBLY.

NOTE: ALL DIMENSIONS HAVE ±0.015 TOLERANCE UNLESS OTHERWISE SPECIFIED.

MOUNTING BOSSES USE EITHER M2.5 METRIC OR #4 STD. SHEET METAL SCREWS x 0.187" LG. (NOT SUPPLIED)

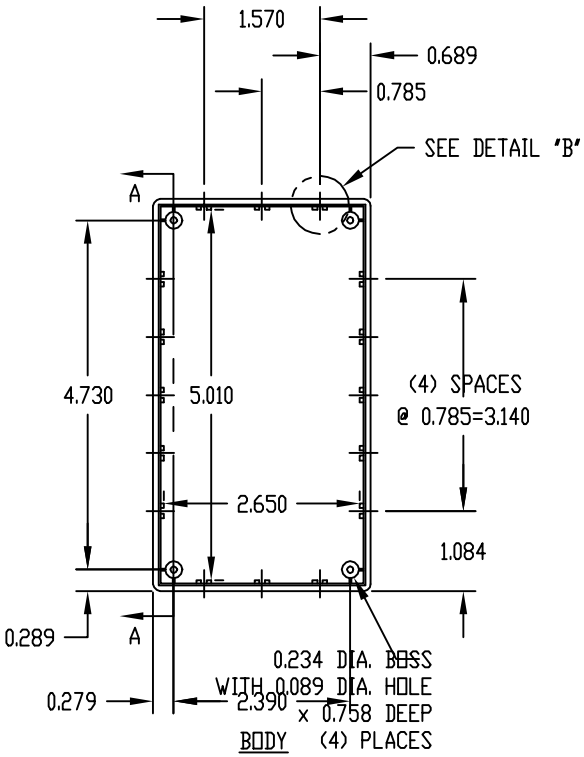

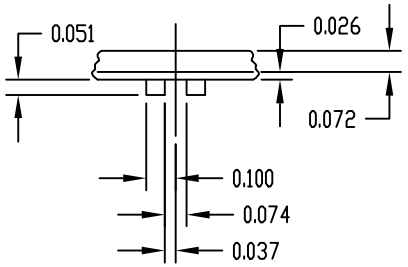

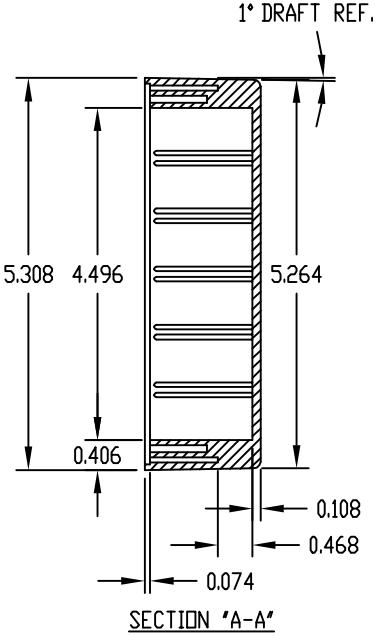

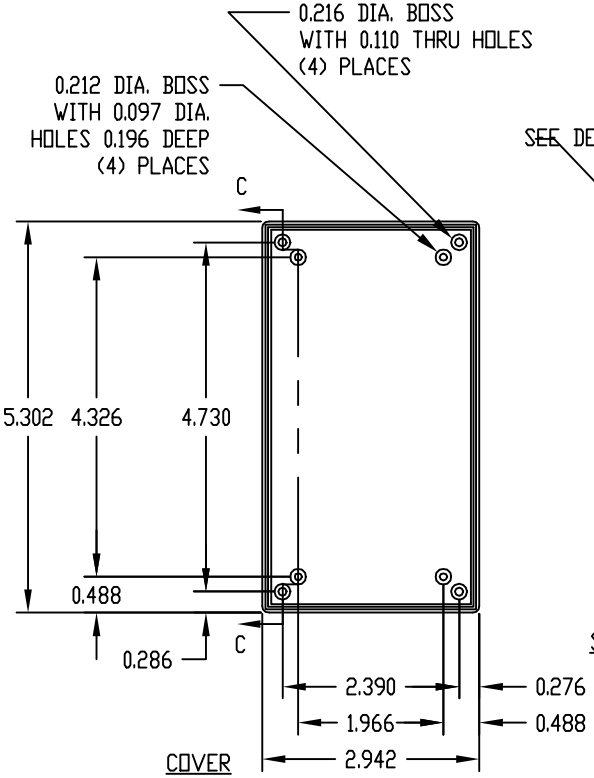

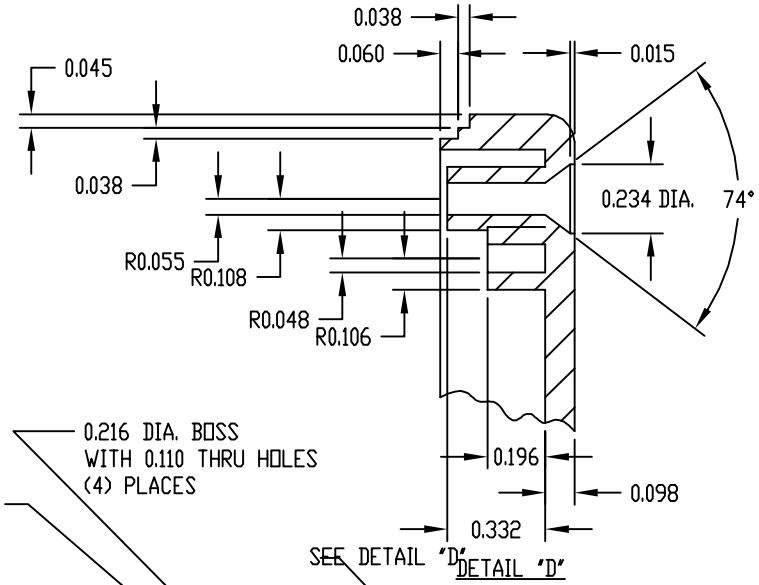

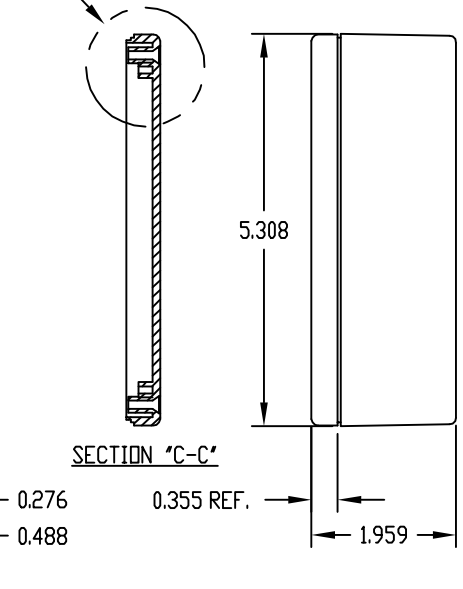

AMEYA360
Components Supply Platform

Authorized Distribution Brand :

Website :

Welcome to visit www.ameya360.com

Contact Us :

- ### Address :

  401 Building No.5, JiuGe Business Center, Lane 2301, Yishan Rd
  Minhang District, Shanghai , China

- ### Sales :

  Direct +86 (21) 6401-6692

  Email amall@ameya360.com

  QQ 800077892

  Skype ameyasales1 ameyasales2

- ### Customer Service :

  Email service@ameya360.com

- ### Partnership :

  Tel +86 (21) 64016692-8333

  Email mkt@ameya360.com