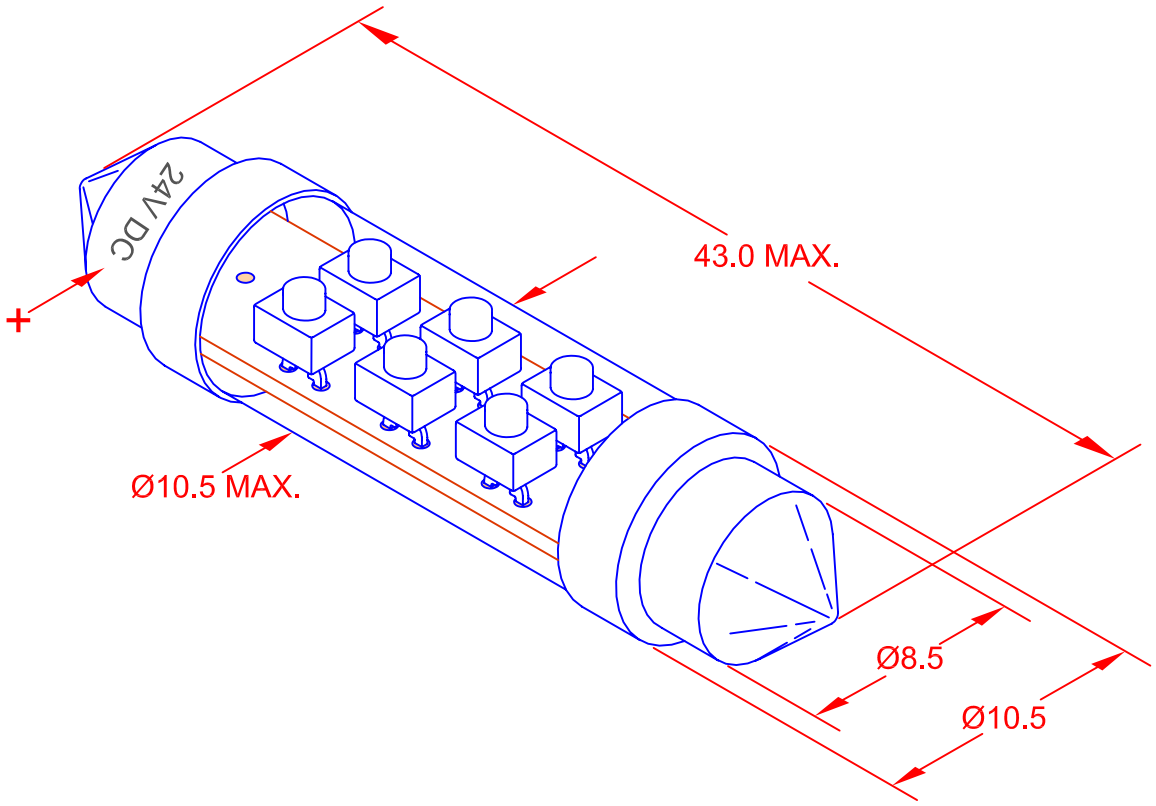

NOTES:
1. LED includes integrated diode for reverse voltage protection.
2. LED includes integrated resistor for current limiting.

TYPICAL ELECTRICAL & OPTICAL OPERATING CHARACTERISTICS
(Ta = 25 degree C)

PART NUMBER	EMITTING COLOR	AMPERAGE mA	VOLTAGE Vdc	LUMENS	COLOR COORDINATES
LE-0603-04R	RED	13mA	24.0	2.00	630nm
LE-0603-04Y	YELLOW	12mA	24.0	2.00	595nm
LE-0603-04G	GREEN	6mA	24.0	9.00	525nm
LE-0603-04B	BLUE	11mA	24.0	2.00	470nm
LE-0603-04W	WHITE	9mA	24.0	10.00	x = 0.29 y = 0.28

REV. NO.	DESCRIPTION/ECO NUMBER	APPV'D DATE
H	CHANGE AMPERATE RATINGS	12/8/10
G	CHANGE DIA. TO 10.5 MAX.	11/10/09
F	CHANGE mA FROM 20 TO 12	10/29/09
E	CHANGE MOL FROM 42.0 MAX. TO 43.0 MAX.	1/22/09
D	CHANGE CHARTS ADD NOTES	8/25/08
C	ADD ELECT & OPTICAL INFO	3/9/07
B	ADD + MARKING-24V DC	10/3/06
A	CHNG. 04B MSCP TO .14	7/24/06
	ENGR. RELEASE & CANCEL PL-0603-04-1 TO -5	7/5/06

METRIC
THIRD ANGLE PROJECTION

DIMENSIONS ARE IN MILLIMETERS
TOLERANCE UNLESS OTHERWISE SPECIFIED
1 PL +/- 0.2
2 PL +/- 0
ANGLE +/- 0

JKL COMPONENTS CORPORATION

TITLE: LED FESTOON LAMP

DRAWN BY	APPV'D BY	DATE	SIZE	FSCM NO.	DRAWING NO.
L. WENGSTROM	L.R.	12/8/10	A	55335	LE-0603-04

- CAD DRAWING -
MANUAL REVISIONS NOT PERMITTED

SCALE	RELEASED DATE	REVISION DATE	REV. NO.	SHEET
NONE	7/5/06	12/8/10	H	1 OF 1

AMEYA360
Components Supply Platform

Authorized Distribution Brand :

Website :

Welcome to visit www.ameya360.com

Contact Us :

- ### Address :

  401 Building No.5, JiuGe Business Center, Lane 2301, Yishan Rd
  Minhang District, Shanghai , China

- ### Sales :

  Direct +86 (21) 6401-6692

  Email amall@ameya360.com

  QQ 800077892

  Skype ameyasales1 ameyasales2

- ### Customer Service :

  Email service@ameya360.com

- ### Partnership :

  Tel +86 (21) 64016692-8333

  Email mkt@ameya360.com