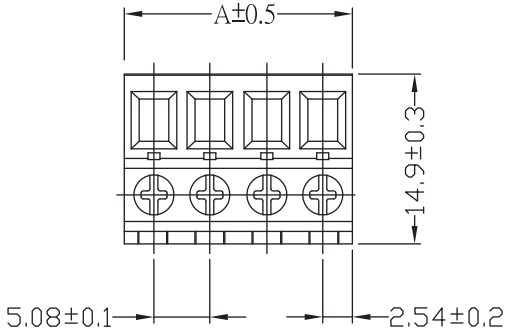

Pitch ： 5.08mm(0.200inch)					
Poles	A(mm)	A(inch)	Poles	A(mm)	A(inch)
2	10.16	0.400	15	76.20	3.000
3	15.24	0.600	16	81.28	3.200
4	20.32	0.800	17	86.36	3.400
5	25.40	1.000	18	91.44	3.600
6	30.48	1.200	19	96.52	3.800
7	35.56	1.400	20	101.60	4.000
8	40.64	1.600	21	106.68	4.200
9	45.72	1.800	22	111.76	4.400
10	50.80	2.000	23	116.84	4.600
11	55.88	2.200	24	121.92	4.800
12	60.96	2.400			
13	66.04	2.600			
14	71.12	2.800			

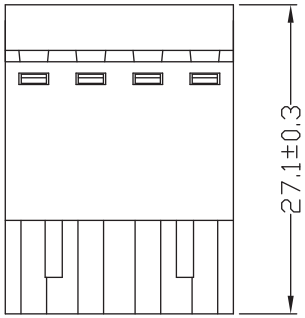

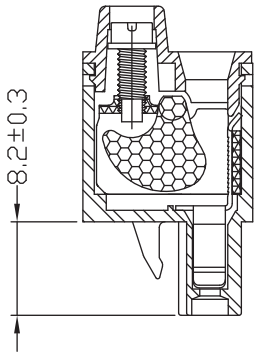

TECHNICAL CHARACTERISTICS

MATERIAL
INSULATOR: PA 66
FLAMABILITY RATING: UL94-V0
COLOR: GREEN
METAL HOUSING: STEEL ZINC PLATED
TERMINAL SCREW: STEEL ZINC PLATING
TERMINAL SCREW SLOT TYPE: "+"
WIRE GUARD: STEEL ZINC PLATING

ENVIRONMENTAL
OPERATING TEMPERATURE: -40 UP TO 105°C
COMPLIANCE: LEAD FREE AND ROHS

ELECTRICAL cULus
CURRENT RATING: 16A
WORKING VOLTAGE: 300VAC
WITHSTANDING VOLTAGE: 2KV
CONTACT RESISTANCE: 20 mOhm max

STANDARD
CERTIFIED E315414
CERTIFIED 40038804

MECHANICAL
SOLID WIRE: 24-12 AWG / 0.2-3.3MM²
STRANDED WIRE: 24-12 AWG / 0.2-3.3MM²
TORQUE: 4.5Lb-In / 0.45Nm

WIRE STRIPE LENGTH: 10MM
PITCH: 5.08MM

PACKAGING: BOX

SERIE 373B

RoHS Compliant

REV	DATE	FILE	BY
G			
F			
E			
D			
C			
B	02-JUN-14	VDE+REF CERTIF	AS
A	20-JUN-12	PDF	GG

PROJECTION:

APPROVAL: RJ

GENERAL TOLERANCE
.X = +/_ 0.2
.XX = +/_ 0.15

UNIT: MM
SCALE:
SHEET: 1/1
DRAW: MARVIN

WÜRTH ELEKTRONIK

DESCRIPTION: SERIE 373B - 5,08mm Vertical Cable Entry with Stamping Clamp - 3,3 mm² Wire

WERI PART NO: 691 373 500 0xx B

SIZE **A4**

AMEYA360
Components Supply Platform

Authorized Distribution Brand :

Website :

Welcome to visit www.ameya360.com

Contact Us :

- Address :

401 Building No.5, JiuGe Business Center, Lane 2301, Yishan Rd
Minhang District, Shanghai , China

- Sales :

Direct +86 (21) 6401-6692

Email amall@ameya360.com

QQ 800077892

Skype ameyasales1 ameyasales2

- Customer Service :

Email service@ameya360.com

- Partnership :

Tel +86 (21) 64016692-8333

Email mkt@ameya360.com