CY3280-MBR3 Evaluation Kit User Guide

Doc. #: 001-89905 Rev. *B

Cypress Semiconductor
198 Champion Court
San Jose, CA 95134-1709

Phone (USA): +1.800.858.1810
Phone (Intnl): +1.408.943.2600
http://www.cypress.com

Copyrights

© Cypress Semiconductor Corporation, 2014. The information contained herein is subject to change without notice. Cypress Semiconductor Corporation assumes no responsibility for the use of any circuitry other than circuitry embodied in a Cypress product. Nor does it convey or imply any license under patent or other rights. Cypress products are not warranted nor intended to be used for medical, life support, life saving, critical control or safety applications, unless pursuant to an express written agreement with Cypress. Furthermore, Cypress does not authorize its products for use as critical components in life-support systems where a malfunction or failure may reasonably be expected to result in significant injury to the user. The inclusion of Cypress products in life-support systems application implies that the manufacturer assumes all risk of such use and in doing so indemnifies Cypress against all charges.

Any Source Code (software and/or firmware) is owned by Cypress Semiconductor Corporation (Cypress) and is protected by and subject to worldwide patent protection (United States and foreign), United States copyright laws and international treaty provisions. Cypress hereby grants to licensee a personal, non-exclusive, non-transferable license to copy, use, modify, create derivative works of, and compile the Cypress Source Code and derivative works for the sole purpose of creating custom software and or firmware in support of licensee product to be used only in conjunction with a Cypress integrated circuit as specified in the applicable agreement. Any reproduction, modification, translation, compilation, or representation of this Source Code except as specified above is prohibited without the express written permission of Cypress.

Disclaimer: CYPRESS MAKES NO WARRANTY OF ANY KIND, EXPRESS OR IMPLIED, WITH REGARD TO THIS MATERIAL, INCLUDING, BUT NOT LIMITED TO, THE IMPLIED WARRANTIES OF MERCHANTABILITY AND FITNESS FOR A PARTICULAR PURPOSE. Cypress reserves the right to make changes without further notice to the materials described herein. Cypress does not assume any liability arising out of the application or use of any product or circuit described herein. Cypress does not authorize its products for use as critical components in life-support systems where a malfunction or failure may reasonably be expected to result in significant injury to the user. The inclusion of Cypress' product in a life-support systems application implies that the manufacturer assumes all risk of such use and in doing so indemnifies Cypress against all charges.

Use may be limited by and subject to the applicable Cypress software license agreement.

PSoC and CapSense are registered trademarks and EZ-Click and PSoC Creator are trademarks of Cypress Semiconductor Corp. All other trademarks or registered trademarks referenced herein are property of the respective corporations.

Flash Code Protection

Cypress products meet the specifications contained in their particular Cypress PSoC Data Sheets. Cypress believes that its family of PSoC products is one of the most secure families of its kind on the market today, regardless of how they are used. There may be methods, unknown to Cypress, that can breach the code protection features. Any of these methods, to our knowledge, would be dishonest and possibly illegal. Neither Cypress nor any other semiconductor manufacturer can guarantee the security of their code. Code protection does not mean that we are guaranteeing the product as 'unbreakable'.

Cypress is willing to work with the customer who is concerned about the integrity of their code. Code protection is constantly evolving. We at Cypress are committed to continuously improving the code protection features of our products.

Contents

Safety Information **5**

1. Introduction **7**

1.1 Kit Contents 8
1.2 Getting Started 8
1.3 Factory Default Configuration 9
1.4 Additional Learning Resources 9
1.5 Technical Support 9
1.6 Acronyms 9
1.7 Document Conventions 10

2. Kit Installation **11**

2.1 Before You Begin 11
2.2 CY3280-MBR3 EVK Software 11
2.3 Install the Software 12
2.4 Uninstall the Software 15

3. Kit Operation **16**

3.1 Powering the Kit 18
3.2 Communication Between PC Host and Kit 20
3.3 Configuring the CY8CMBR3116 Controller Using EZ-Click 2.0 21
3.4 Kit Features 28
3.4.1 SmartSense Auto-Tuning Feature 28

4. Hardware **32**

4.1 Board Details 32
4.2 Theory of Operation 33
4.3 Functional Description 34
4.3.1 CY8CMBR3116 CapSense Controller 34
4.3.2 PSoC 5LP 35
4.3.3 Power Supply System 36
4.3.4 Button Sensors and Proximity Loop Sensor 42
4.3.5 CY3280-MBR3 Kit LEDs 43
4.3.6 Buzzer, Shield, and Host Interrupt Multiplexing Jumper 44
4.3.7 Capacitance Variation Demonstration 46
4.3.8 Arduino-Compatible Headers 47
4.3.9 Push Button to Reset CY8CMBR3116 50
4.3.10 I2C Selection Jumpers 50

5. Configuration Files and Example Projects **51**

5.1 Running Configuration Files and Host Projects 51

5.2 Configuration Files 51
5.2.1 LED Toggle 52
5.2.2 Proximity Detection 55
5.2.3 Water Tolerance 58
5.3 PSoC 4 Host Example Projects 62
5.3.1 Host_LED_Toggle_Buzzer_PSoC4_Pioneer_Kit 63
5.3.2 Host_Interrupt_LED_ON_Time_PSoC4_Pioneer_Kit 68
5.3.3 Configuring the MBR3 Device From the PSoC 4 Pioneer Kit 72

6. Advanced Topics 74

6.1 Using PSoC 5LP as USB-I2C Bridge 74
6.2 Restoring to Factory Default Slave Address from 0x00 78

A. Appendix 79

A.1 Schematic 79
A.2 Pin Assignment Table 87
A.3 Bill of Materials 88
A.4 Regulatory Compliance Information 89

Safety Information

Regulatory Compliance

The CY3280-MBR3 Evaluation Kit is intended for use as a development platform for hardware or software in a laboratory environment. The board is an open system design, which does not include a shielded enclosure. This may cause interference to other electrical or electronic devices in close proximity.

In a domestic environment, this product may cause radio interference. The user may then be required to take adequate prevention measures. Also, the board should not be used near any medical equipment or RF devices.

Attaching additional wiring to this product or modifying the product operation from the factory default may affect its performance and cause interference with other apparatus in the immediate vicinity. If such interference is detected, suitable mitigating measures should be taken.

The CY3280-MBR3 Evaluation Kit as shipped from the factory has been verified to meet the requirements of CE as a Class A product.

The CY3280-MBR3 Evaluation Kit contains electrostatic discharge (ESD) sensitive devices. Electrostatic charges readily accumulate on the human body and any equipment, and can discharge without detection. Permanent damage may occur on devices subjected to high-energy discharges. Proper ESD precautions are recommended to avoid performance degradation or loss of functionality. Store unused CY3280-MBR3 boards in the protective shipping package.

End-of-Life/Product Recycling

This kit has an end-of life five years from the date of manufacture mentioned on the back of the box. Contact your nearest recycler for disposing the kit.

General Safety Instructions

ESD Protection

ESD can damage boards and associated components. Cypress recommends that you perform procedures only at an ESD workstation. If an ESD workstation is not available, use appropriate ESD protection by wearing an antistatic wrist strap attached to chassis ground (any unpainted metal surface) on your board when handling parts.

Handling Boards

CY3280-MBR3 boards are sensitive to ESD. Hold the board only by its edges. After removing the board from its box, place it on a grounded, static-free surface. Use a conductive foam pad if available. Do not slide board over any surface.

1. Introduction

Thank you for your interest in the CY3280-MBR3 Evaluation Kit (EVK). This kit is designed to showcase the abilities of the CY8CMBR3116 register-configurable CapSense® controller. It is also designed as an Arduino™-compatible shield that supports various Arduino baseboards as well as other stackable shields available in the market. The CY3280-MBR3 EVK features four CapSense buttons, one proximity sensor loop, LEDs, a buzzer, and an onboard USB-I^{2}C bridge to communicate with the EZ-Click™ 2.0 customizer tool, which configures the CY8CMBR3xxx controller.

The CY8CMBR3xxx series is the latest addition to the register-configurable CapSense Mechanical Button Replacement (MBR) family of solutions. The CY8CMBR3xxx family of controllers enables you to quickly and easily add capacitive touch sensing to your user interface. See Configuring the CY8CMBR3116 Controller Using EZ-Click 2.0 on page 21 for information on how to configure a CY8CMBR3116 controller. CY3280-MBR3 offers the best features of Cypress' CapSense in a small package that is easy to implement and configure. Coupled with the Capacitive Sigma Delta PLUS (CSD PLUS) sensing algorithm and the patented SmartSense™ Auto-Tuning feature, the CY8CMBR3xxx controller provides a robust capacitive sensing solution, with up to 16 CapSense inputs.

SmartSense Auto-Tuning has the following advantages:

- Reduces design effort by eliminating manual tuning
- Adapts to variations in PCB, overlay, paint, and manufacturing that degrade touch-sensing performance
- Eliminates manual tuning in production
- Adapts to changes in the system environment due to noise
- Allows a platform design approach with different overlays, button shapes, and trace lengths

The MBR3 solution delivers a high signal-to-noise ratio (SNR) even in extremely noisy environments and maintains optimal sensor performance at run time. The driven shield capability offers robust proximity sensing and water tolerance, enabling its use in a wide range of applications. The MBR3 solution supports register configurability and SmartSense Auto-Tuning features, which allow customers to gain a faster time-to-market for their end product.

The CY8CMBR3xxx family of controllers is designed with multiple low-power operational states to meet the low-power requirements of battery-powered applications. These controllers have the following operational states: Boot, Active, Look-for-Touch, Look-for-Proximity, Deep Sleep, and Configuration. The CY8CMBR3xxx controllers automatically manage transitions between the four states. The Look-for-Proximity state allows ultra-low power consumption when a human body is not in close proximity. This state is entered only if the wake-on-approach feature is enabled (and toggle is disabled) in the MBR3 register configuration, which can be done using the EZ-Click 2.0 customizer tool. Refer to the MBR3 device datasheet for more details on the CY8CMBR3xxx family of CapSense controllers.

The kit package includes the EZ-Click 2.0 customizer tool, which is required to configure the kit. For more information and to download the tool, visit the EZ-Click Customizer page.

1.1 Kit Contents

The CY3280-MBR3 EVK includes the following components (see Figure 1-1):

- CY3280-MBR3 EVK with a 2-mm overlay
- One additional overlay of 1-mm thickness
- A to Mini-B USB cable
- Water dropper

Figure 1-1. Kit Contents

Inspect the contents of the kit. If you find any part missing, contact your nearest Cypress sales office for help: www.cypress.com/go/support.

1.2 Getting Started

This kit guide helps to familiarize you with the CY3280-MBR3 EVK. The Kit Installation chapter on page 11 describes the installation of the EVK software. The Kit Operation chapter on page 16 explains how to configure the CY8CMBR3116 controller on the kit to test different features using the EZ-Click 2.0 customizer tool. The hardware details, and configuration files and example projects are explained in their respective chapters. The configuration files and example projects require EZ-Click and PSoC Creator™, respectively. The Advanced Topics chapter on page 74 describes how to use the Bridge Control Panel (BCP) to configure the MBR3 device. The Appendix on page 79 provides the schematics, board layout, pin assignment, and the bill of materials (BOM).

1.3 Factory Default Configuration

The kit installation folder includes three configuration files that demonstrate several features of the CY8CMBR3116 CapSense controller. The section, Configuration Files on page 51, provides more details. The CY3280-MBR3 EVK is configured with the *Water Tolerance* configuration by default. In this configuration, water tolerance, flanking sensor suppression (FSS), and auto-reset features are enabled for four CapSense buttons. The LEDs are also enabled to provide visual feedback for CapSense button touch. For more details on configuring the MBR3 device, refer to the EZ-Click 2.0 Customizer Tool User Guide, available at `<Install_Directory>\EZ-Click\<version>\Documentation`.

1.4 Additional Learning Resources

Visit the CY8CMBR3116 CapSense Controller page for additional learning resources.

1.5 Technical Support

For assistance, go to our support web page, or contact our customer support at +1(800) 541-4736 extension 2 (in the USA), or +1 (408) 943-2600 extension 2 (International).

1.6 Acronyms

Table 1-1. Acronyms Used in the Document

Acronyms	Definition
BCP	Bridge Control Panel
BOM	bill of materials
CS	capacitive sensor
CSD	CapSense sigma delta
ESD	electrostatic discharge
EVK	evaluation kit
FSS	flanking sensor suppression
GPO	general-purpose output
GUI	graphical user interface
IIC/I^2C	inter-integrated circuit
LED	light-emitting diode
MBR	mechanical button replacement
NC	not connected
PC	personal computer
PCB	printed circuit board
PSoC®	Programmable System-On-Chip
SNR	signal-to-noise ratio
UART	universal asynchronous receiver/transmitter
USB	universal serial bus

1.7 Document Conventions

Table 1-2. Document Conventions for Guides

Convention	Usage
Courier New	Displays file locations, user entered text, and source code: `C:\...cd\icc\`
Italics	Displays file names and reference documentation: Read about the *sourcefile.hex* file in the *PSoC Designer User Guide*.
[**Bracketed, Bold**]	Displays keyboard commands in procedures: [**Enter**] or [**Ctrl**] [**C**]
File > Open	Represents menu paths: File > Open > New Project
Bold	Displays commands, menu paths, and icon names in procedures: Click the **File** icon and then click **Open**.
Times New Roman	Displays an equation: 2 + 2 = 4
Text in gray boxes	Describes Cautions or unique functionality of the product.

2. Kit Installation

This chapter describes the CY3280-MBR3 EVK software installation and the prerequisites.

2.1 Before You Begin

All Cypress software installations require administrator privileges, but these are not required to run the software after it is installed. Close any other Cypress software that is currently running before installing the kit software.

Note: The kit contents are installed in the `C:\Program Files\Cypress` folder by default. If the EZ-Click configuration files or PSoC 4 host projects are being run from the default install location, administrator privileges are required. If you do not have administrator privileges, copy the `Firmware` folder from the default install location to any other location on your PC and access the files.

2.2 CY3280-MBR3 EVK Software

The kit requires Cypress' proprietary software, such as PSoC Programmer and the EZ-Click customizer tool, and generic software such as .NET Framework, Windows Installer, and Internet Explorer. The CY3280-MBR3 software is available on the kit web page in three formats:

Table 2-1. Kit Software Formats

Install Package	File Format	Usage
CY3280-MBR3_Kit ISO	ISO	This package can be used if the PC does not have any Cypress or non-Cypress prerequisite software installed. It first installs the prerequisites and then the kit content (firmware, hardware, and documentation files) in the specified location.
CY3280-MBR3_Kit Setup	EXE	This package can be used if the PC does not have any Cypress prerequisite software installed. If any non-Cypress prerequisites are found to be missing during installation, the installer provides links to download and install them and then installs the kit content (firmware, hardware, and documentation files) in the specified location.
CY3280-MBR3_Kit Only	EXE	This package can be used if the PC has all the Cypress and non-Cypress prerequisites installed. It installs only the kit content (firmware, hardware, and documentation files) in the specified location. If any of the prerequisites are found missing during the installation process, the installer prompts you to install all the required software before attempting to install the kit. The installer redirects to the kit web page to download and install any missing Cypress software. Similarly, it provides links to download and install the missing non-Cypress prerequisites.

Notes:

- Adobe Reader is required to view kit documents. If Adobe Reader is not installed on your PC, the installer provides the link to download and install it.

- PSoC Creator is required to execute the PSoC 4 host example projects shipped with the kit. However, it is not a mandatory prerequisite and is not installed along with the kit contents. You can download and install PSoC Creator from www.cypress.com/go/psoccreator.

2.3 Install the Software

1. Run *cyautorun.exe* in the kit ISO to start the installation process.
2. Click **Install CY3280-MBR3 EVK** to start the kit installation; see Figure 2-1.

Figure 2-1. Kit Installer Startup Screen

3. Select the folder to install the CY3280-MBR3 EVK files. Choose the directory and click **Next,** as shown in Figure 2-2. The installation directory is referred to as `<Install_Directory>` in this document.

Figure 2-2. Default Path for EVK Installation

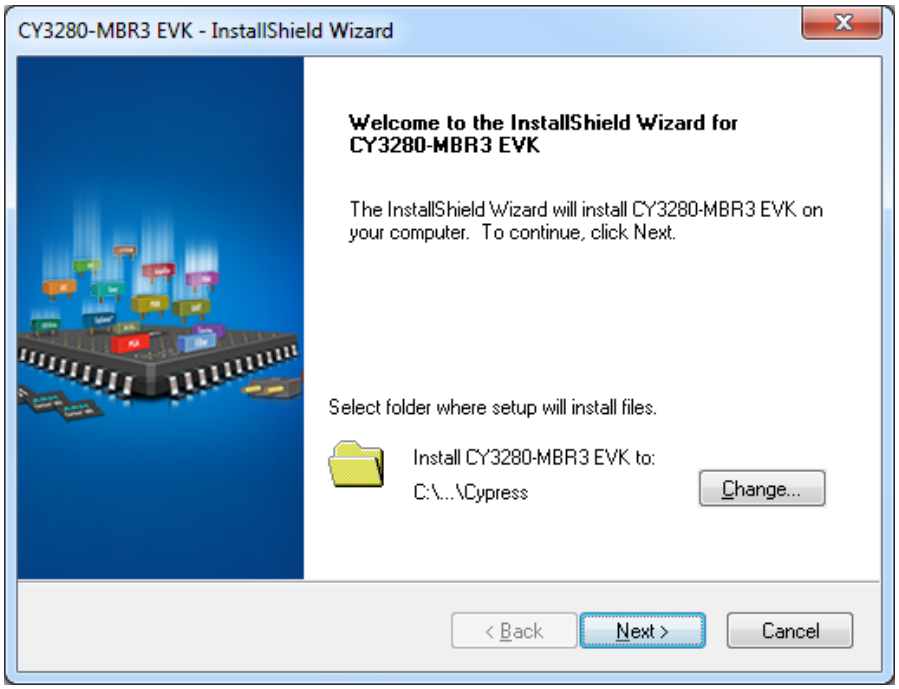

4. When you click **Next**, the *CY3280-MBR3_Kit ISO* installer automatically installs the required software, if it is not present on your computer.
5. Select the installation type (see Figure 2-3). The drop-down menu contains three options: **Typical** (installs all the required features), **Custom** (lets you choose the features to be installed), and **Complete** (installs all the contents). Click **Next** after you select the installation type.

   Note: It is recommended that you choose the **Complete** installation type.

Figure 2-3. Installation Type Options

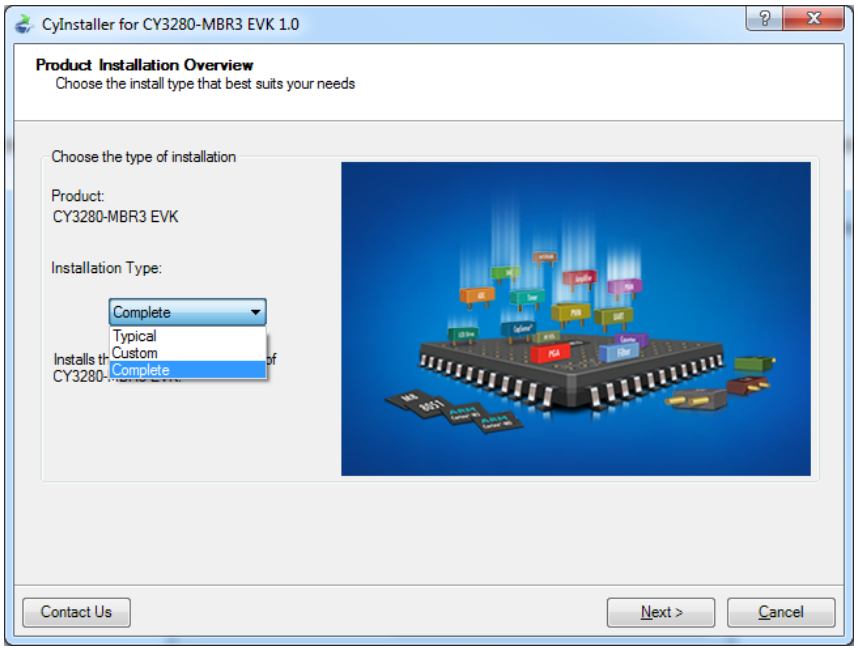

6. Accept the End-User License Agreement and click **Next** to proceed with the installation.
7. When the installation begins, a list of packages appears on the installation page. A green check mark appears adjacent to every package after successful installation, as Figure 2-4 shows.

Figure 2-4. Installation Page

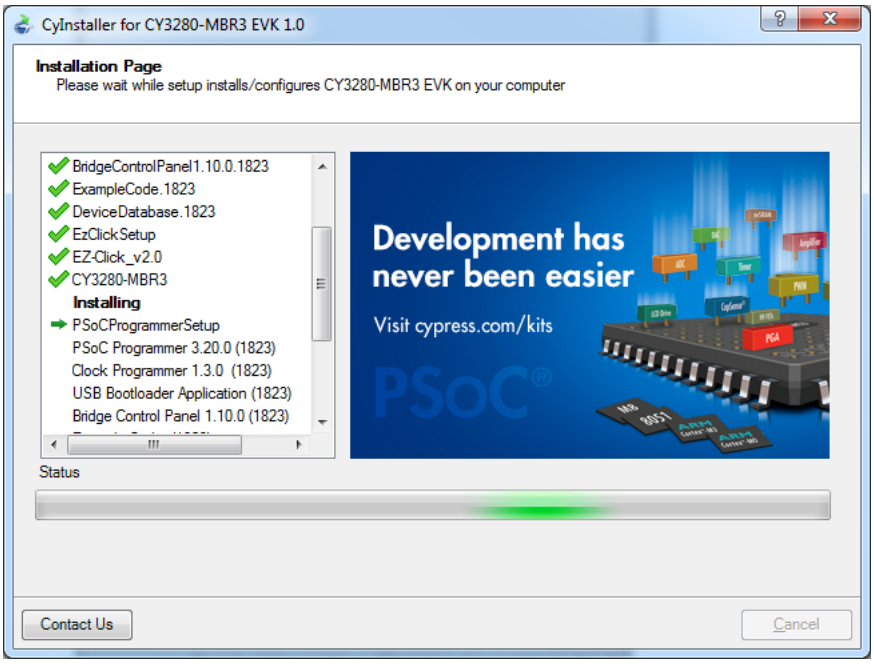

8. Click **Finish** to complete the CY3280-MBR3 EVK installation, as illustrated in Figure 2-5.

Figure 2-5. CY3280-MBR3 EVK Installation Complete

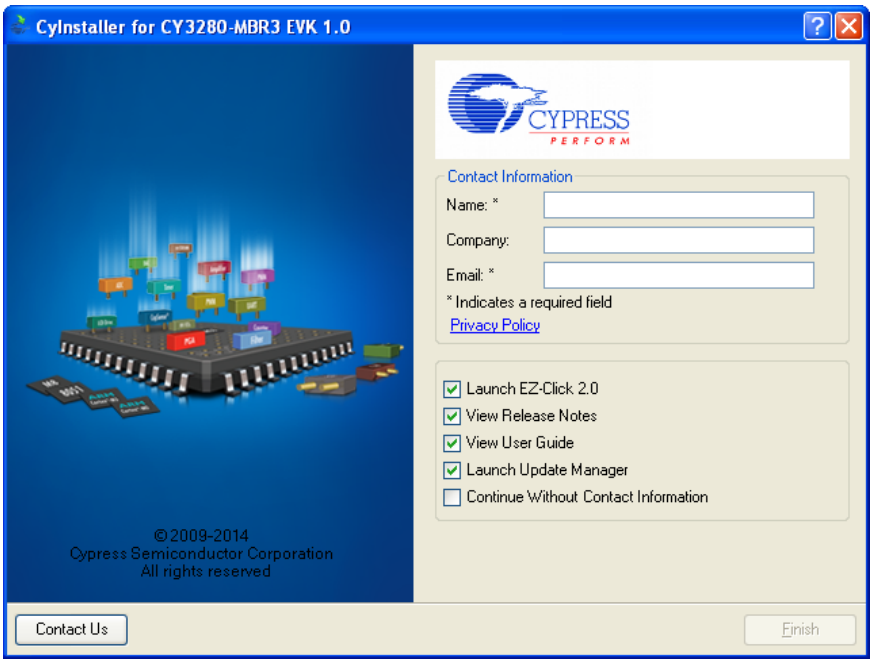

After the installation is complete, the kit contents are available at the following location:

```
<Install_Directory>\CY3280-MBR3 EVK\<version>
```

2.4 Uninstall the Software

You can uninstall the CY3280-MBR3 EVK software using one of the following methods:

- Go to **Start** > **All Programs** > **Cypress** > **Cypress Update Manager** > **Cypress Update Manager**; select the **Uninstall** button corresponding to the kit software.
- Go to **Start** > **Control Panel** > **Programs and Features**; select the **Uninstall/Change** button corresponding to the kit software.

3. Kit Operation

The CY8CMBR3116 CapSense controller is a register-configurable device that supports multiple features, as listed in Kit Features on page 28. The CY3280-MBR3 EVK hardware includes four CapSense buttons, a proximity sensor loop, a buzzer, and LEDs; it can be used to demonstrate all the features of the MBR3 device.

The CY3280-MBR3 EVK enables you to develop applications using the CY8CMBR3116 controller. Figure 3-1 and Figure 3-2 illustrate the onboard components of the CY3280-MBR3 EVK.

Figure 3-1. CY3280-MBR3 EVK Top View

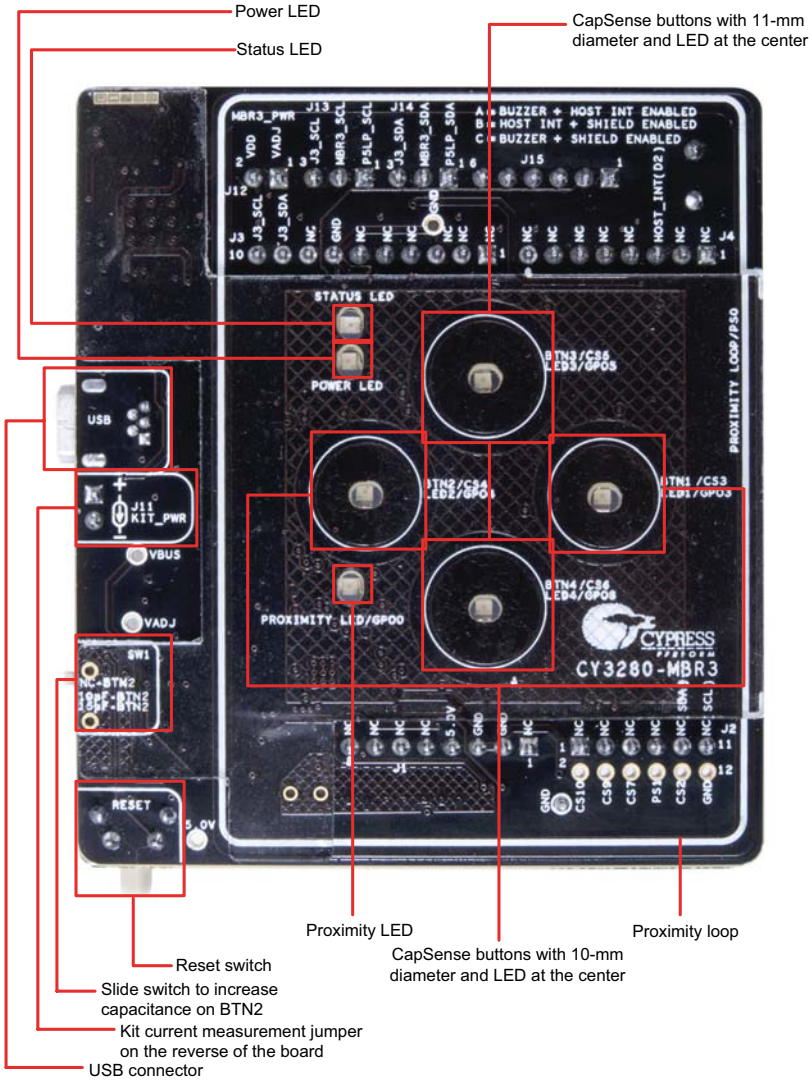

Figure 3-2. CY3280-MBR3 EVK Bottom View

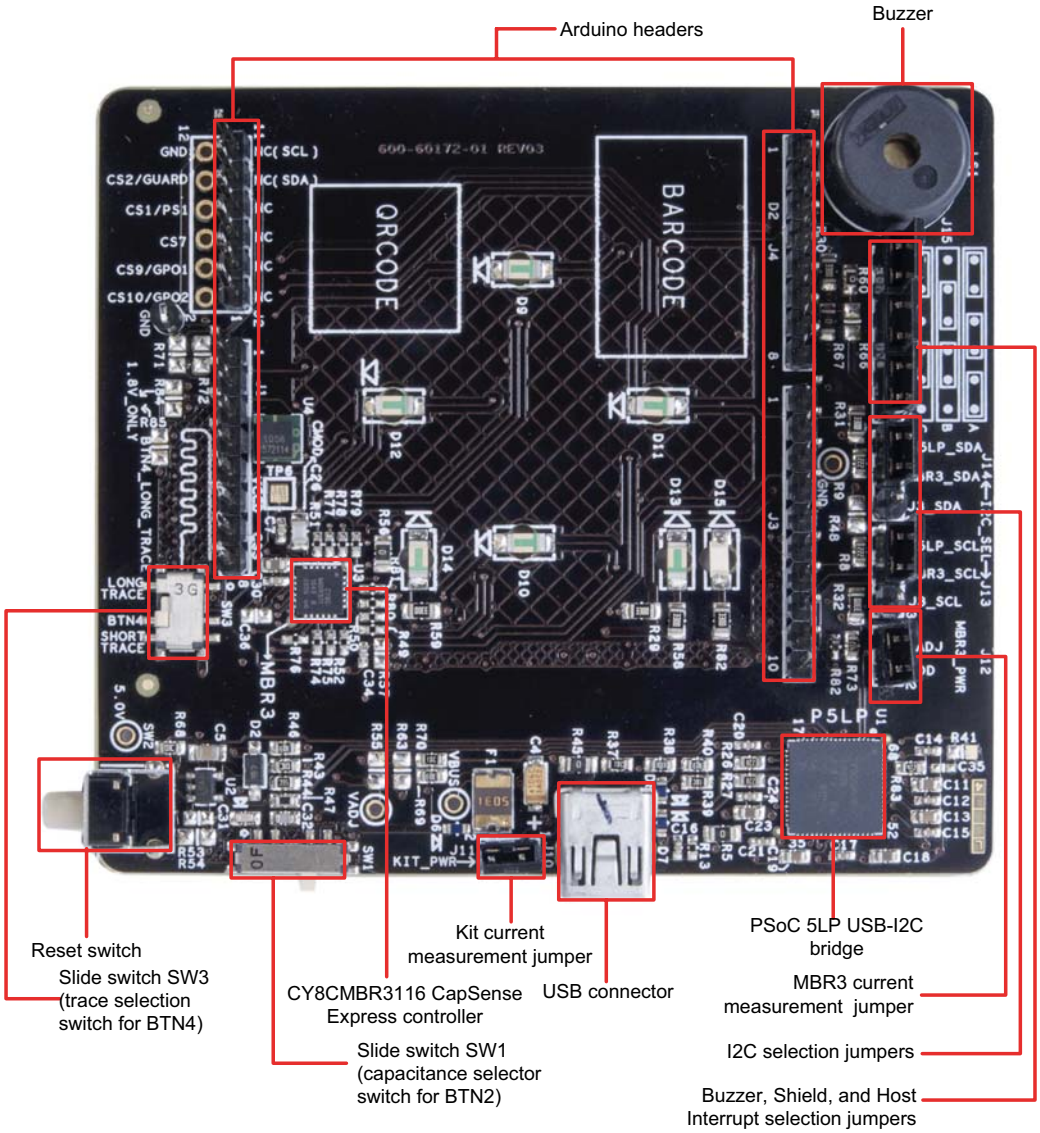

3.1 Powering the Kit

To power the kit, connect the A to Mini-B USB cable, provided with the kit, to your PC or laptop. The kit enumerates as a composite device (see Table 3-1), and three separate devices appear under the Device Manager (**Start** > **Control Panel** > **Device Manager**) option of the Windows operating system, as shown in Figure 3-5.

Table 3-1. CY3280-MBR3 Evaluation Kit in Device Manager after Enumeration

Port	Description
USB input device	USB-I^{2}C bridge
KitProg programmer	Programmer and debugger
KitProg USB-UART	USB-UART bridge appears as COM# port

Note: Although the kit supports a programmer and a UART bridge, these functionalities are not used with this kit. Do not use PSoC Programmer to communicate with the PSoC 5LP on the kit, as it may corrupt the kit firmware.

Figure 3-3. KitProg Driver Installation

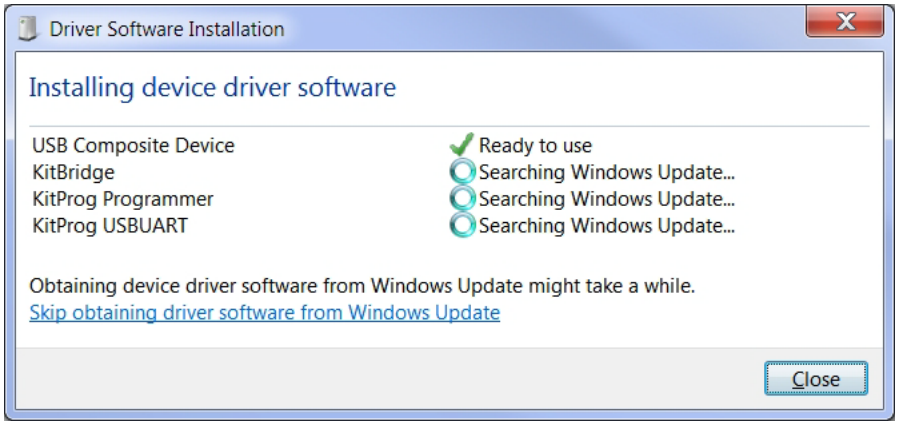

Figure 3-4. KitProg Driver Installation Complete

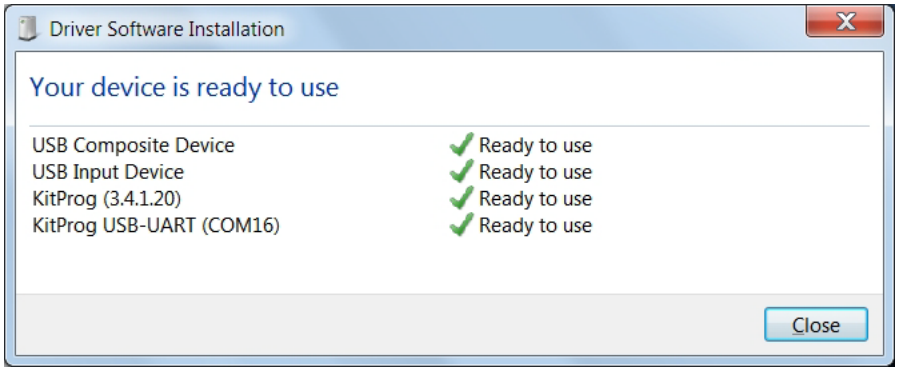

After the driver installation is complete, all the above devices are listed in the Device Manager, as shown in Figure 3-5.

Figure 3-5. Device Manager View after KitProg is Installed

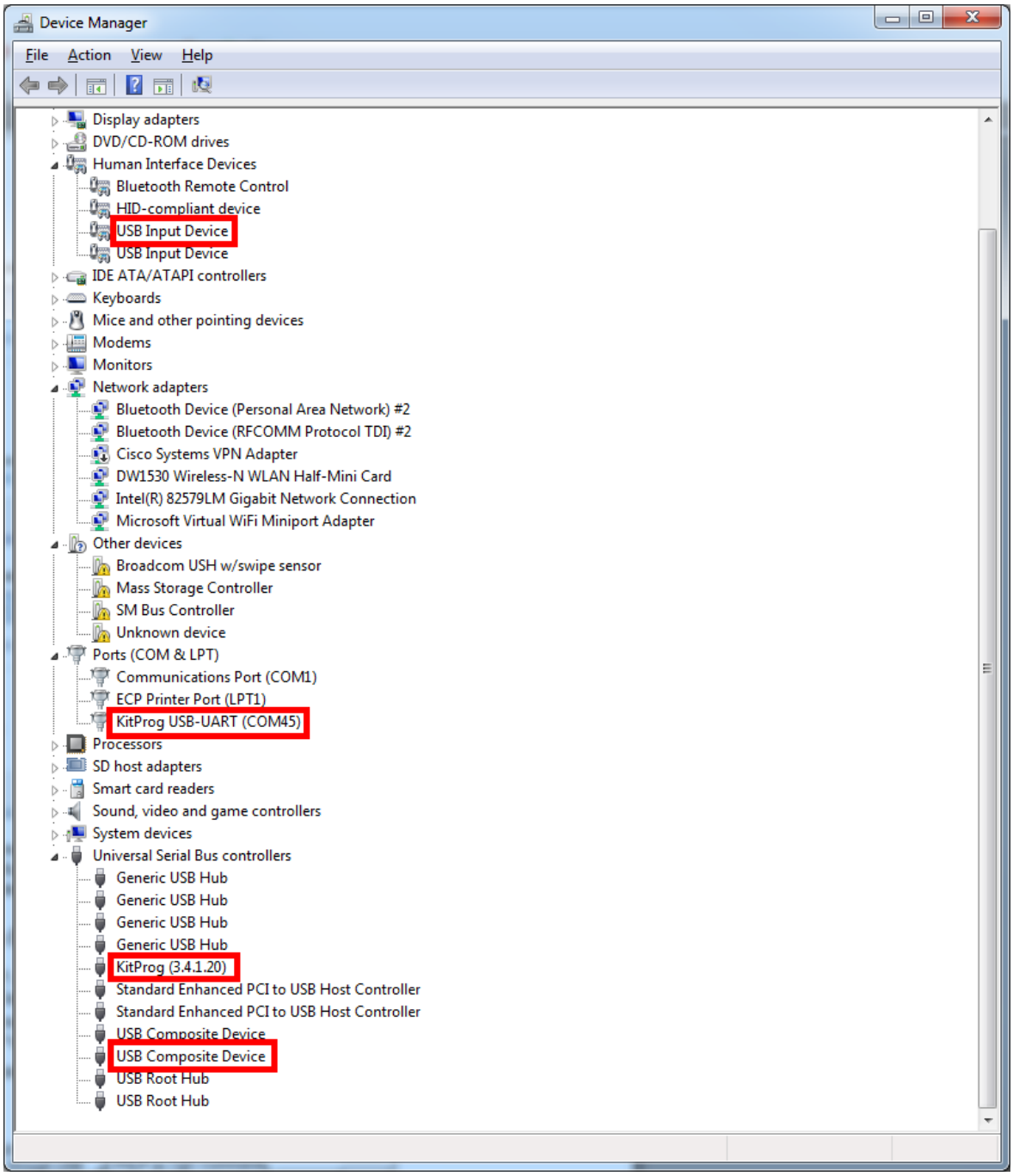

Note: The Device Manager may have more than one instance of 'USB Input Device' and 'USB Composite Device', based on the number of USB devices connected to your PC. The USB Input Device and USB Composite Device installed with KitProg can be identified by the hardware IDs (VID and PID); these devices will have hardware IDs 0x4B4 and 0xF139. To find the hardware ID, right-click on the device and select **Properties**. In the **Details** tab, select **Hardware IDs** from the **Property** field drop-down menu.

Wait until the USB enumeration completes successfully and the board is powered. When the USB enumeration is successful, both the power LED and status LED light up.

The kit is programmed with the *Water Tolerance* configuration by default. See Water Tolerance on page 58 for more information.

3.2 Communication Between PC Host and Kit

The kit includes PSoC 5LP, an ARM-based PSoC that functions as a USB-I^{2}C bridge between the CY8CMBR3116 controller and the PC host (see Figure 3-6). The CY8CMBR3116 controller communicates with PSoC 5LP using an I^{2}C interface, and the PSoC 5LP transfers the data over USB to the PC and EZ-Click 2.0 customizer tool.

Figure 3-6. Block Diagram - Communication Between PC Host and Kit

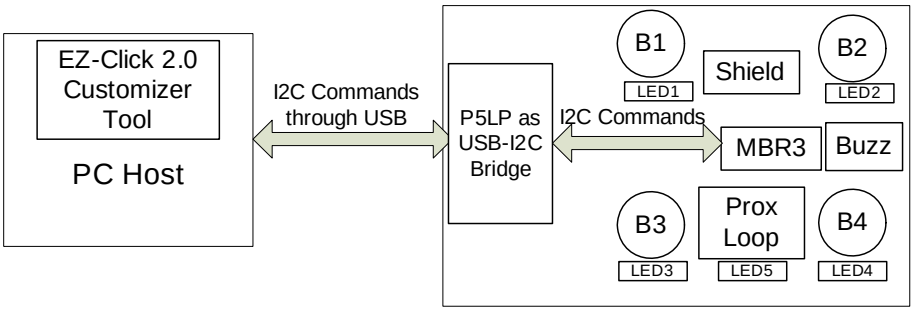

Cypress provides two USB-I^{2}C software utilities: EZ-Click 2.0 and Bridge Control Panel (BCP). The CY3280-MBR3 EVK uses the EZ-Click 2.0 customizer tool for register configuration. BCP is the software provided by Cypress that allows you to communicate over I^{2}C, SPI, or RX8 using your PC and USB. This application currently supports CY3240, MiniProg3, FirstTouch, FirstTouchRF, TrueTouch-Bridge, DVKProg1, and KitProg bridges. See Using PSoC 5LP as USB-I2C Bridge on page 74 for more details on using the BCP.

You should install the EZ-Click 2.0 customizer tool on the PC to evaluate the kit features. This software is part of the kit installer, but it can also be downloaded from www.cypress.com/go/CY3280-MBR3. You can use EZ-Click 2.0 to configure the CapSense controllers using I^{2}C communication over the USB-I^{2}C bridge. You can also use it to monitor raw count, baseline, SNR, and other CapSense sensor-related information directly.

Figure 3-7. EZ-Click 2.0 Customizer Tool – Start Page

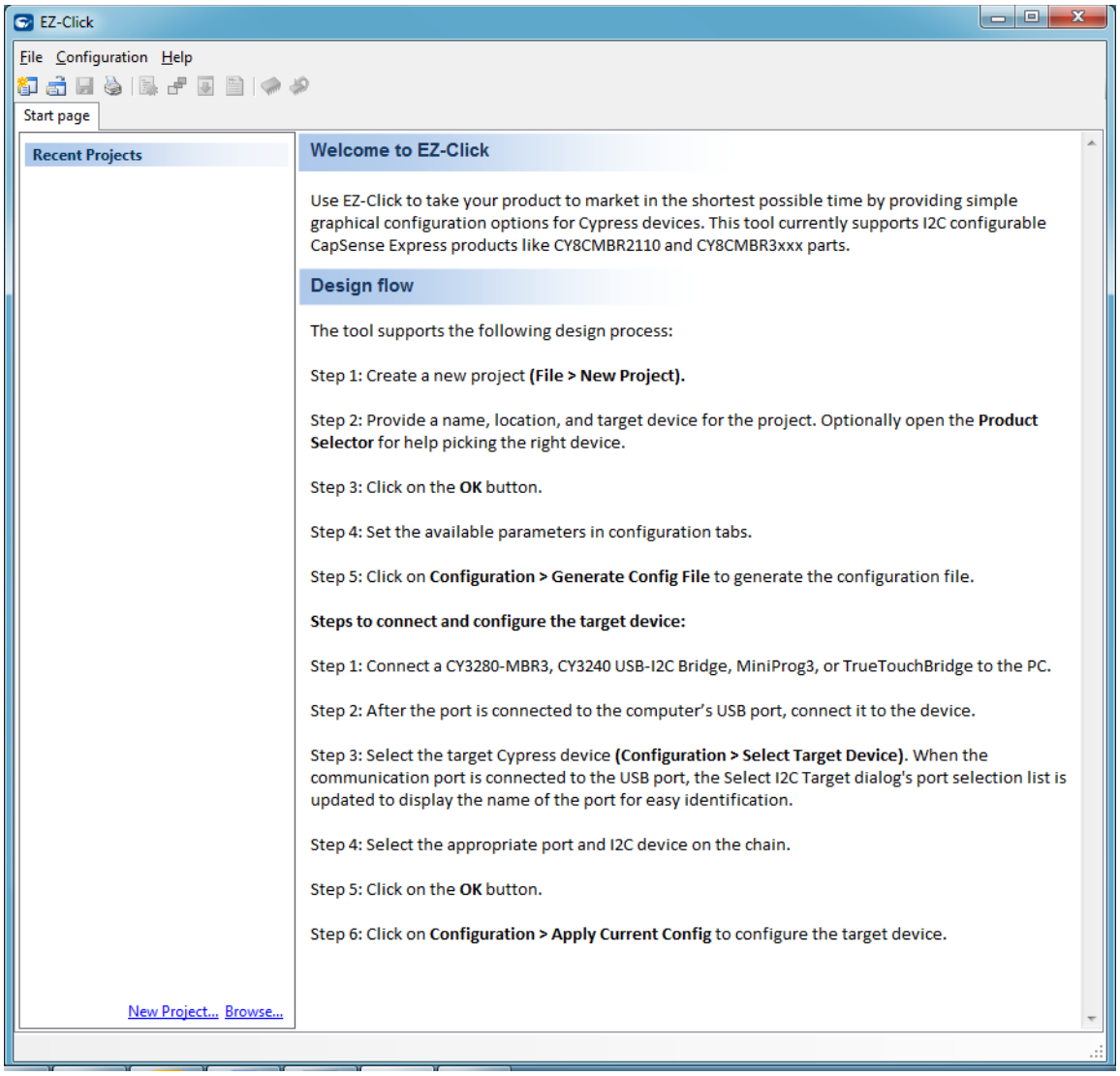

3.3 Configuring the CY8CMBR3116 Controller Using EZ-Click 2.0

Follow these steps to configure the CY8CMBR3116 controller:

1. Connect the CY3280-MBR3 EVK to the PC via the USB port using the USB cable.
2. Open the EZ-Click 2.0 customizer tool from the default location: **Start** > **All Programs** > **Cypress** > **EZ-Click 2.0** > **EZ-Click 2.0**.
3. Create a new project in EZ-Click 2.0 by clicking **New Project…** in the File menu, as shown in Figure 3-8.

Figure 3-8. Creating a New Project in EZ-Click 2.0

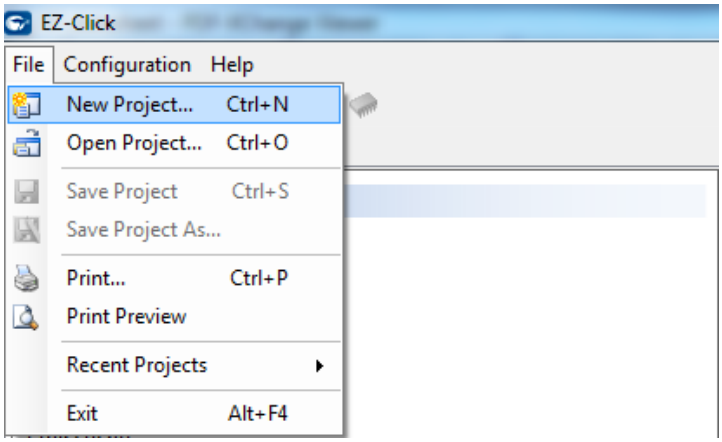

4. Enter an appropriate name for the project and choose a location to save your project. Select **Target Device** as 'CY8CMBR3116' from the Product Selector. To launch the Product Selector, click the **Device Selector** button, as shown in the following figure.

Figure 3-9. New Project Details

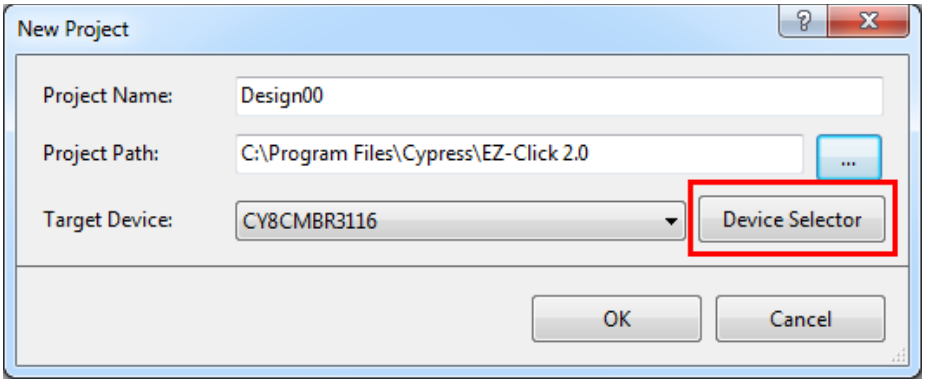

Figure 3-10. Choosing Part Number in Product Selector Guide

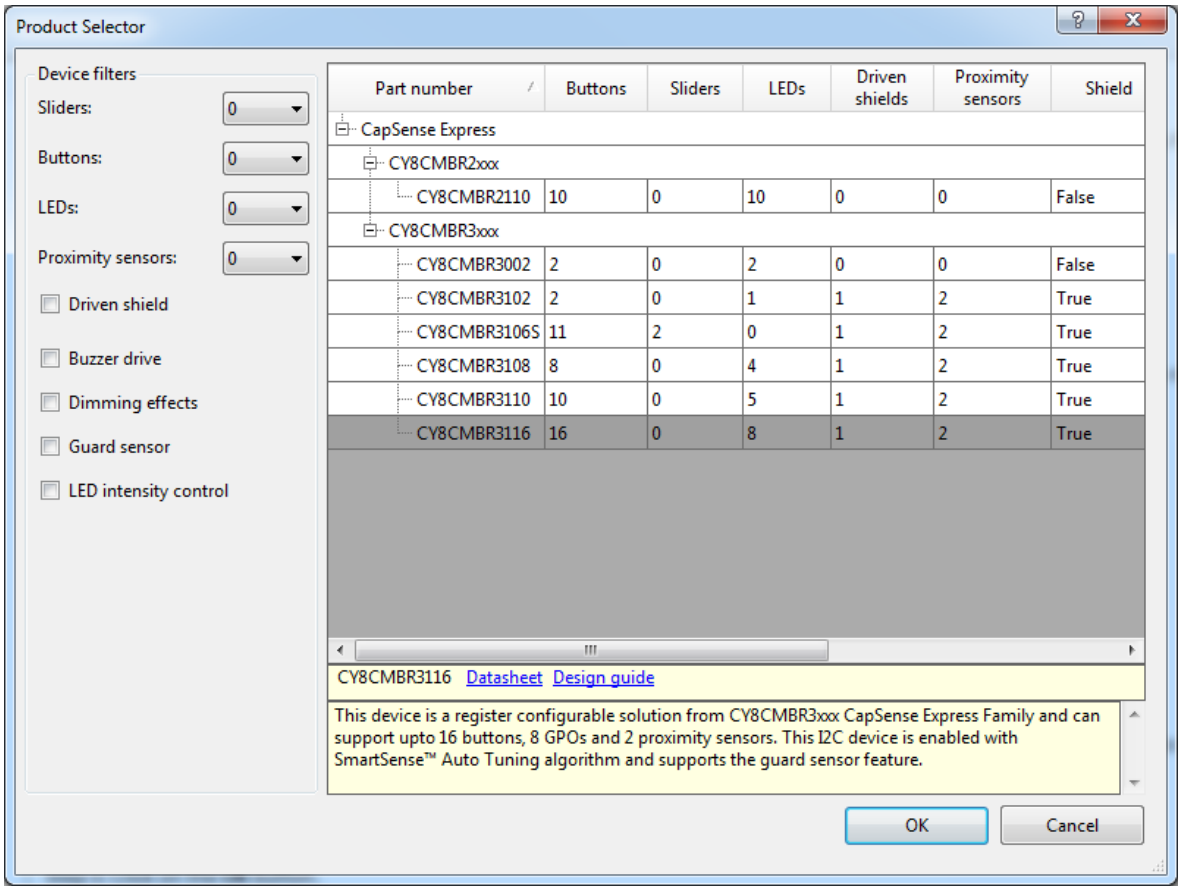

5. Ensure that the I^{2}C selection jumpers J13 and J14 are shorted between pins 1 and 2 to allow communication with the onboard PSoC 5LP USB-I^{2}C bridge.
6. Connect the kit to the EZ-Click customizer tool by clicking the **Select Target Device** button ( ) on the EZ-Click tool bar. This opens a **Select I2C Target** window (Figure 3-11); select the following:
   a. KitProg/<kit number> in the **Ports** window.
   b. The I^{2}C slave device in the **Devices** window.
   Note: The CY8CMBR3116 has a slave address of 0x37 by default. If multiple slave devices are connected, you can disconnect from one slave and connect to another by using the **Connect/Disconnect** button in the **Select I2C Target** window. See Figure 3-11.
   c. Select the speed of the I^{2}C communication as **400 kHz**.
   d. Choose the target device voltage by selecting the **3.3 V** radio button.

Figure 3-11. Connecting the Kit Using the EZ-Click 2.0 Customizer Tool

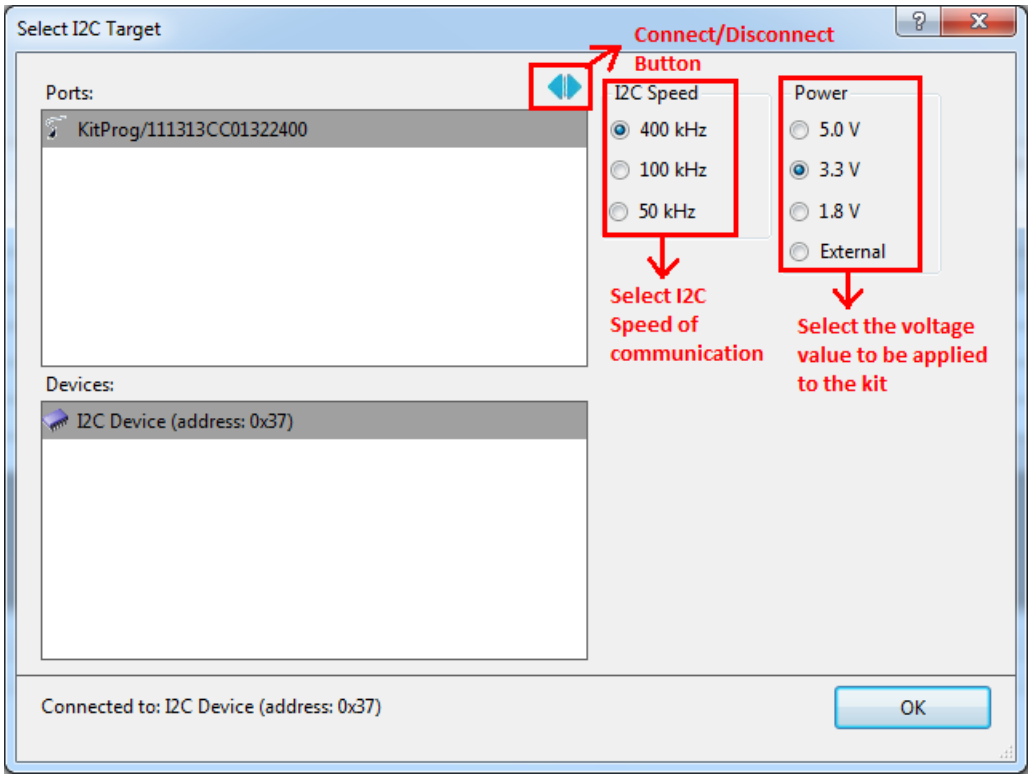

7. Click **OK**. The I^{2}C slave address of the connected device appears on the status bar at the bottom of the EZ-Click window, as shown in Figure 3-12.

Figure 3-12. I^{2}C Slave Address Display

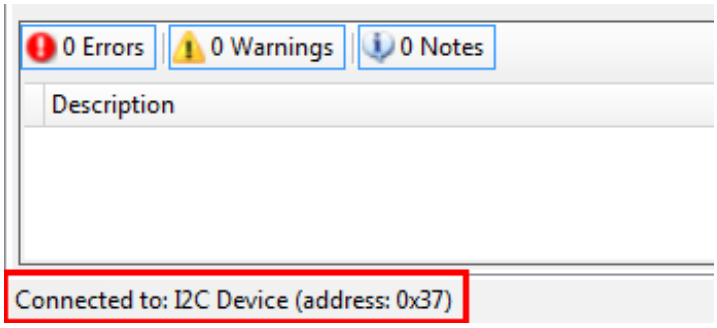

8. Enable the button sensors in the **CapSense sensor configuration** tab, as shown in Figure 3-13. See Pin Mapping Between CY8CMBR3116 and CY3280-MBR3 EVK on page 35 to learn about the available button sensors and how they are connected to the CY8CMBR3116 device. In this example, all four available button sensors on the kit are enabled.

Figure 3-13. Enabling Button Sensors Using EZ-Click 2.0

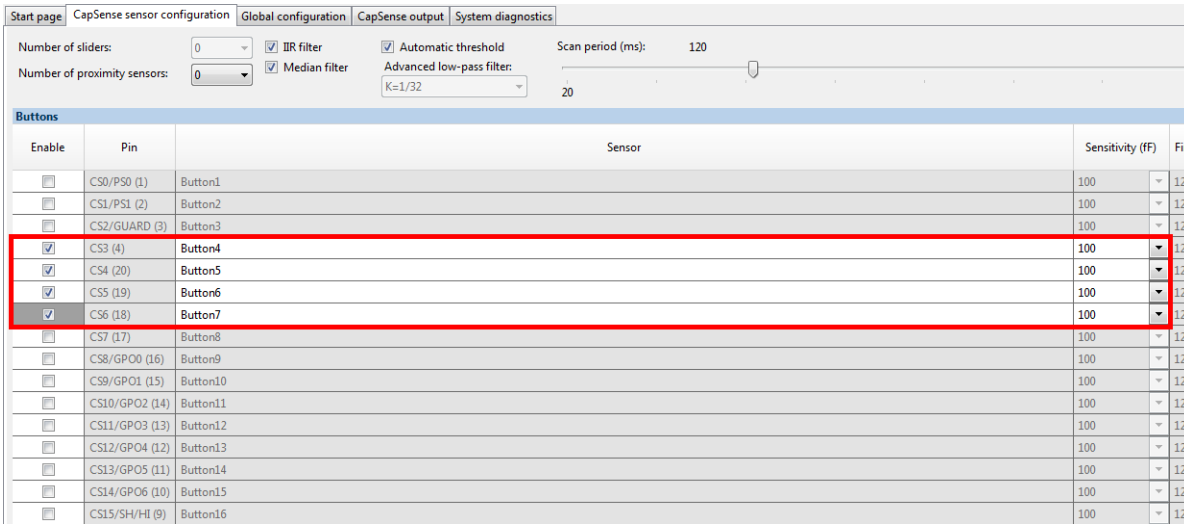

Note: The CapSense buttons BTN1/CS3, BTN2/CS4, BTN3/CS5, and BTN4/CS6 on the CY3280-MBR3 EVK correspond to Button4, Button5, Button6, and Button7 in the EZ-Click 2.0 customizer tool, which map to pins CS3, CS4, CS5, and CS6 respectively on the MBR3 device. Figure 3-15 shows the corresponding four buttons for reference.

9. The sensor names can be modified if desired, as shown in Figure 3-14.

Figure 3-14. Changing Sensor Names

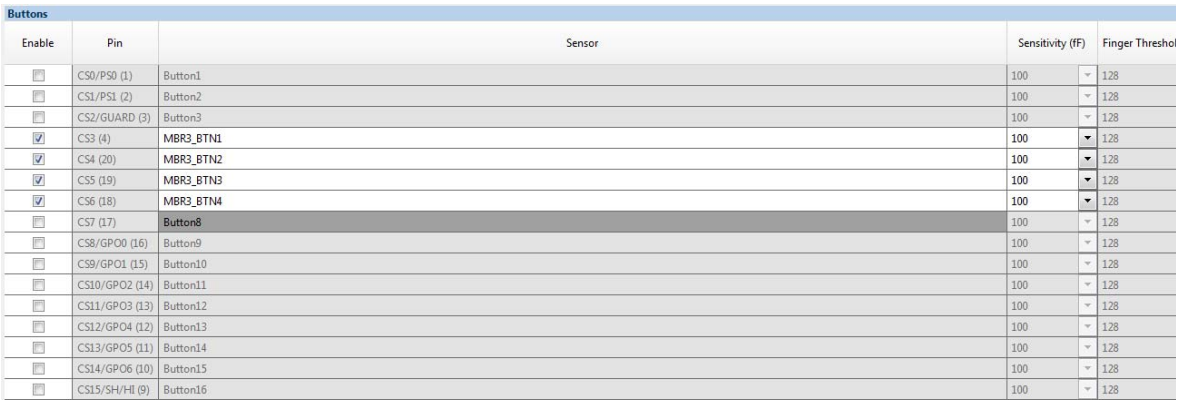

Figure 3-15. Kit Buttons Corresponding to CapSense Sensor Pins

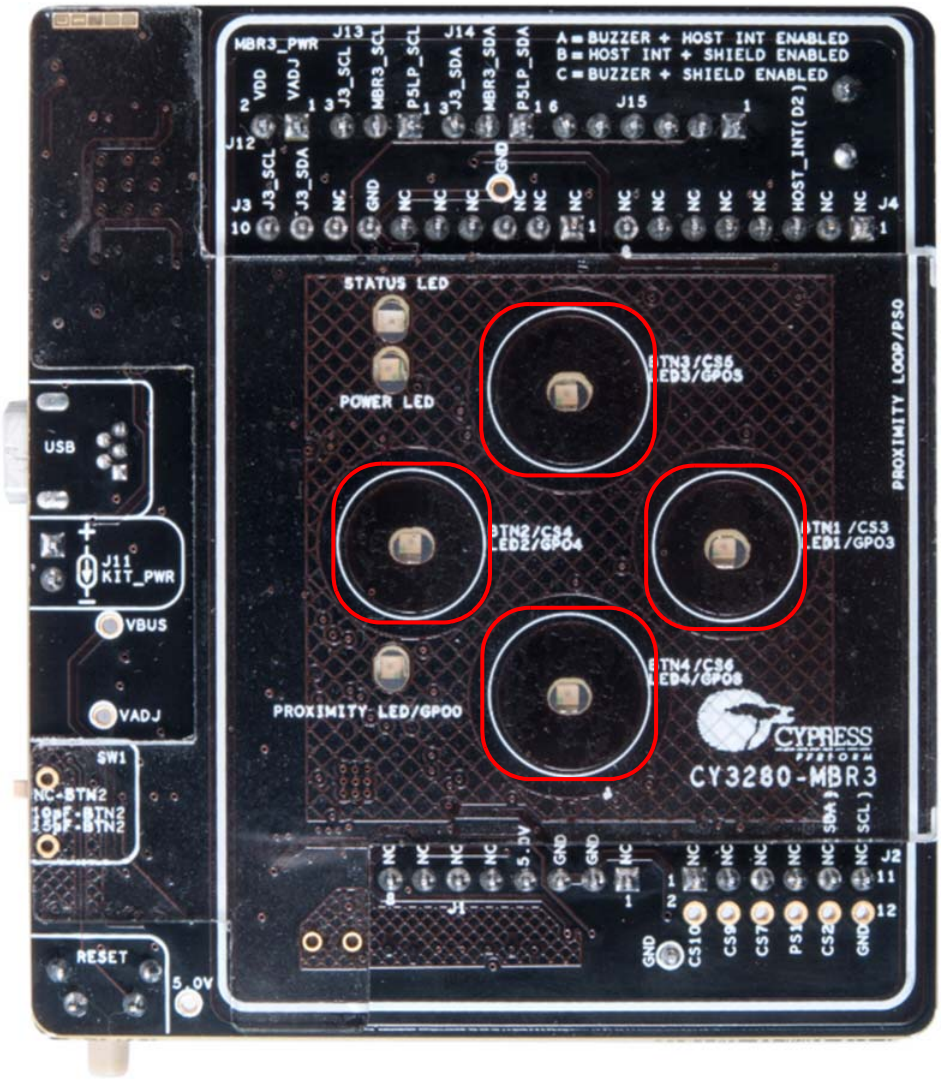

10. Enable the corresponding LEDs in the **Global configuration** tab, as shown in Figure 3-16, to view the LED output for each button touch. Ensure that the GPO logic level is **Active Low** because the LEDs on the CY3280-MBR3 EVK are active low.

    Note: LED1/GPO3, LED2/GPO4, LED3/GPO5, and LED4/GPO6 on the CY3280-MBR3 EVK correspond to LED4, LED5, LED6, and LED7 in the EZ-Click 2.0 customizer tool, which map to the general-purpose output (GPO) pins CS11/GPO3, CS12/GPO4, CS13/GPO5, and CS14/GPO6 respectively on the MBR3 device.

Figure 3-16. Global Configuration Tab

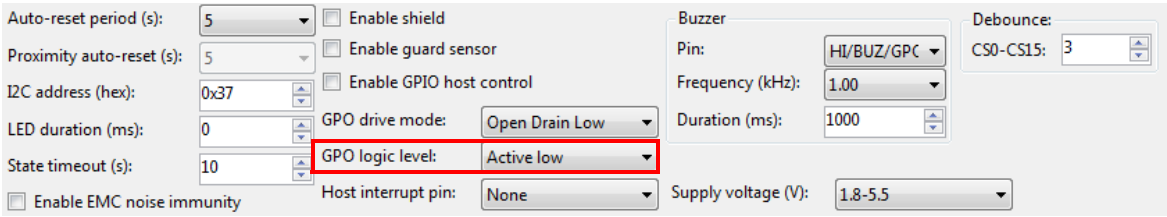

11. The LEDs can also be renamed, as shown in Figure 3-17.

Figure 3-17. Rename LEDs

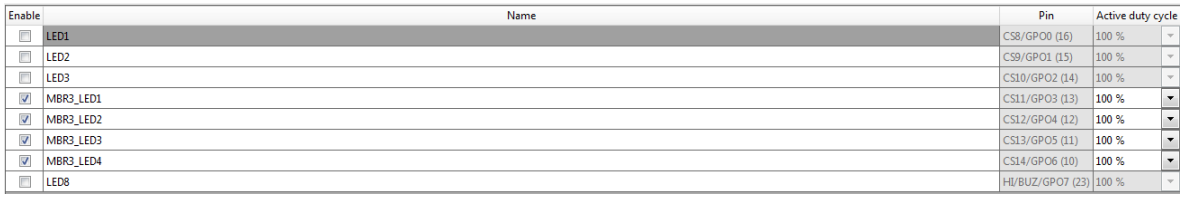

Enable	Name	Pin	Active duty cycle
☐	LED1	CS8/GPO0 (16)	100 %
☐	LED2	CS9/GPO1 (15)	100 %
☐	LED3	CS10/GPO2 (14)	100 %
☑	MBR3_LED1	CS11/GPO3 (13)	100 %
☑	MBR3_LED2	CS12/GPO4 (12)	100 %
☑	MBR3_LED3	CS13/GPO5 (11)	100 %
☑	MBR3_LED4	CS14/GPO6 (10)	100 %
☐	LED8	HI/BUZ/GPO7 (23)	100 %

12. Generate the configuration file by clicking the Generate Configuration File icon on the tool bar or by pressing **[Ctrl] + [G].** The status of configuration file generation is shown in the status bar at the bottom of the EZ-Click window (see Figure 3-18).

Figure 3-18. EZ-Click Status Bar Showing Configuration Generation Status

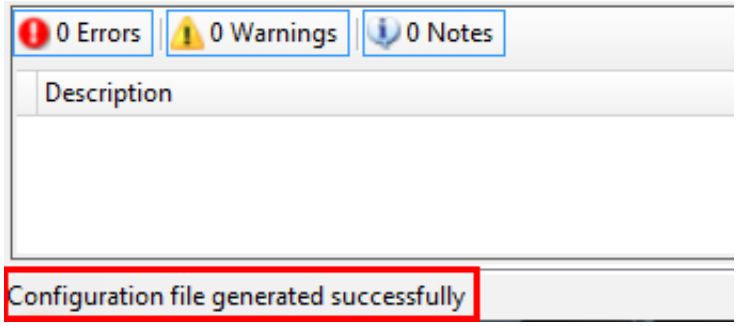

13. Click the Apply Current Configuration icon on the tool bar in the EZ-Click 2.0 customizer tool or press **[Ctrl] + [L]** to download the generated configuration to the MBR3 device.
14. Wait for the message “Device configuration completed successfully” to be displayed on the status bar, as illustrated in Figure 3-19.

Figure 3-19. EZ-Click Status Bar Showing Successful Device Configuration

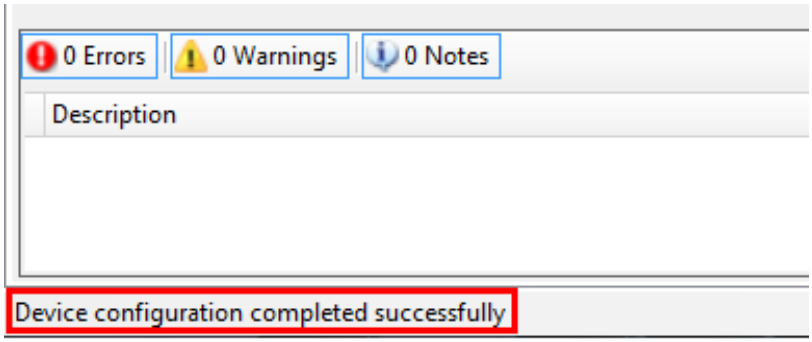

15. Touch the buttons on the kit to observe the features as enabled in the configuration.

Note: The *Water Tolerance* configuration file is preloaded into the kit. The kit supports the features mentioned in Water Tolerance on page 58 by default. To learn more about the configurations, see Configuration Files on page 51.

3.4 Kit Features

The CY3280-MBR3 EVK includes the following features:

- Four CapSense buttons of two different sizes – two buttons of 10-mm diameter (BTN1 and BTN2) and two buttons of 11-mm diameter (BTN3 and BTN4)
- LEDs corresponding to sensors indicating button touch
- A buzzer
- Shield electrode pin for water tolerance
- I^2C selection jumpers
- Arduino-compatible headers
- One proximity loop and a corresponding LED to indicate proximity state (on/off)
- A host interrupt pin
- Two slide switches on two CapSense buttons to vary trace capacitance and demonstrate SmartSense Auto-Tuning

Note: The CS15 pin of the MBR3 device is multiplexed for the CapSense button, host interrupt, and shield electrode. Similarly, GPO7 is multiplexed for general-purpose output, host interrupt, and buzzer output. All three features – host interrupt, buzzer, and shield electrode (water tolerance) cannot be enabled simultaneously. See Buzzer, Shield, and Host Interrupt Multiplexing Jumper on page 44 for more details on CS15 and GPO7 pin connections.

3.4.1 SmartSense Auto-Tuning Feature

The CY8CMBR3116 device features SmartSense Auto-Tuning, which is the Cypress proprietary CapSense algorithm that compensates for system, manufacturing, and environmental changes while providing feature-rich CapSense solutions.

- Reduces design effort by eliminating tedious manual tuning
- Adapts to variations in PCB, overlay, paint, and manufacturing that degrade touch-sensing performance
- Eliminates production-related manual tuning
- Adapts to changes in system environment due to noise sources
- Allows a platform design approach with different overlays, button shapes, and trace lengths

The CY8CMBR3116 also supports setting manual thresholds to override the auto-tuning mechanism, if required.

SmartSense Auto-Tuning is demonstrated using three methods on the kit. See Capacitance Variation Demonstration on page 46 for hardware details:

1. Using the SW1 slide switch to increase capacitance
   a. Power on the kit using USB or an external power supply on pin 4 of the J1 header.
   b. Touch BTN2 on the kit; the corresponding LED will turn on, providing visual feedback on each button touch.
   c. Increase the capacitance of BTN2 by sliding SW1 to add an additional 10-pF or 15-pF external capacitance on the sensor, as shown in Figure 3-20; the LED turns on as if a touch occurred due to the increase in capacitance. Now, press the reset switch, SW2, to reset the board.
   d. Touch BTN2 on the kit; the corresponding LED works normally. This demonstrates the SmartSense Auto-Tuning algorithm, which automatically tunes for the increased CapSense button capacitance.

Note: The SW1 switch has three positions: at the NC-BTN2 position, the button is directly connected to the CS4 pin on MBR3 and no additional capacitance is added. At the 10pF-BTN2 and 15pF-BTN2 positions, an additional trace capacitance of 10 pF and 15 pF respectively are added to the CapSense button.The SW1 switch simulates changes in trace parasitic capacitance.

Figure 3-20. SW1 Slide Switch in NC-BTN2 Position

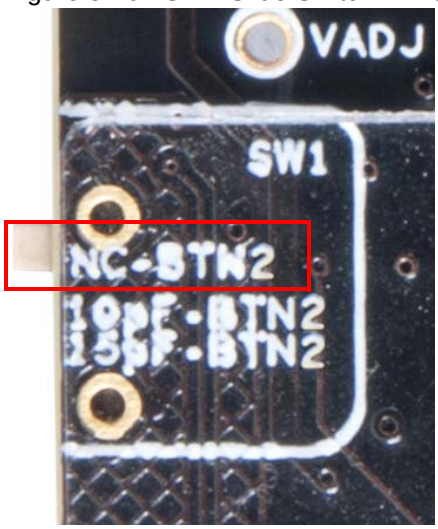

2. Using a short/long trace by adjusting the SW3 slide switch on the kit
   a. Power on the kit using USB or an external power supply on pin 4 of the J1 header.
   b. Touch BTN4 on the kit. The LED corresponding to BTN4 will turn on, providing visual feedback on each touch.
   c. Increase the parasitic capacitance of BTN4 by sliding SW3 (see Figure 3-21) to add a longer trace on BTN4.
   d. The LED turns on as if a touch occurred due to the increase in capacitance. Now, press the reset switch, SW2, to reset the board.
   e. Touch BTN4 on the kit; the corresponding LED works normally and provides visual feedback on each touch. This demonstrates the SmartSense Auto-Tuning algorithm, which automatically tunes for the increase in CapSense button capacitance due to the long trace.

Figure 3-21. SW3 Slide Switch in Long Trace Position

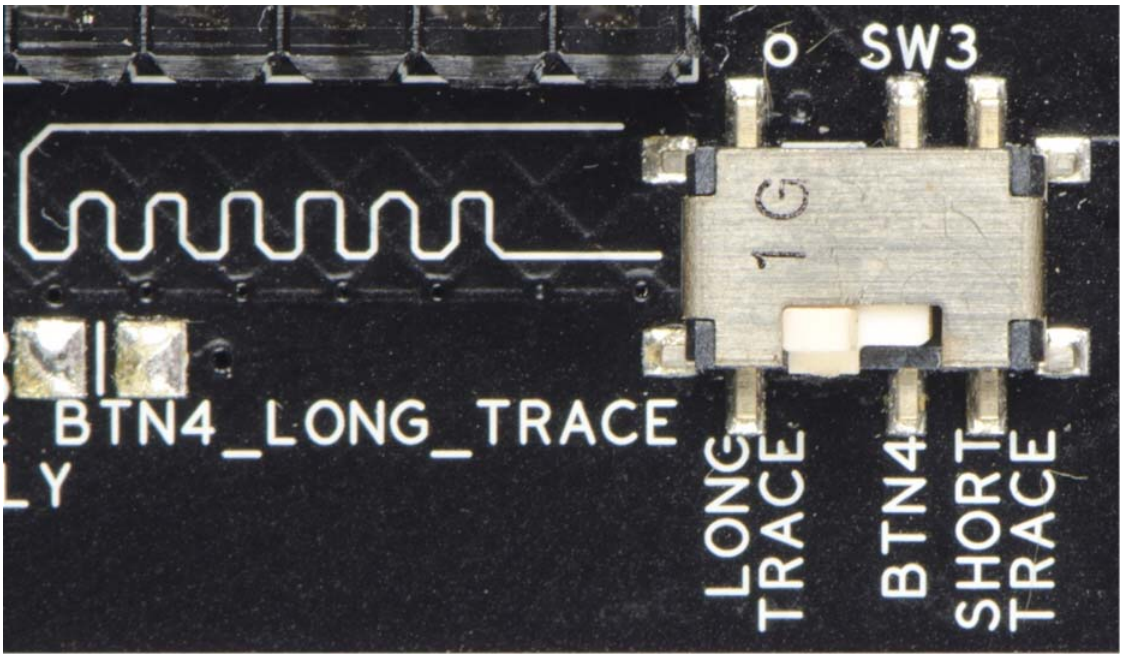

3. Using the additional 1-mm overlay provided with the kit, as shown in Figure 3-22
   a. Power on the kit using USB or an external power supply on pin 4 of the J1 header.
   b. Touch BTN1 on the kit. The LED corresponding to BTN1 will turn on, providing visual feedback on each touch.
   c. Place the additional 1-mm overlay, provided with the kit, on top of the board and press the reset switch, SW2, to reset the board.
   d. Touch BTN1 on the kit; the corresponding LED works normally and provides visual feedback. This demonstrates the SmartSense Auto-Tuning algorithm, which automatically tunes for the increase in CapSense button capacitance due to an increase in overlay thickness.

Figure 3-22. Board with Additional 1-mm Overlay Placed on the 2-mm Overlay

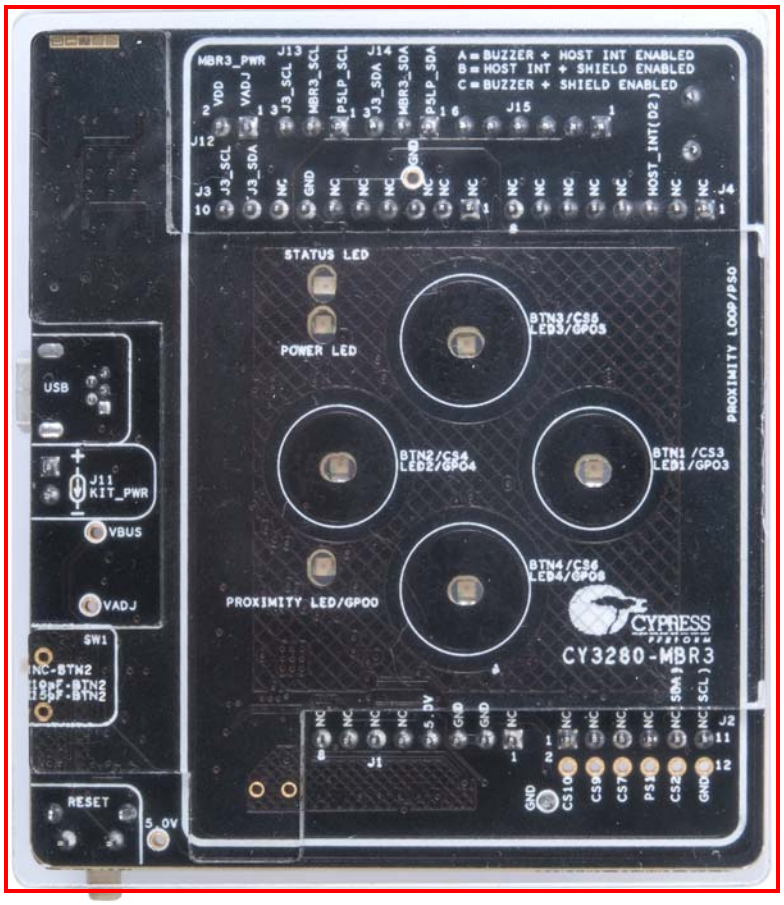

4. Hardware

The CY3280-MBR3 EVK is designed to demonstrate the features of the CY8CMBR3116 register-configurable CapSense controller with four CapSense buttons and a proximity sensor loop. The kit includes five sensor LEDs, which can be used to demonstrate the direct LED control feature of the CY8CMBR3116. It also contains two LEDs to indicate power and kit status. The CY8CMBR3116 controller supports multiple features, which are discussed in Functional Description on page 34.

The CY3280-MBR3 EVK has two communication options:

- A USB interface for the USB-I^2C bridge to communicate with the EZ-Click 2.0 customizer tool.
- The I^2C interface on the kit to connect to an external I^2C host, for example, the PSoC 4 Pioneer Kit (CY8CKIT-042).

4.1 Board Details

The CY3280-MBR3 EVK consists of the following blocks:

- CY8CMBR3116 silicon
- PSoC 5LP USB-I^2C bridge
- Power supply system
- Four button sensors and one proximity loop
- CY3280-MBR3 EVK LEDs: A power, status, and proximity LED and four CapSense LEDs
- Capacitance variation demonstration
  - Two-position slide switch to select long/short trace for BTN4
  - Three-position slide switch to add capacitance on BTN2; the three positions of the slide switch correspond to 10 pF, 15 pF, and no additional capacitance
- Arduino-compatible headers
- Push button to reset the CY8CMBR3116
- Buzzer, shield, and host interrupt pin multiplexing jumper
- I^2C selection jumpers to select between onboard PSoC 5LP and external host.

See Figure 3-1 for the CY3280-MBR3 board details.

4.2 Theory of Operation

This section provides a block-level description of the CY3280-MBR3 EVK.

Figure 4-1. Block Diagram

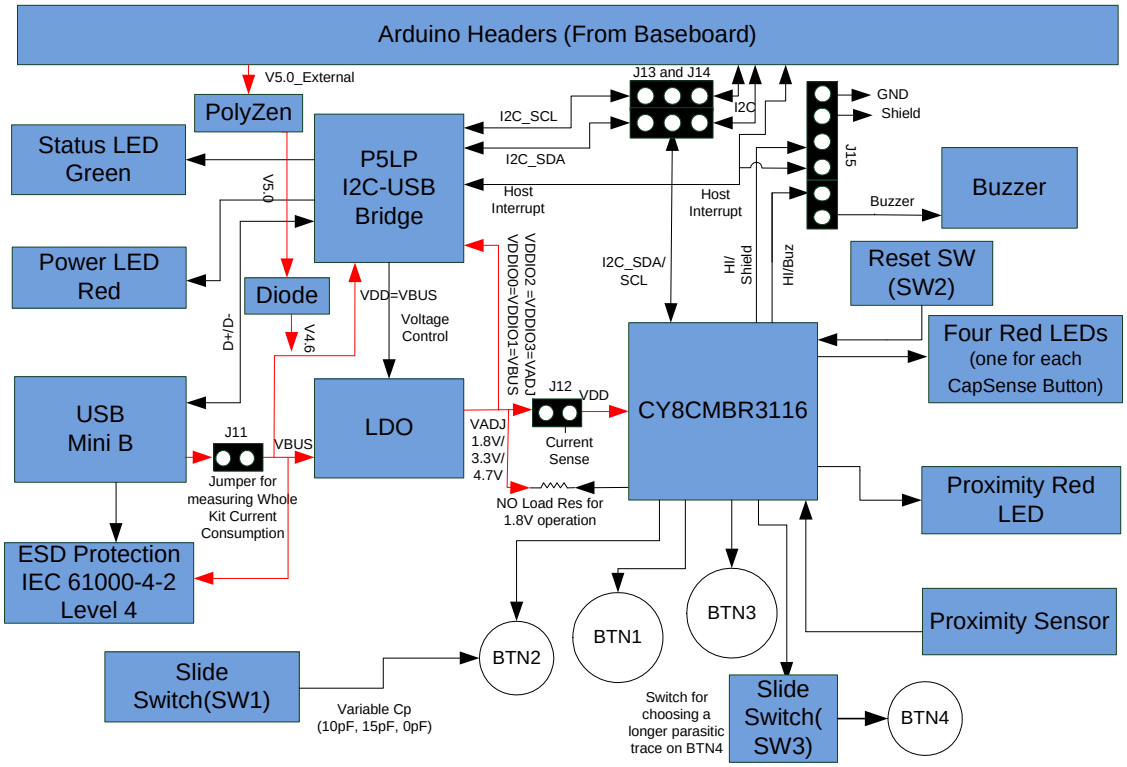

This kit can be powered using the USB Mini-B, the Arduino-compatible header, or an external power supply. You can configure the input voltage (1.8 V, 3.3 V, 5 V, or external supply) while connecting the device to the EZ-Click 2.0 customizer tool. The voltage is controlled by using a low dropout (LDO) regulator, which can provide regulated power of 1.8 V, 3.3 V, and 4.7 V to the CY8CMBR3116 device. The power to the MBR3 device is controlled by the **Power** setting in the EZ-Click customizer tool; see Figure 3-11.

The CY3280-MBR3 EVK includes a status LED, a power LED, LEDs corresponding to all CapSense buttons, and a proximity LED corresponding to the proximity loop on the kit. It contains an onboard PSoC 5LP, which acts as a USB-I^{2}C bridge to support I^{2}C communication using a PC host.

This kit also includes a reset button, which connects to the reset pin (XRES) of the CY8CMBR3116 device. All the unused pins of the device are brought out onto the Arduino header J2 on the kit to enable you to test different types of self-designed sensors and observe the output on the oscillo-scope.

Note: The kit operation voltage is 4.7 V when the kit is configured for 5 V.

4.3 Functional Description

4.3.1 CY8CMBR3116 CapSense Controller

The CY8CMBR3116 CapSense controller includes the following features:

- SmartSense Auto-Tuning – Cypress' CapSense algorithm that continuously compensates for system, manufacturing, and environmental changes.
- Proximity sensing – Supports configurability of sensors for proximity sensing.
- Button sensor auto-reset – Prevents a stuck sensor when a metal object is placed close to that sensor.
- Flanking sensor suppression (FSS) – Eliminates false touches by distinguishing between signals from closely spaced buttons.
- Toggle (touch on/off) – Mimics the mechanical button functionality by toggling sensor output status on every sensor activation.
- LED-on time – Provides better visual feedback by enabling the general-purpose output (GPO) to be on for a configurable period after the button is released.
- Debounce control – Prevents false trigger by specifying the minimum time for which a sensor must be touched for a valid ON status.
- Buzzer signal output – Enables direct drive of a buzzer with configurable frequency.
- Host-controlled GPO – Enables device GPOs to be controlled by the host (I^2C master).
- LED brightness control – Offers duty cycle configurability to control the brightness of the LEDs connected to the GPOs.
- Wake-on approach – Wakes the device from low-power and switches to the active state using proximity sensors.
- Water tolerance – Enables water-tolerant user interface applications. The shield electrode should be enabled through the register map to prevent false touches under wet conditions. To prevent false touches in streaming water conditions, both the shield electrode and guard sensor need to be enabled. However, the MBR3 kit does not have the guard sensor loop. So, water tolerance under streaming water conditions cannot be tested on the board.
- I^2C slave – An I^2C interface with support for 50/100/400-kHz clock speeds and hardware slave address comparison.
- Host interrupt – Alerts the host processor upon touch detection; for every touch and release event, an active low pulse of typically 250 µs is generated.
- System diagnostics – Supports production testing and debugging.

See the CY8CMBR3116 datasheet for more details on these features.

The CY3280-MBR3 EVK can be configured using the EZ-Click 2.0 customizer tool. The kit includes three configuration files with specific features described in Configuration Files on page 51. Additional configurations can be generated and applied to the kit using this tool.

See the *EZ-Click 2.0 Customizer Tool User Guide* for additional details on how to generate more configurations to evaluate the features in this section using the EZ-Click 2.0 customizer tool. This guide is available at the location `<Install Directory>\EZ-Click\<version>\Documentation`.

4.3.1.1 Pin Mapping Between CY8CMBR3116 and CY3280-MBR3 EVK

The CY8CMBR3116 device can be configured for 16 button sensors of which two sensors are configurable as proximity sensors. The kit demonstrates four button sensors and one proximity sensor.

Table 4-1 maps the device pins to the physical sensors on the kit.

Table 4-1. Pin Mapping on the Kit

Sensor	Device	Kit
CS0/PS0	CapSense button/proximity sensor, controls GPO0	Connected to proximity loop on kit
CS1/PS1	CapSense button/proximity sensor, controls GPO1	Routed to Arduino header; can be used for external button/proximity sensor
CS2/Guard	CapSense button/guard sensor, controls GPO2	Routed to Arduino header; can be used for external button/guard sensor
CS3	CapSense button, controls GPO3	Used as button BTN1 on the kit
CS4	CapSense button, controls GPO4	Used as button BTN2 on the kit
CS5	CapSense button, controls GPO5	Used as button BTN3 on the kit
CS6	CapSense button, controls GPO6	Used as button BTN4 on the kit
CS7	CapSense button, controls GPO7	Routed to Arduino header; can be used for external button sensor
CS8/GPO0	CapSense button/general- purpose output	Connected to proximity LED on the kit; driven by CS0/PS0
CS9/GPO1	CapSense button/general- purpose output	Routed to Arduino header; can be used for external button sensor/GPO
CS10/GPO2	CapSense button/general- purpose output	Routed to Arduino header; can be used for external button sensor/GPO
CS11/GPO3	CapSense button/general- purpose output	Connected to LED1 on the kit; driven by CS3 (BTN1)
CS12/GPO4	CapSense button/general- purpose output	Connected to LED2 on the kit; driven by CS4 (BTN2)
CS13/GPO5	CapSense button/general- purpose output	Connected to LED3 on the kit; driven by CS5 (BTN3)
CS14/GPO6	CapSense button/general- purpose output	Connected to LED4 on the kit; driven by CS6 (BTN4)
CS15/SH/HI	CapSense button/shield electrode/host interrupt	Connected to header J15 multiplexing buzzer, shield, and host interrupt pin on the kit
HI/BUZ/GPO7	Host interrupt/buzzer output/general-purpose output	Connected to header J15 multiplexing buzzer, shield, and host interrupt pin on the kit

4.3.2 PSoC 5LP

An onboard PSoC 5LP is used as a USB-I^{2}C bridge for communicating with the PC host. It also sets the operating voltage applied to the target device. The MBR3 device can be operated at either 5.0 V, 3.3 V, and 1.8 V. By default, the onboard PSoC 5LP USB-I^{2}C bridge sets 3.3 V as operating voltage for the MBR3 device. The PSoC 5LP connects to the USB port of the PC through a USB Mini-B connector and to the I^{2}C interface of the CY8CMBR3116 device.

PSoC 5LP is a true system-level solution, providing an MCU, memory, analog, and digital peripheral functions in a single chip. The CY8C58LPxx family offers a modern method of signal acquisition, signal processing, and control with high accuracy, high bandwidth, and high flexibility. Analog capability spans the range from thermocouples (near DC voltages) to ultrasonic signals. For more information, refer to the PSoC 5LP web page and datasheet.

4.3.3 Power Supply System

The CY8CMBR3116 device supports operation from 1.71 V to 5.5 V. The CY8CMBR3116 device has two modes of operation: internally regulated mode and externally regulated mode. Table 4-2 lists the voltage ranges supported for both the operating modes.

Table 4-2. Operating Voltage Ranges for CY8CMBR3116 Device Modes

Operating Voltage Range	Internally Regulated Mode	Externally Regulated Mode
1.71 V to 1.8 V	No	Yes
1.8 V to 1.89 V	Yes	Yes
1.89 V to 5.5 V	Yes	No

Note: See the MBR3 device datasheet for more details.

The power supply system on this board is versatile, allowing the input supply to come from the following sources:

- 5-V power from the onboard USB Mini-B header (J10)
- 5-V power from an Arduino board or an external supply using pin 4 of the J1 header

The power system of this kit is designed to support 1.8-V, 3.3-V, and 4.7-V operation of the CY8CMBR3116 device. At 1.8 V, the kit can be operated in either internally regulated or externally regulated mode. By default, the kit and example projects are designed to operate in internally regulated mode. See Externally Regulated Operation Mode on page 37 to operate the kit in externally regulated mode. The PSoC 5LP firmware configures the required voltage according to the selection made while connecting to the USB-I^{2}C bridge. This configuration is performed by monitoring the Vbus voltage and enabling the LDO regulator (U2–MIC 5219). When the kit is powered externally through the J1 header, the kit operational voltage is regulated to 3.3 V.

When the board is powered using the Arduino header, a PolyZen protection device (U4) is added in series with the 5-V external power line to protect against overvoltage and reverse-voltage scenarios. The device can protect overvoltage and reverse voltage up to 12 V.

Figure 4-2. Power Supply Block Diagram with Protection Circuits

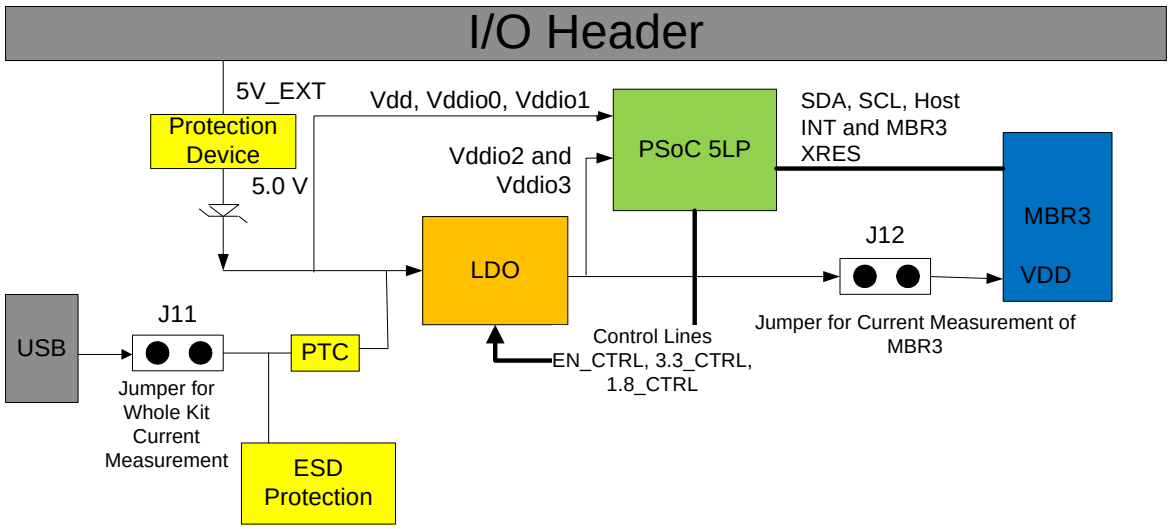

Figure 4-3. Power Supply Section Schematic Snippet

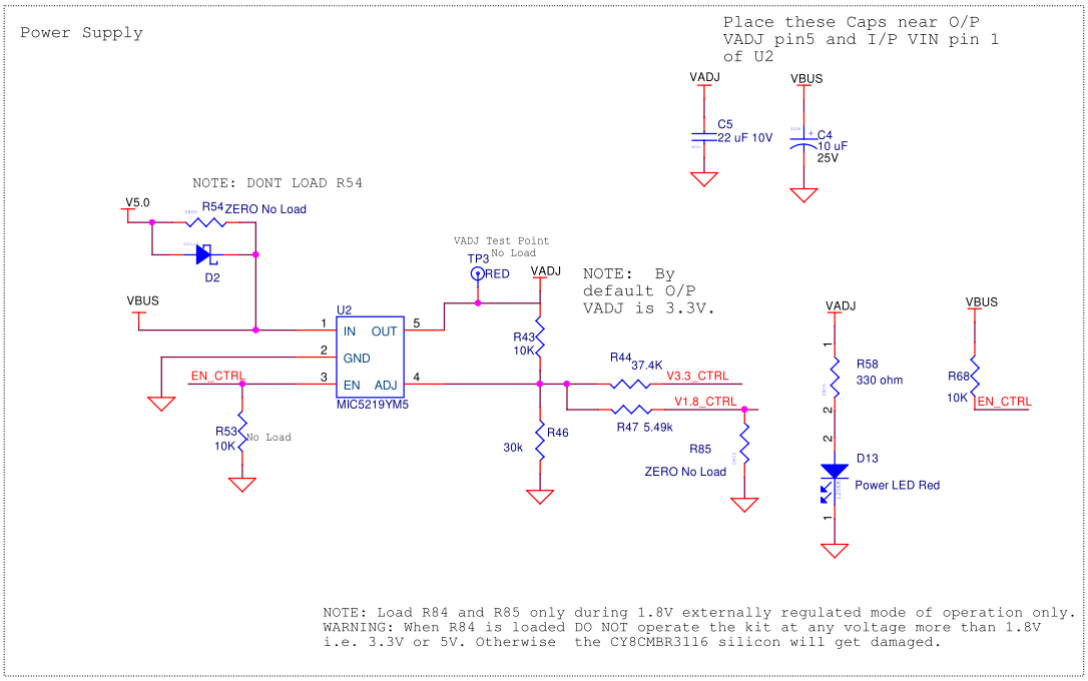

Figure 4-4. Protection from Overvoltage and Reverse Voltage from Arduino Header

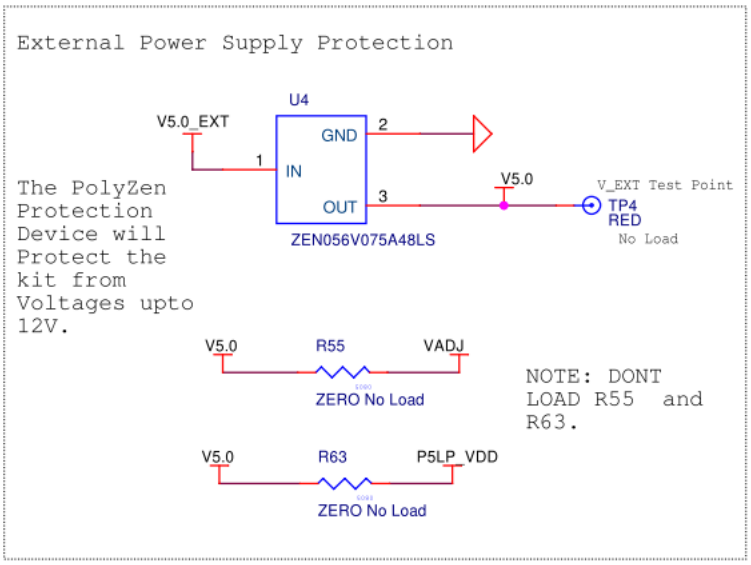

4.3.3.1 *Externally Regulated Operation Mode*

To operate the kit in externally regulated mode at 1.8 V, solder resistors R84 and R85 with 0-ohm resistors. Select the **Supply Voltage (V)** parameter on the EZ-Click customizer tool, as shown in Figure 4-5.

Figure 4-5. Supply Voltage Parameter for Externally Regulated Mode

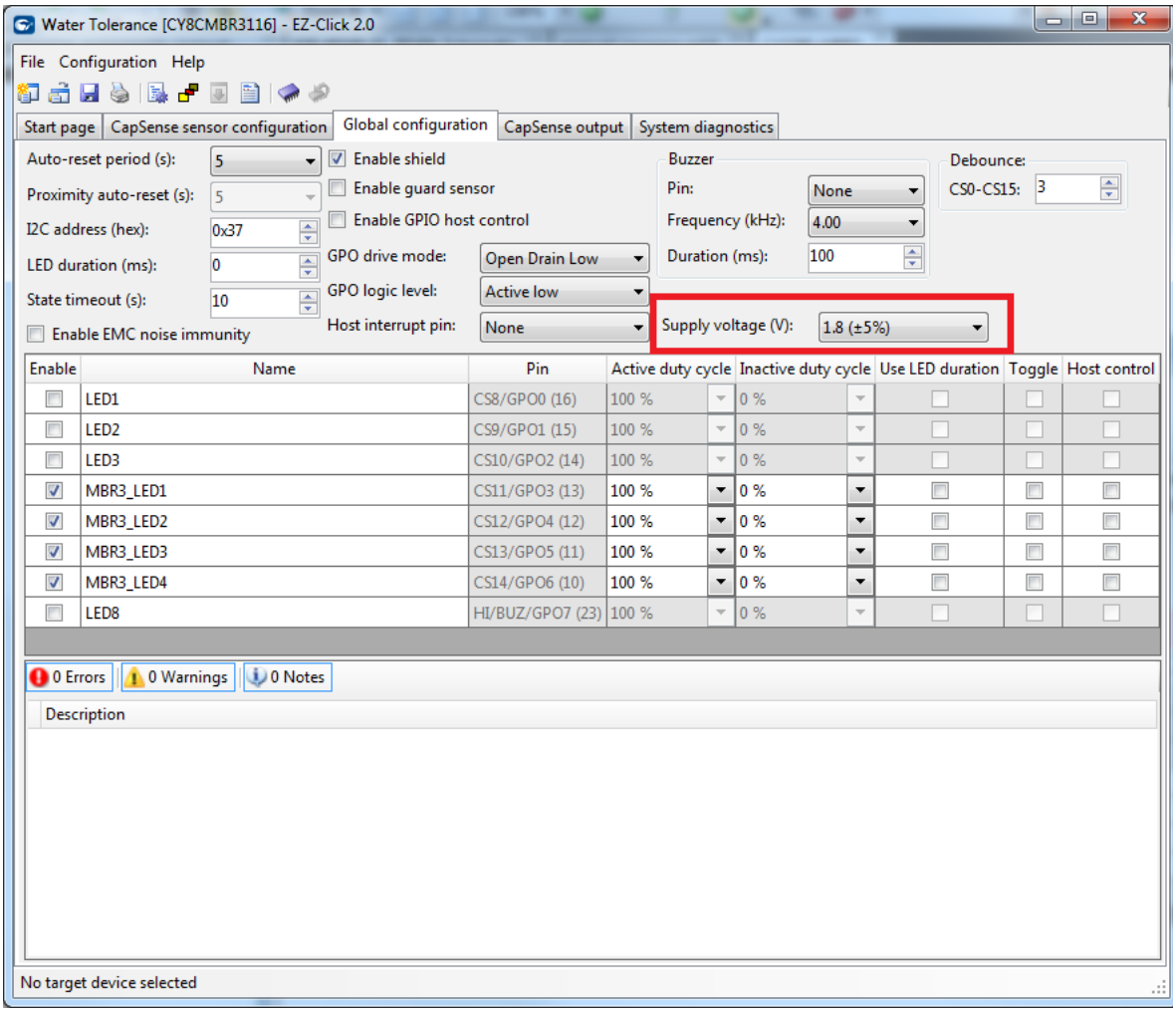

Populating R84 shorts the VCCD and VDD pin of CY8CMBR3116 for the externally regulated mode. Populating R85 ensures that the board is always powered at 1.8 V. This overrides the power settings done from the EZ-Click customizer tool (see Figure 3-11).

Figure 4-6. R84 and R85 for Externally Regulated Operation at 1.8 V

Note: Do not configure the device with the **Supply Voltage (V)** parameter set to 1.8±5%, before populating resistors R84 and R85. If you do so, the EZ-Click customizer tool will throw an error, as shown in Figure 4-7. The kit will not be functional until the resistors R84 and R85 are populated.

Figure 4-7. EZ-Click Error

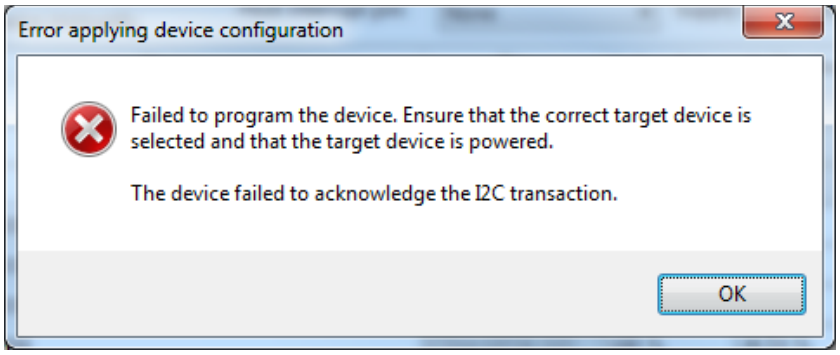

To switch the kit operation from externally regulated mode to internally regulated mode, follow these steps:

1. Select the **Supply Voltage (V)** parameter on the EZ-Click customizer tool, as shown in Figure 4-8 and apply the configuration. This turns the internal regulator on.

   Caution: You cannot apply any configuration if you remove resistors R84 and R85 before step 1.

Figure 4-8. Supply Voltage Parameter

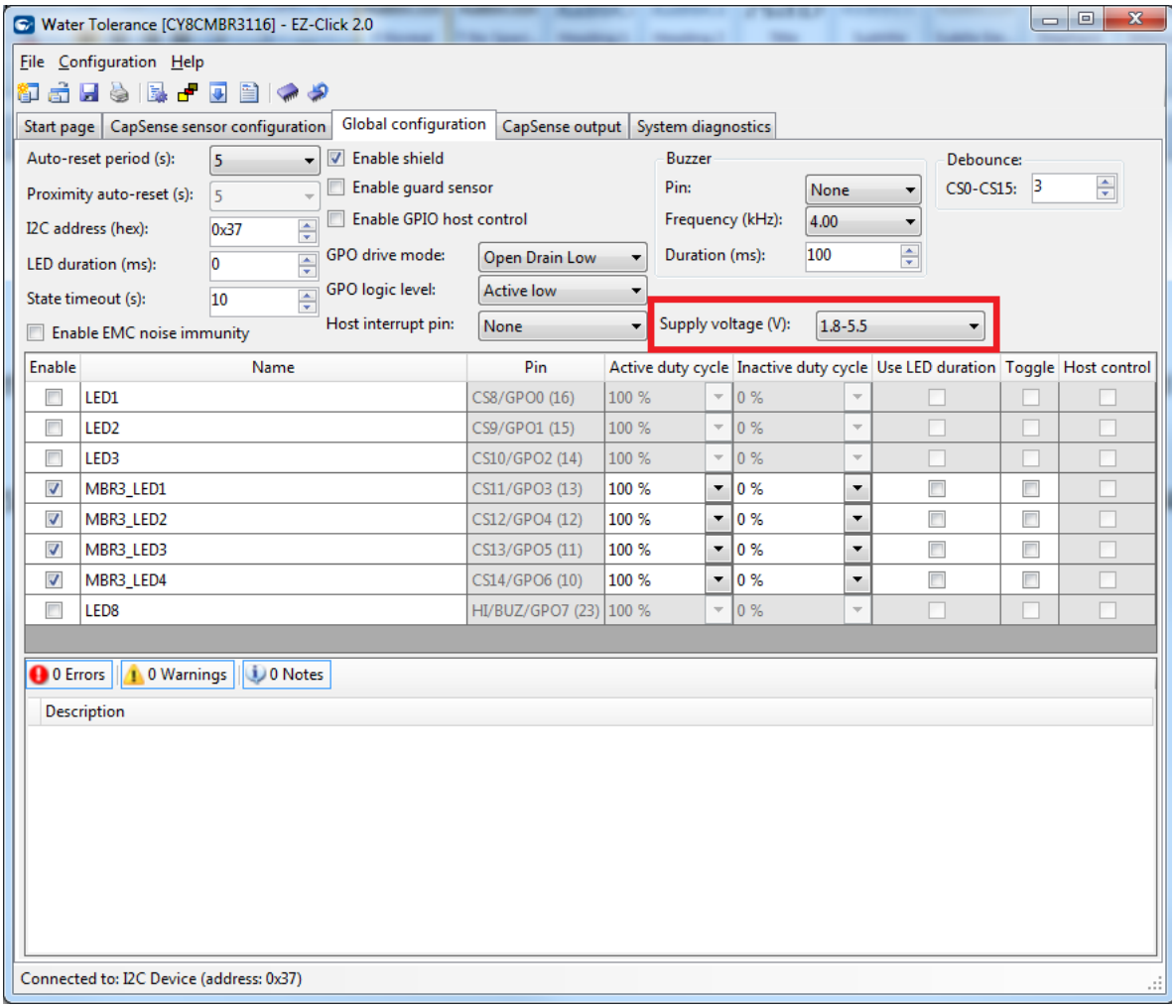

2. Remove the USB cable connected to the kit.
3. Desolder (unpopulate) resistors R84 and R85 (Figure 4-6), which were previously loaded for externally regulated mode operation.
4. Connect the USB cable to the kit and apply the EZ-Click configuration with the Supply Voltage (V) parameter as **1.8-5.5**, as shown in Figure 4-8.

   Note: To operate the kit in internally regulated mode, the **Supply Voltage (V)** parameter should be selected as **1.8-5.5**, as shown in Figure 4-8.

4.3.3.2 Protection Circuit

The power supply rail has reverse-voltage, overvoltage, and short-circuit protection features.

- The PTC resettable fuse is connected to protect the computer's USB ports from overcurrent; see Figure 4-9.

Figure 4-9. USB Power Supply Section Schematic Snippet

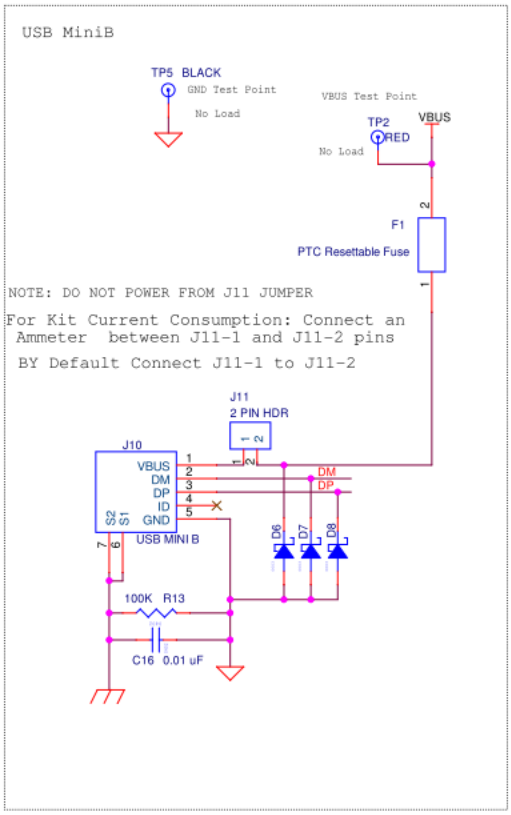

- D2 – A series protection diode to ensure there is no back power to the header; see Figure 4-3.
- U4 – A PolyZen protection device (ZEN056V075A48LS) that protects the kit against overvoltage and reverse voltage from the headers; see Figure 4-4.

Caution: There is no protection on the current measurement jumper, test points, and I/O pins. Do not apply more than 5.5 V on these ports.

4.3.3.3 Procedure to Measure the CY8CMBR3116 Current Consumption

This kit provides a way to measure the current consumption of both the whole kit and the CY8CMBR3116 device individually, without soldering. There are two separate jumpers on the board for this purpose.

1. To measure current consumption of only the CY8CMBR3116 device, remove the power supply by either disconnecting the USB cable or removing the power source at pin 4 of the J1 header and connect an ammeter across J12. Now, power the kit again by either connecting the USB cable or supplying power at pin 4 of the J1 header.

Figure 4-10. CY8CMBR3116 Device Current Consumption Measurement

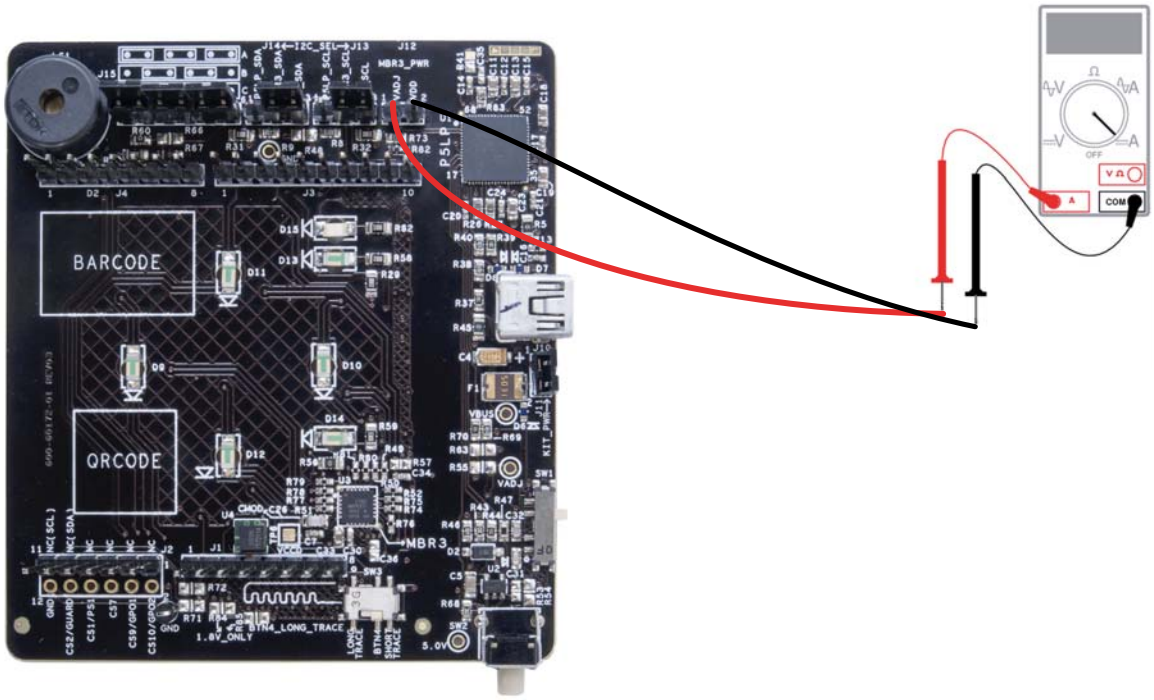

2. To measure the current consumption of the whole kit, remove board power and connect an ammeter across J11. Now, power the kit again by connecting the USB cable.

Figure 4-11. Kit Current Consumption Measurement

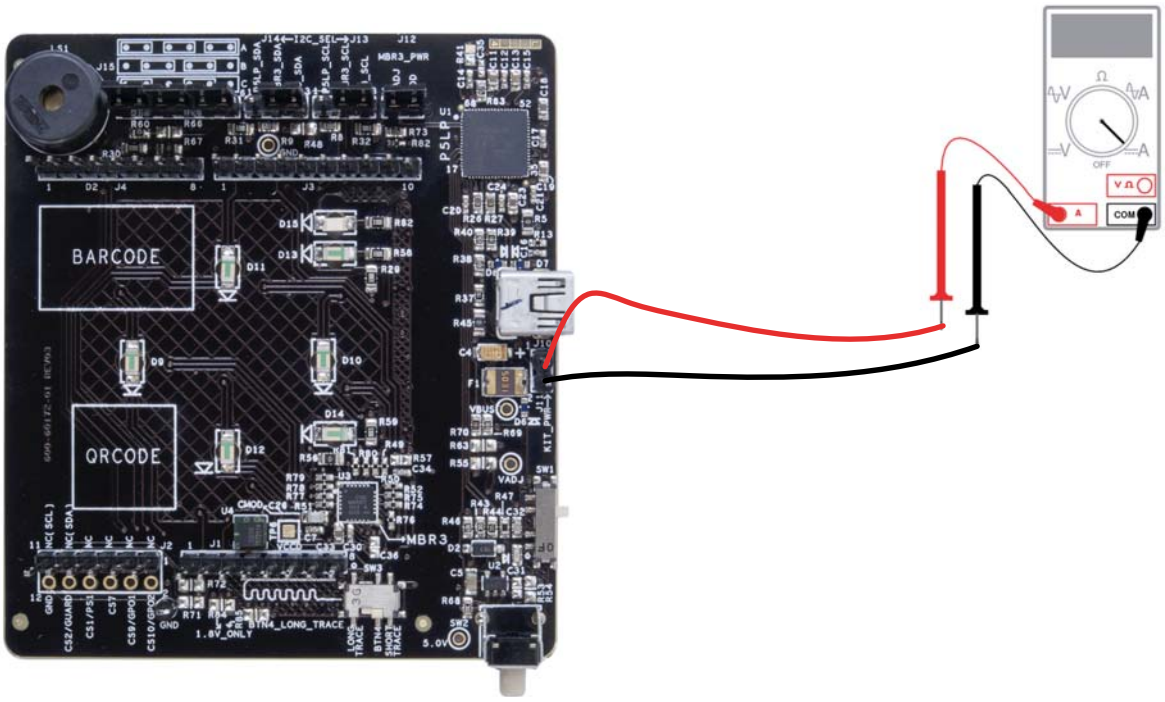

Note: Do not remove the current measurement jumper J12 while the kit is powered. This can damage the MBR3 silicon.

4.3.4 Button Sensors and Proximity Loop Sensor

The kit has four CapSense buttons (two circular buttons of 10-mm diameter and two circular buttons of 11-mm diameter) and one proximity loop onboard, as Figure 4-12 shows. These sensors can be driven by the CY8CMBR3116 device to perform touch and proximity detection.

Figure 4-12. Button Sensor and Proximity Loop Connections on the Kit

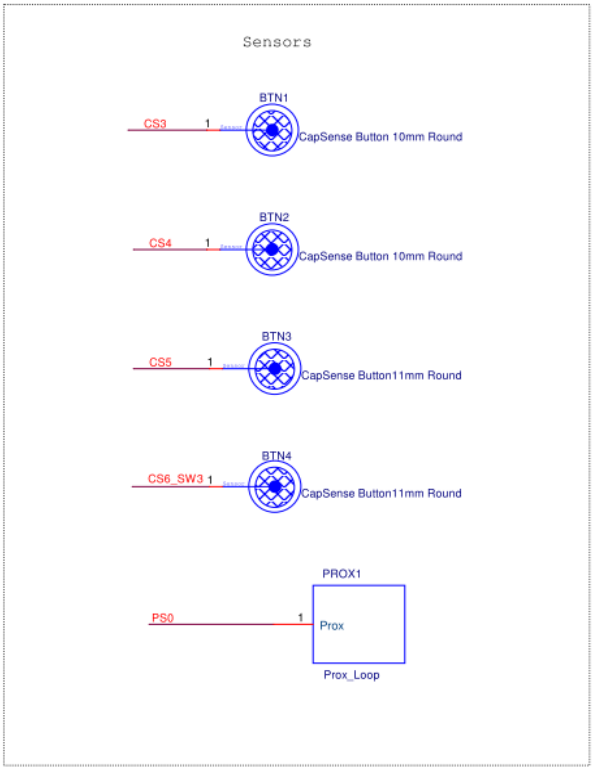

4.3.5 CY3280-MBR3 Kit LEDs

The EVK has seven onboard LEDs. A green LED (D15) indicates the status of the USB-I^{2}C bridge. A red LED (D13) indicates the status of the power supplied to the board.

The kit also has an active-low red LED for each CapSense button and proximity loop. The CY8CMBR3116 drives these LEDs by driving the GPO low.

Figure 4-13 and Figure 4-14 detail the schematic of the LEDs.

Note: These LEDs are dim when working at 1.8 V compared to 3.3-V and 4.7-V operation.

Figure 4-13. Power and Status LED Connection

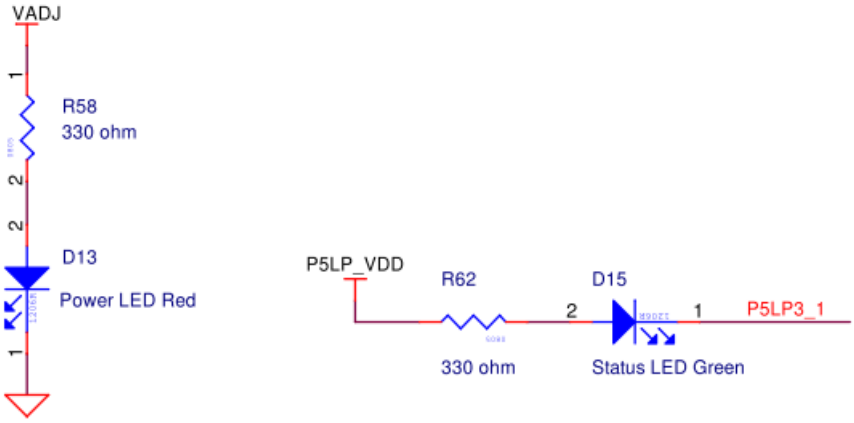

Figure 4-14. Sensor Indicator LEDs

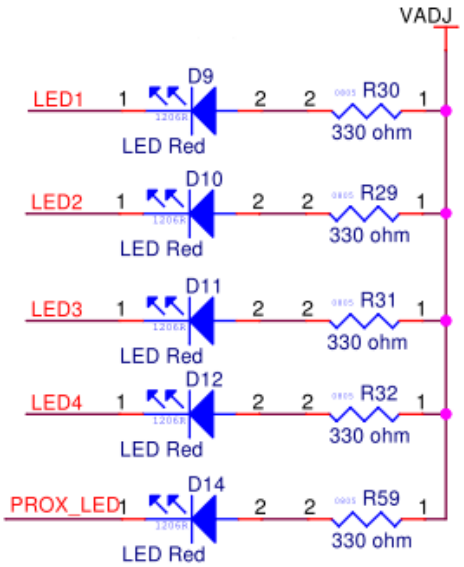

Note: The sensor indicator LEDs are connected to the adjustable voltage, VADJ, which is the output of the LDO regulator (U2-MIC 5219). The anode of all the LEDs is connected to VADJ, which is high. Therefore, these are all active-low LEDs.

4.3.6 Buzzer, Shield, and Host Interrupt Multiplexing Jumper

The CS15 pin of the MBR3 device is multiplexed for the CapSense button, host interrupt, and shield electrode. Similarly, GPO7 is multiplexed for general-purpose output, host interrupt, and buzzer output. All three features – host interrupt, buzzer, and shield electrode (water tolerance) cannot be enabled simultaneously. These features can be enabled using the multiplexing jumper J15, which has three combinations.

Table 4-3. J15 Combinations

Combination	Features
A	Buzzer on GPO7, Host Interrupt on CS15
B	Host Interrupt on GPO7, Shield on CS15
C	Buzzer on GPO7, Shield on CS15

Note: If water tolerance (shield) is not used and only buzzer or host interrupt features are used, then the shield pin must be connected to ground by shorting pins 5 and 6 of jumper J15.

See the MBR3 device datasheet and the schematic for more details.

Figure 4-15. Buzzer, Shield, and Host Interrupt Connection

AT ANY TIME DONT LOAD BOTH R66 and R67.

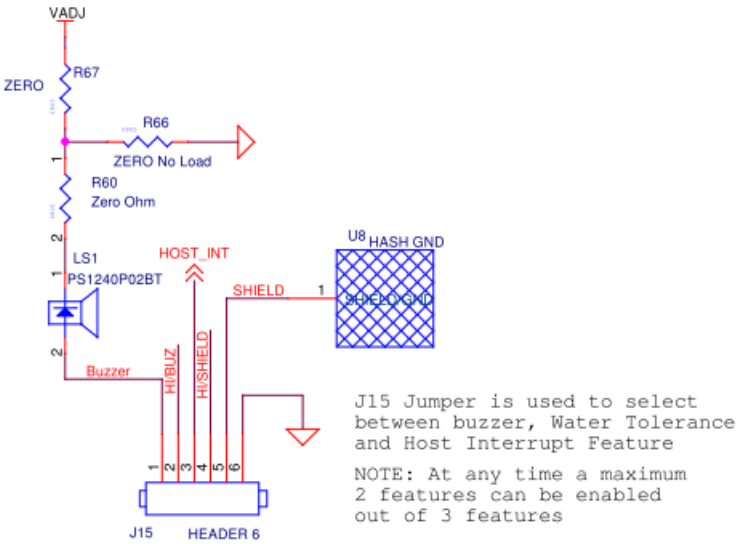

Setting	J15 Jumper Connection	Enabled Features (2 features at a time)
A	Connect J15-1 to J15-2 , J15-3 to J15-4 and J15-5 to J15-6 using 3 shunts	Buzzer Enabled, Host Interrupt Enabled and Water Tolerance is Disabled.
B	Connect J15-2 and J15-3, J15-4 to J15-5 using 2 shunts	Buzzer Disabled, Host Interrupt Enabled and Water Tolerance is Enabled
C	By Default connect J15-1 and J15-2, J15-4 to J15-5 using 2 shunts	Buzzer Enabled, Host Interrupt Disabled and Water Tolerance is Enabled

Figure 4-16. Default J15

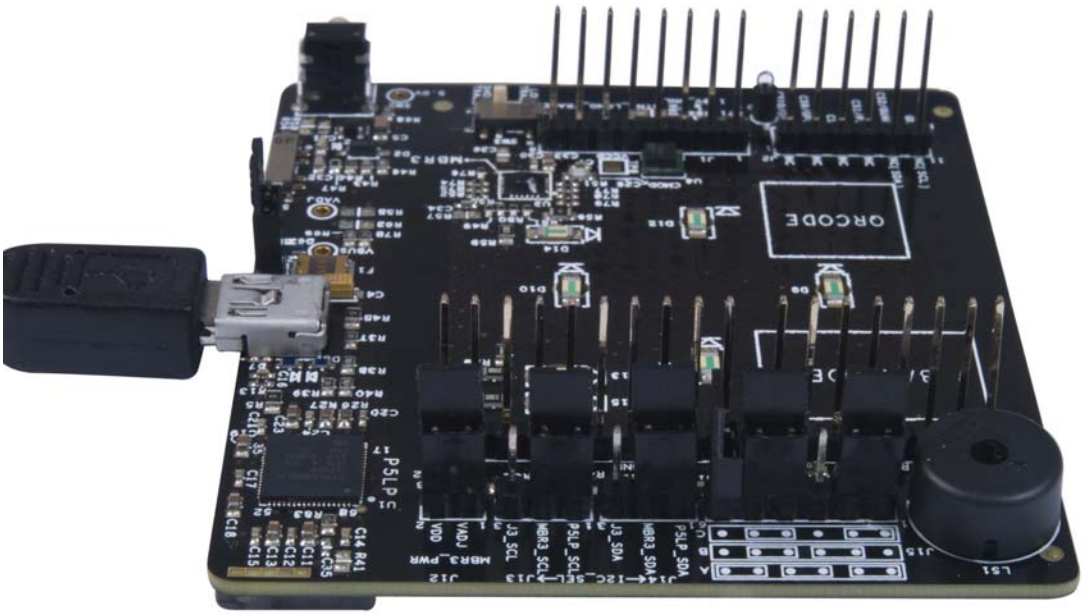

Note: The kit is shipped with the combination/setting 'C' and the third jumper is connected vertically so that it is not shorted to any other pin.

4.3.7 Capacitance Variation Demonstration

The kit provides three methods to demonstrate parasitic capacitance variation on the button sensors available on the kit, as shown in Figure 4-17. These methods are used to showcase the SmartSense auto-tuning capability of the device. See SmartSense Auto-Tuning Feature on page 28 to learn the procedure to test these methods using this kit.

The methods are:

- Using the trace method: Button BTN4 (connected to the CS6 pin of CY8CMBR3116) is connected to the SW3 slide switch, which can be used to provide two different routes between the pin and the sensor pad. One route is longer than the other. Different trace lengths have different parasitic capacitance; therefore, you can change the length of the trace to change the parasitic capacitance on the sensor.
- Using external capacitance: The SW1 switch is provided to add an extra capacitance of 10 pF or 15 pF on BTN2 (connected to the CS4 pin of the CY8CMBR3116).
- Using an additional 1-mm overlay: An additional overlay of 1 mm is provided with this kit. You can place this overlay over the sensors to change the parasitic capacitance.

Figure 4-17. Parasitic Capacitance Configuration

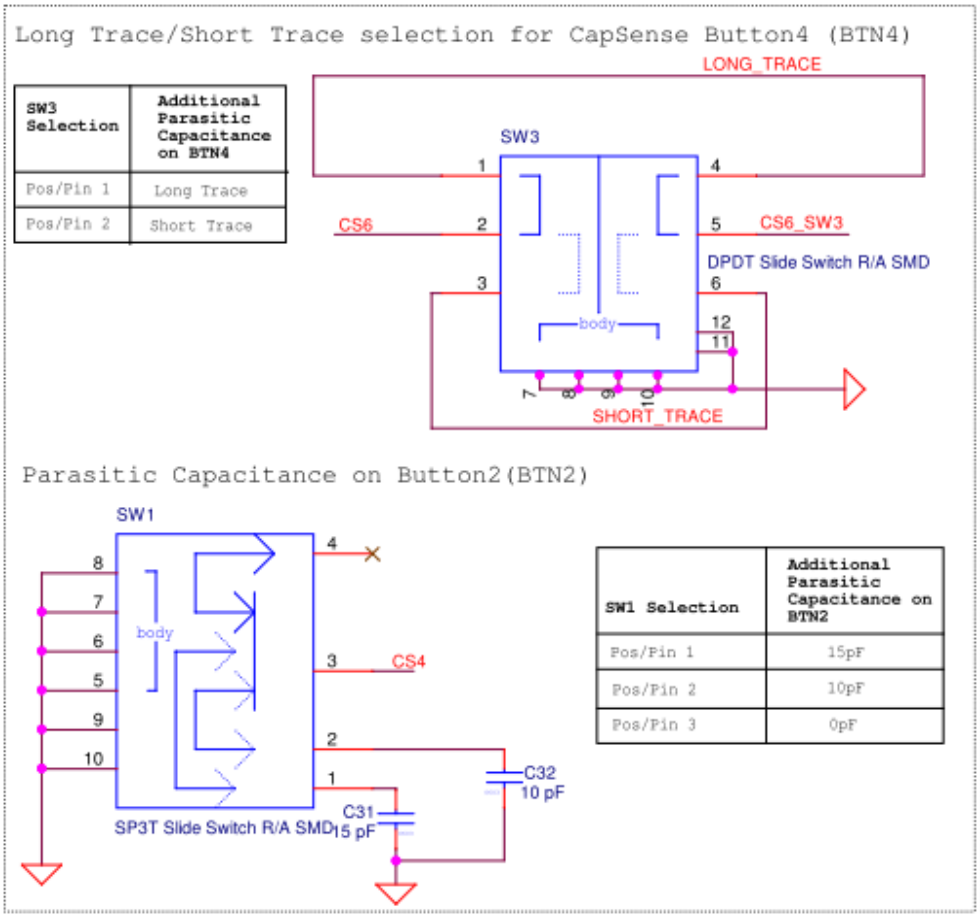

4.3.8 Arduino-Compatible Headers

The I/O headers J1–J4 comply with the Arduino UNO (R3) kit to support Arduino base boards. The Arduino-defined signals include digital/analog signals from the CY8CMBR3116; system power signals are brought to the outer rows of headers J1–J4.

Pin maps of the Arduino-compatible headers J1–J4 are shown in the following tables. The pins connected between the Arduino board and the CY3280-MBR3 EVK appear in red. The pins shown in blue are on the second row of the J2 connector; these are the unused pins of the CY8CMBR3116 device.

This kit also provides additional I^2C lines on pins J2.9 (SDA) and J2.11 (SCL). These pins are used by older Arduino boards, such as the Arduino UNO R2 and Arduino Mega boards. These lines are not connected (NC) by default and can be used by loading a 0-Ω resistor on R71 and R72 and removing both jumpers from headers J13 and J14.

Table 4-4. J1 Arduino Header or Power Connector

Power Connector (J1)		
Pin	**Arduino Board Signal**	**CY3280-MBR3 EVK Signal**
J1.1	VIN	NC
J1.2	GND	GND
J1.3	GND	GND
J1.4	V5.0	V5.0
J1.5	V3.3	NC
J1.6	RESET	NC
J1.7	IOREF	NC
J1.8	NC	NC

Table 4-5. J2 Arduino Header

J2 Connector		
Pin	**Arduino Board Signal**	**CY3280-MBR3 EVK Signal**
J2[1,3,5,7,]	A0 – A3	NC
J2.9	A4	SDA (Default – NC)
J2.11	A5	SCL (Default – NC)
J2.2	NC	CS10
J2.4	NC	CS9
J2.6	NC	CS7
J2.8	NC	PS1
J2.10	NC	CS2/GAURD
J2.12	NC	GND

Table 4-6. J3 Arduino Header

J3 Connector		
Pin	**Arduino Board Signal**	**CY3280-MBR3 EVK Signal**
J3.1	D8	NC
J3.2	D9	NC
J3.3	D10	NC
J3.4	D11	NC
J3.5	D12	NC
J3.6	D13	NC
J3.7	GND	GND
J3.8	AREF	NC
J3.9	SDA	J3_SDA
J3.10	SCL	J3_SCL

Table 4-7. J4 Arduino Header

J4 Connector		
Pin	**Arduino Board Signal**	**CY3280-MBR3 EVK Signal**
J4.1	D0	NC
J4.2	D1	NC
J4.3	D2	Host Interrupt
J4.4	D3	NC
J4.5	D4	NC
J4.6	D5	NC
J4.7	D6	NC
J4.8	D7	NC

Figure 4-18. Arduino Connectors Schematic Snippet

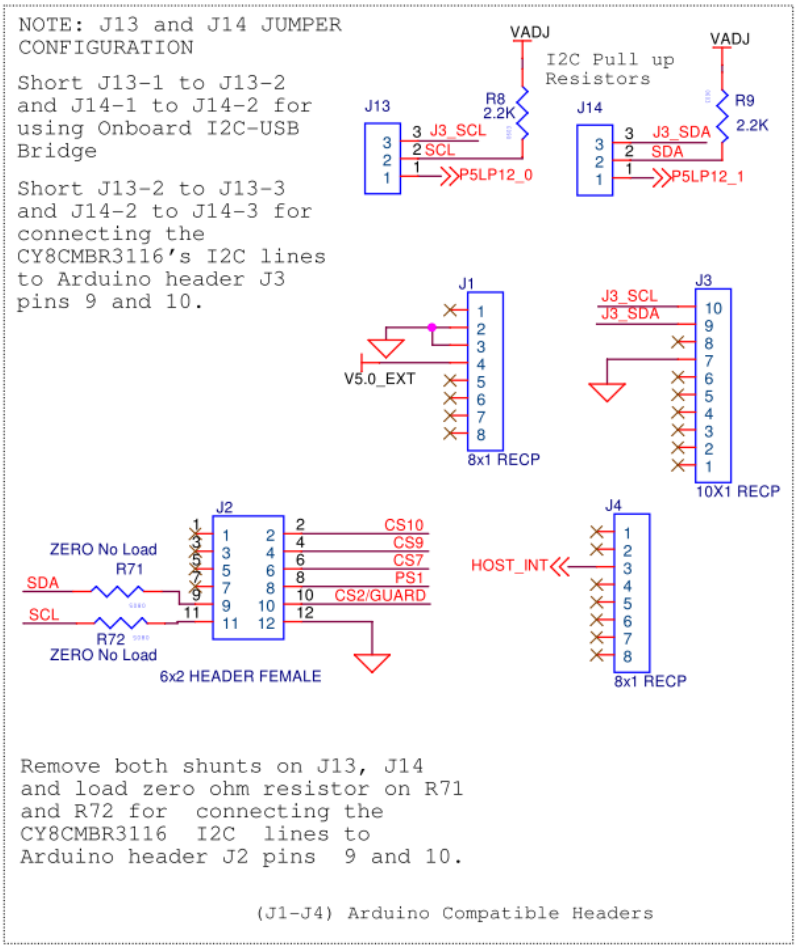

4.3.9 Push Button to Reset CY8CMBR3116

The kit contains a mechanical reset push button, SW2, to reset the CY8CMBR3116 device, as shown in Figure 4-19.

Figure 4-19. Push Button Reset Switch

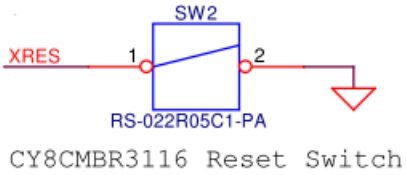

4.3.10 I^{2}C Selection Jumpers

The I^{2}C communication lines (SCL and SDA) can be connected to either the onboard USB-I^{2}C bridge (PSoC 5LP) or to the I^{2}C pin location on the Arduino header (J3.9 and J3.10). See Figure 4-18 for the schematic snippet.

5. Configuration Files and Example Projects

This section documents the high-level design process to open, configure, generate, and apply configuration files to the CY3280-MBR3 EVK using the EZ-Click 2.0 customizer tool. This kit provides three sample configurations. Each sample configuration file has different configuration settings, demonstrating various kit and device features. By default, the kit is configured with the *Water Tolerance* sample configuration.

Table 5-1. Features in Configuration Files

Configuration	Features
LED Toggle	Four CapSense buttons, four LEDs, buzzer, and LED toggle
Proximity Detection	Four CapSense buttons, four LEDs, proximity loop, proximity LED, buzzer, and LED brightness
Water Tolerance	Four CapSense buttons, four LEDs, water tolerance, flanking sensor suspension (FSS), auto-reset

To use the sample configuration files, you need the EZ-Click 2.0 customizer tool, which is installed along with the kit.

5.1 Running Configuration Files and Host Projects

The EZ-Click configuration files and PSoC 4 host projects require administrator privileges if they are run directly from the default install location (`C:\Program Files\Cypress`). If you do not have administrator privileges, copy the `Firmware` folder from the default install location to any other location on your PC and use the files.

5.2 Configuration Files

Follow these steps to run the configuration files and verify the features. Before running any of the configuration files, short pins 1 and 2 on J13 and J14. This is required to short the I^2C communication lines (SCL and SDA) of the MBR3 device to the PSoC 5LP I^2C lines.

The jumper J15 should be in setting C, as shown in Figure 5-1.

Figure 5-1. Jumpers J13, J14, and J15 Settings

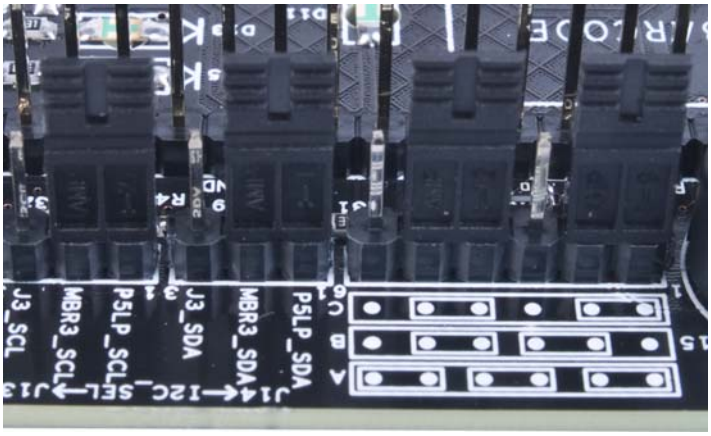

5.2.1 LED Toggle

This configuration file configures the CY8CMBR3116 for demonstrating the LED toggle (touch on/off) and buzzer drive features for all four available button sensors.

5.2.1.1 Loading LED Toggle Configuration

1. Connect the CY3280-MBR3 EVK to the PC via the USB port using the USB cable. Ensure that the status and power LEDs glow.
2. Open the EZ-Click 2.0 customizer tool from the default location: **Start** > **All Programs** > **Cypress** > **EZ-Click 2.0** > **EZ-Click 2.0**.
3. Click **Open Project** in the **File** menu. Figure 5-2 shows the default location of the **Load Project** action.

Figure 5-2. Load Project

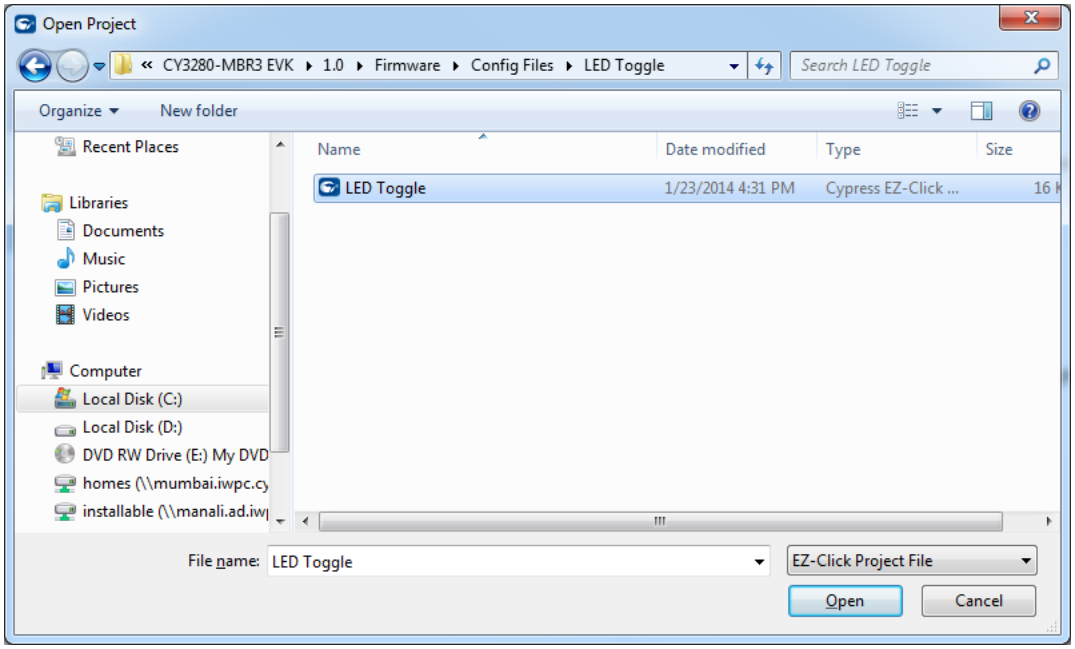

4. Navigate to the project directory in the **Open Project** window.
5. Double-click the *LED Toggle.cprj* file to open it.

6. Ensure that the I^{2}C selection jumpers J13 and J14 are shorted between pins 1 and 2 to allow communication with the PSoC 5LP onboard USB-I^{2}C bridge.
7. Connect the kit to the EZ-Click 2.0 customizer tool using the following steps.
   a. Click the **Select Target Device** button ( ) on the tool bar of EZ-Click 2.0.
   b. Select **3.3 V** as target power and **400 kHz** as I^{2}C speed; click **OK** to connect to the CY3280-MBR3 EVK, which has the slave address of 0x37.

Figure 5-3. Connecting the Kit with the Customizer

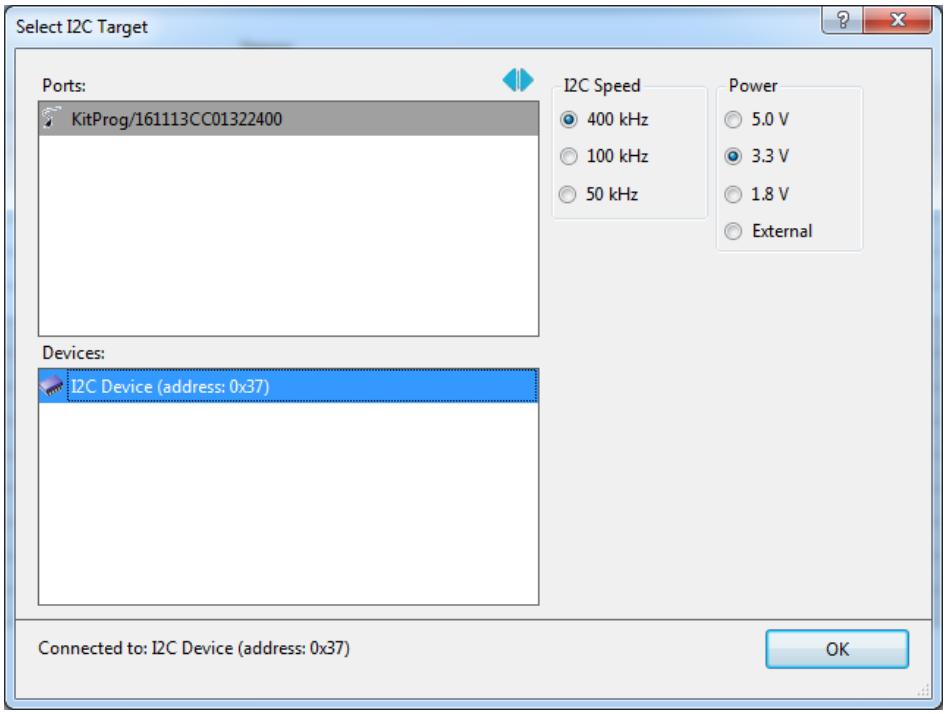

8. Select **Apply Current Config** in the **Configuration** menu to apply the configuration to the kit, as illustrated in Figure 5-4.

Figure 5-4. Apply Current Configuration

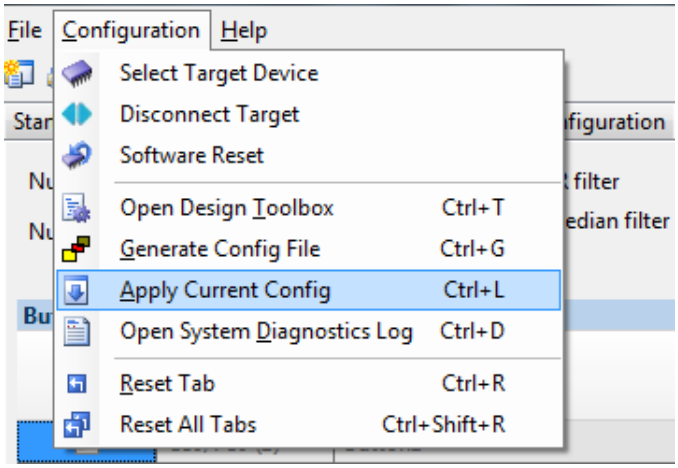

9. Wait until the message “Device configuration completed successfully” appears on the status bar at the bottom of the EZ-Click window, as displayed in Figure 5-5.

Figure 5-5. Successful Configuration Status Message

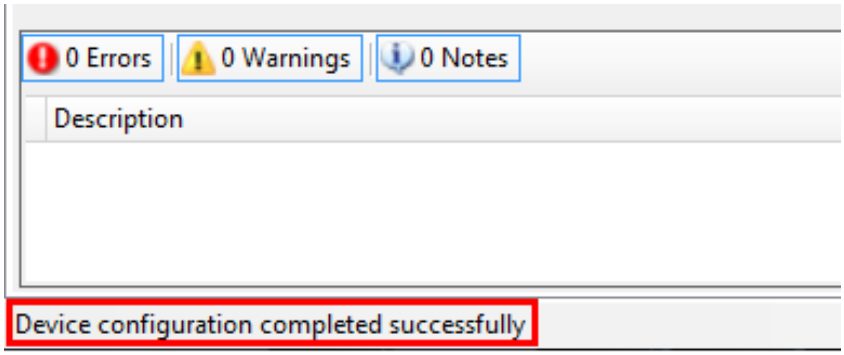

10. Verify the following features:
    a. Toggle (touch on/off) feature: Touch any CapSense button; the respective LED toggles its status.
    b. Buzzer feature (frequency of 4 kHz and duration of 100 msecs): Touch any CapSense button; the respective LED toggles along with an audio feedback for 100 msecs at a 4-kHz frequency.

Figure 5-6. Verify LED Toggle Feature

5.2.2 Proximity Detection

This configuration file configures the CY8CMBR3116 to demonstrate proximity detection, CapSense buttons, LED brightness, and buzzer drive features.

5.2.2.1 Loading Proximity Detection Configuration

1. Follow steps 1 to 4 as described in section 5.2.1.1 Loading LED Toggle Configuration.
2. Double-click the *Proximity Detection.cprj* file to open it.
3. Follow steps 6 to 9 as described in section 5.2.1.1 Loading LED Toggle Configuration to continue.
4. Verify the following features:
   a. CapSense buttons: Touch any CapSense button; the corresponding LED turns on, detecting your touch.
   b. LED brightness feature (93 percent Active duty cycle and 7 percent Inactive duty cycle): The LEDs are driven by a pulse width modulator (PWM); the percentage of active and inactive duty cycles represent the PWM duty cycle for which the LEDs will be on. According to the configuration settings, when none of the CapSense buttons are touched, the LEDs glow with a faint brightness with a PWM duty cycle of 7 percent. When a CapSense button is touched, the LED glows with higher brightness, with a PWM duty cycle of 93 percent.
   c. Buzzer feature (1-kHz frequency and 1-second duration): Touch a CapSense button or proximity loop; the respective LED turns on along with an audio feedback for 1 second at a 1-kHz frequency.

Figure 5-7. LEDs with 7 Percent Inactive Duty Cycle

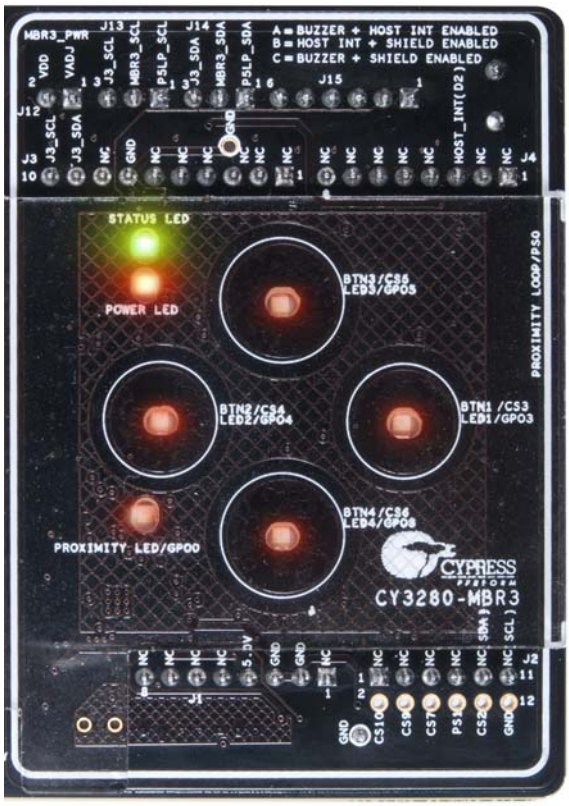

Figure 5-8. LEDs with 93 Percent Brightness on Button Touch

d. Proximity: Hover your hand/finger (3-cm distance) over the kit; the proximity LED lights up, showcasing proximity detection.

The proximity sensor has three states: OFF, Proximity, and ON (or Touch). The buzzer is enabled when the Proximity state becomes ON – when the proximity loop is touched. The change in Proximity state can be seen in the System Diagnostics tab in EZ-Click. In the **System Diagnostics** tab, select **Sensor1** from the drop-down list and click **Start** to monitor the sensor status and SNR for the selected CapSense sensor.

Figure 5-9. Selecting Proximity Sensor in System Diagnostics

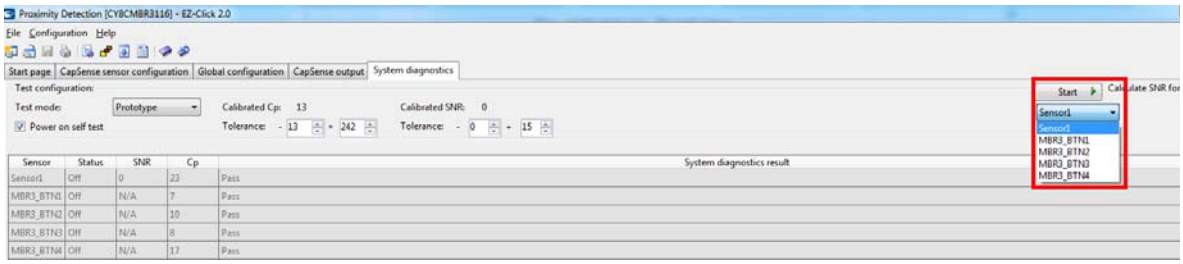

Figure 5-10. Proximity Sensor in Off State

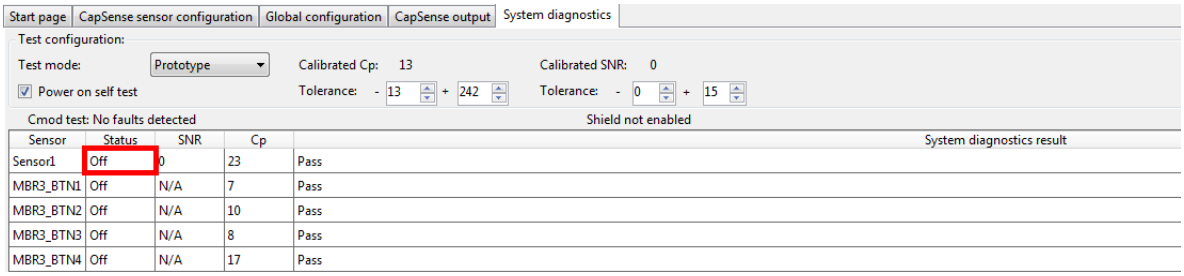

Figure 5-11. Proximity Sensor in Proximity State

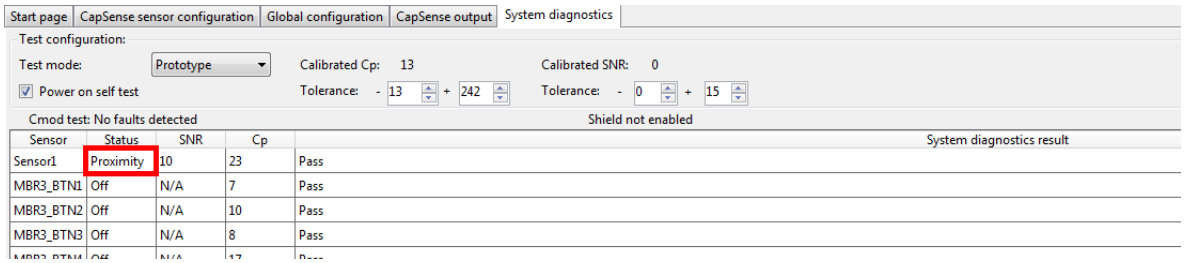

Note: In the Proximity state, the LED brightness increases.

Figure 5-12. Proximity Sensor in ON State

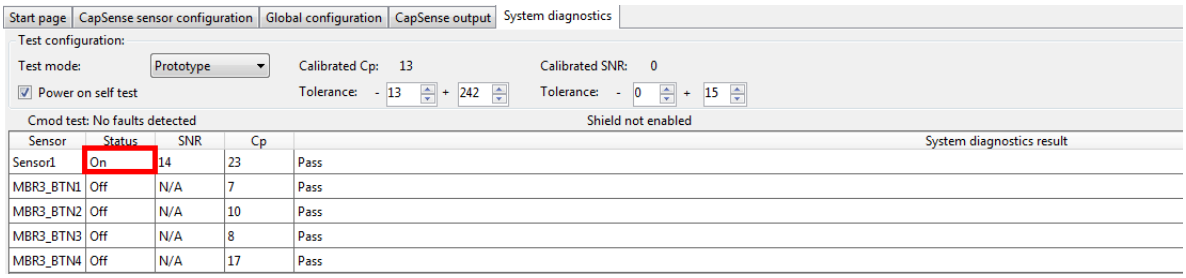

In this state, the buzzer is also enabled.

Note: The EZ-Click customiser tool computes the SNR. To establish a reliable noise range, the tool should be allowed to collect data samples for at least 30 seconds before a button press or proximity sensor state change. If sufficient noise samples are not collected, the EZ-Click tool reports an error and extremely high values for SNR.

Figure 5-13. Verify Proximity Sensor

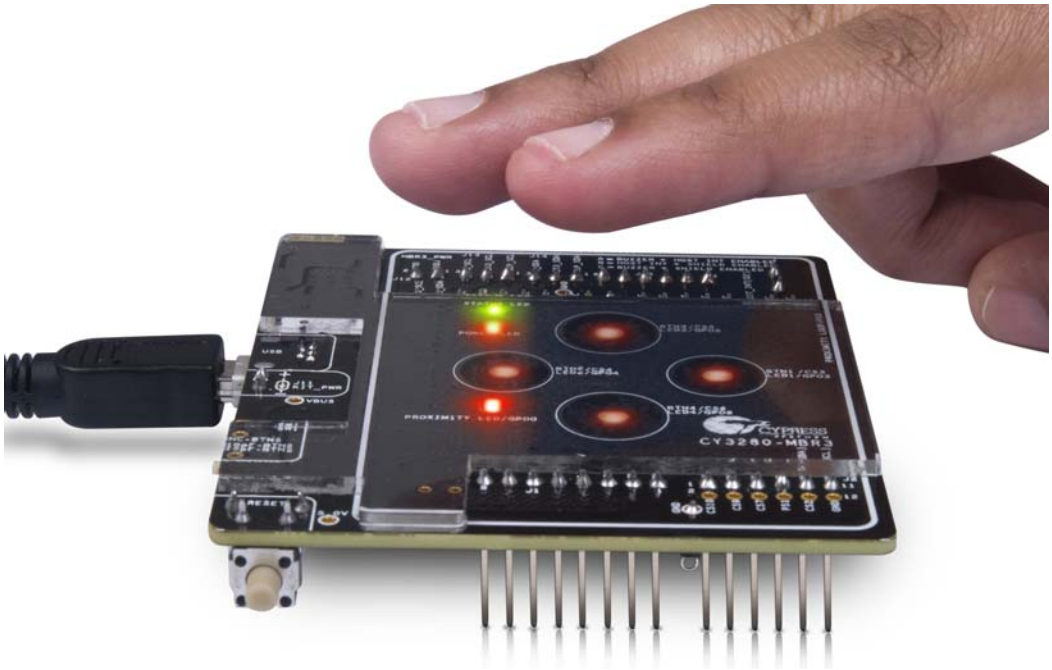

5.2.3 Water Tolerance

This configuration file configures the CY8CMBR3116 to demonstrate water tolerance, FSS, and the button auto-reset feature. The Water Tolerance configuration is the factory default configuration for the CY3280-MBR3 EVK.

5.2.3.1 Loading Water Tolerance Configuration

1. Follow steps 1 to 4 as described in section 5.2.1.1 Loading LED Toggle Configuration.
2. Double-click the *Water Tolerance.cprj* file to open it.
3. Follow steps 6 to 9 as described in section 5.2.1.1 Loading LED Toggle Configuration to continue.
4. Verify the following features:
   a. FSS feature: Touch any CapSense button; the corresponding LED turns on. Keep your finger on the same button and touch any of the other buttons; the LED corresponding to the second button does not turn on. Remove your finger from the first button and then touch the second button again; the corresponding LED turns on.

Figure 5-14. Verify FSS Feature

   b. Button auto-reset feature (5 seconds): Touch any CapSense button; the corresponding LED turns on. Do not release your finger; the LED turns off automatically after 5 seconds.

Figure 5-15. Auto-Reset Feature - LED Output on Button Touch

Figure 5-16. Auto-Reset Feature - LED Output Five Seconds After Button Touch

Note: For the buzzer and LED effect features, use a voltage setting of 5 V or 3.3 V for optimal performance.

c. Water tolerance feature: Place the additional 1-mm overlay on top of the 2-mm overlay. Place water droplets on top of the CapSense buttons using the water dropper provided with the kit. Observe that the LEDs do not turn on indicating that none of the CapSense buttons were triggered due to water.

Figure 5-17. Verify Water Tolerance - Without Finger

Touch a CapSense button and observe that it is triggered even in the presence of water droplets.

Figure 5-18. Verify Water Tolerance - With Finger

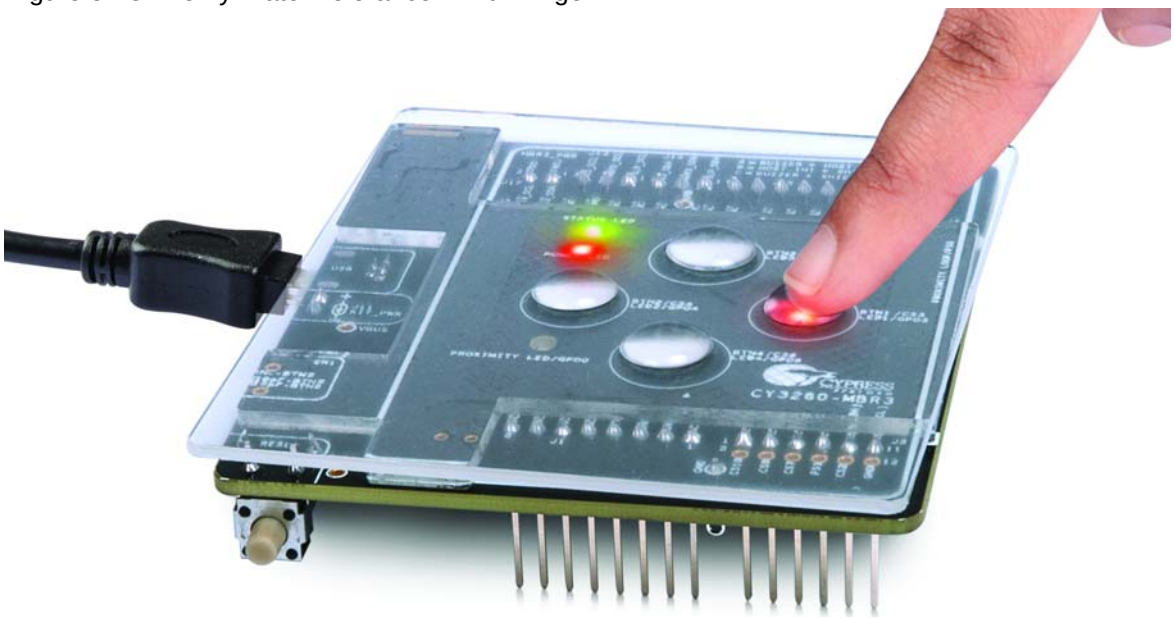

Note: The board does not have a guard sensor loop and cannot detect false touches in streaming water conditions. Therefore, while testing the board for water tolerance failure, ensure that the water droplets placed on one CapSense button do not come in contact with water droplets placed on another CapSense button.

Note: If the liquid in the dropper has significant conductivity, false touch may occur when the dropper touches the overlay on the board. This is not observed with clean water.

Water Tolerance Failure Demonstration: In the existing *Water Tolerance* configuration, uncheck the **Enable Shield** check box in the **Global Configuration** tab.

Figure 5-19. Water Tolerance Failure Demonstration

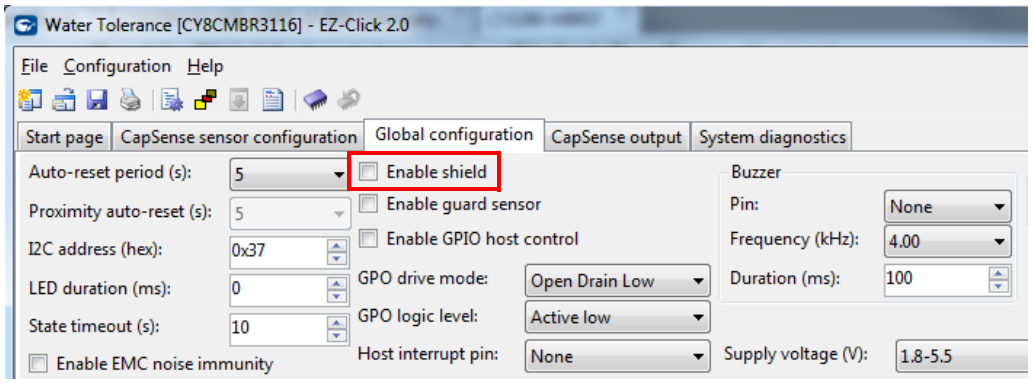

Now, click the 'Generate Config File' icon to generate the configuration; apply it to the board by clicking the 'Apply Current Config File' icon.

Press the reset switch, SW2, on the board and place water droplets on the CapSense button using the water dropper; observe that the LED turns on as if the button has been touched.

Note: The MBR3 SmartSense algorithm constantly updates baseline measurements, which may compensate for small droplets of water such that water tolerance failure is not observed. Therefore, a sufficient volume of water (one full dropper) is required to demonstrate water tolerance failure without the shield enabled.

5.3 PSoC 4 Host Example Projects

In this section, you learn how to use the CY3280-MBR3 EVK as an Arduino shield with boards compatible with the Arduino UNO form factor. The example projects in this section use the CY8CKIT-042 PSoC 4 Pioneer Kit as the baseboard. You can mount the CY3280-MBR3 EVK directly on top of the PSoC 4 Pioneer Kit, as displayed in Figure 5-20.

The kit can be used with other Arduino boards in a similar fashion. To begin, configure your kit for communication with the embedded host. On the CY3280-MBR3 EVK:

- Change the jumper position on header J13 to connect pins J13-2 and J13-3.
- Change the jumper position on header J14 to connect pins J14-2 and J14-3.
- Change the jumper position of J15 to position A; see Figure 5-21.

Connect the two kits such that the USB ports of both kits align with each other. When the USB ports are aligned, the J1, J2, J3, and J4 headers on the PSoC 4 Pioneer Kit connect to J1, J2, J3, and J4 headers on the CY3280-MBR3 EVK.

Note: The J2 header on the PSoC 4 Pioneer Kit is a dual-row header and has three extra pins for which there are no corresponding pins on the CY3280-MBR3 EVK.

Figure 5-20. Final Mounted Kit

Figure 5-21. Jumper Location on the Kit

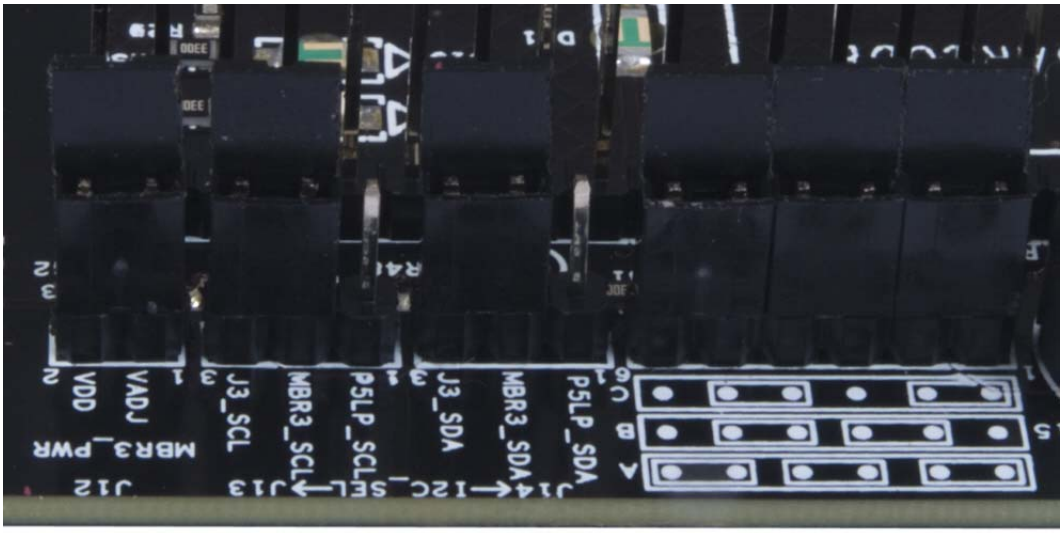

Two example projects showcase how to configure the MBR3 device and how to communicate with the device. To open these projects, you need PSoC Creator 3.0 or later. Download and install the software from www.cypress.com/PSoCCreator, if required.

To verify these projects, you need a PSoC 4 Pioneer Kit.

See Running Configuration Files and Host Projects on page 51 for information on how to access the example projects.

5.3.1 Host_LED_Toggle_Buzzer_PSoC4_Pioneer_Kit

5.3.1.1 Project Description

This example project uses PSoC 4 as the I^2C master (host) to configure the CY8CMBR3116 device. This project shows how to write data to the CY8CMBR3116 device using I^2C communication lines.

In this project, PSoC 4 loads the 128-byte configuration data to the MBR3 device using I^2C communication. The 128-byte configuration data of the LED Toggle configuration is sent to the MBR3 device.

This project can be used to learn the process of configuring the device using an external host. See Configuring the MBR3 Device From the PSoC 4 Pioneer Kit on page 72 for details

Figure 5-22. PSoC Creator Schematic

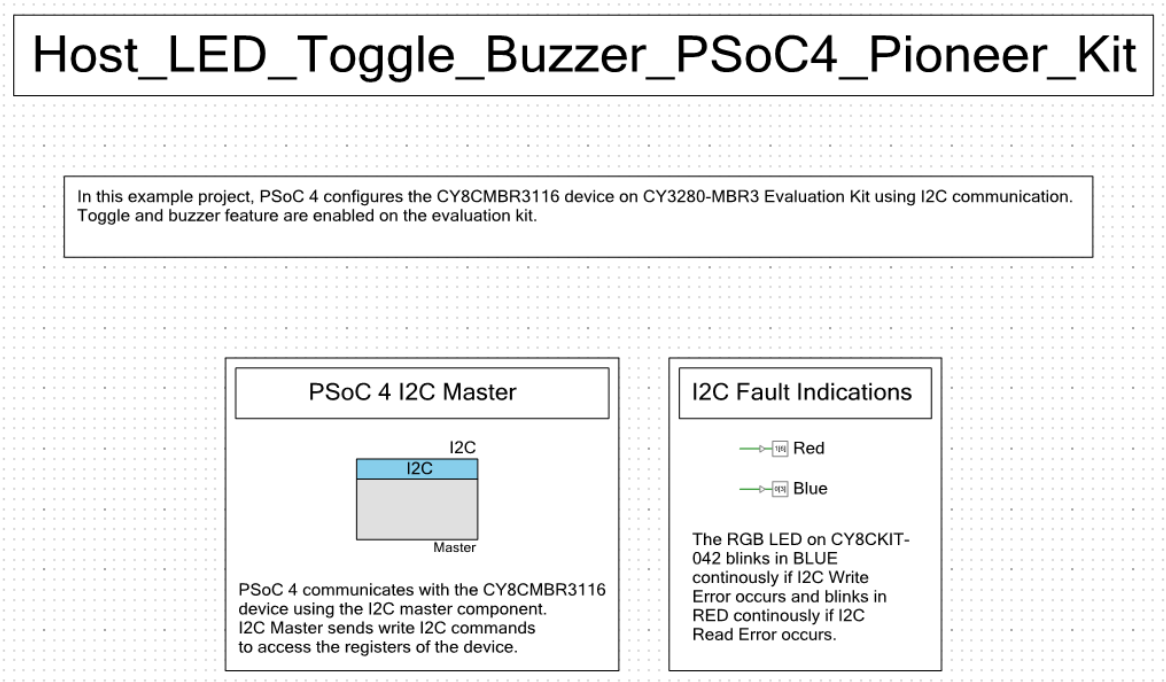

5.3.1.2 *Hardware Connections*

Connect the CY3280-MBR3 EVK to the PSoC 4 Pioneer Kit, as discussed in PSoC 4 Host Example Projects on page 62.

Ensure that the jumper J15 is connected in position A (see Figure 5-21). Table 5-2 shows the pin connections used for I^2C communication; the corresponding pins of the EVK are connected to the CY8CMBR3116 device I^2C pins.

Table 5-2. Pin Connections

Component Pin Name	Port Pin Used
I2C – SCL	P4[0]
I2C – SDA	P4[1]
Blue LED	P0[3]
Red LED	P1[6]

Ensure that I^2C selection jumpers J13 and J14 are shorted on pins 2 and 3, as shown in Figure 5-21.

5.3.1.3 *Flow Chart*

Figure 5-23 shows the flow chart of the code implemented in *main.c*.

Figure 5-23. Project Flow Chart

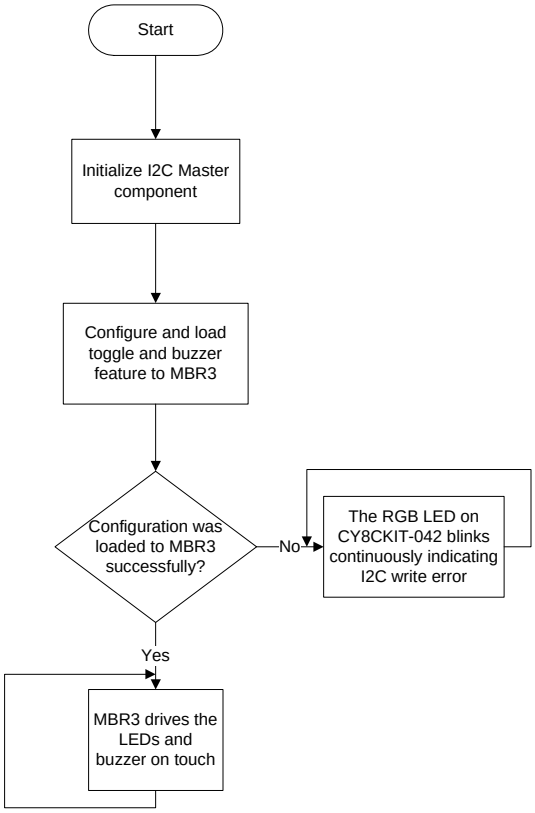

5.3.1.4 *Build and Program the PSoC 4 Project*

Follow these steps to open and program code examples:

1. Launch PSoC Creator 3.0 (or later) from the **Start** menu.
2. Open the *Host_LED_Toggle_Buzzer_PSoC4_Pioneer_Kit.cywrk* workspace by choosing **File > Open > Project/Workspace** and navigating to the directory in which your project was saved, as shown in Figure 5-24.

Figure 5-24. Navigating to the Project

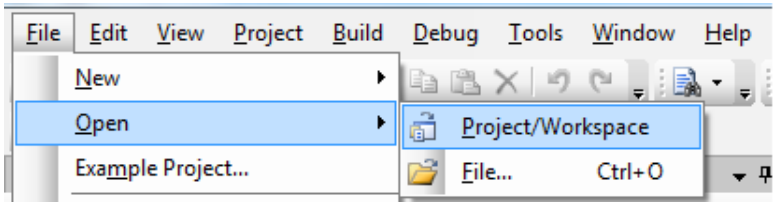

3. Build the code example by choosing **Build > Build <Project name>** or by selecting **Build <project name>** in the menu options obtained by right-clicking on the project name in the **Workspace Explorer** to generate the hex file (see Figure 5-25).

Figure 5-25. Building the Project from PSoC Creator

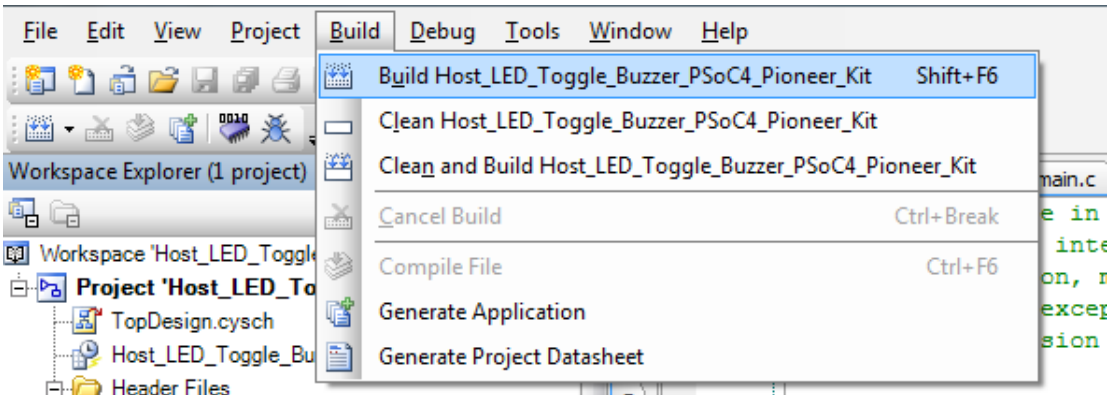

4. To program, connect the PSoC 4 Pioneer Kit to a computer using the USB cable connected to the USB port/J10 of the PSoC 4 Pioneer Kit.
5. Choose **Debug > Program** in PSoC Creator (see Figure 5-26).

Figure 5-26. Programming the Device from PSoC Creator

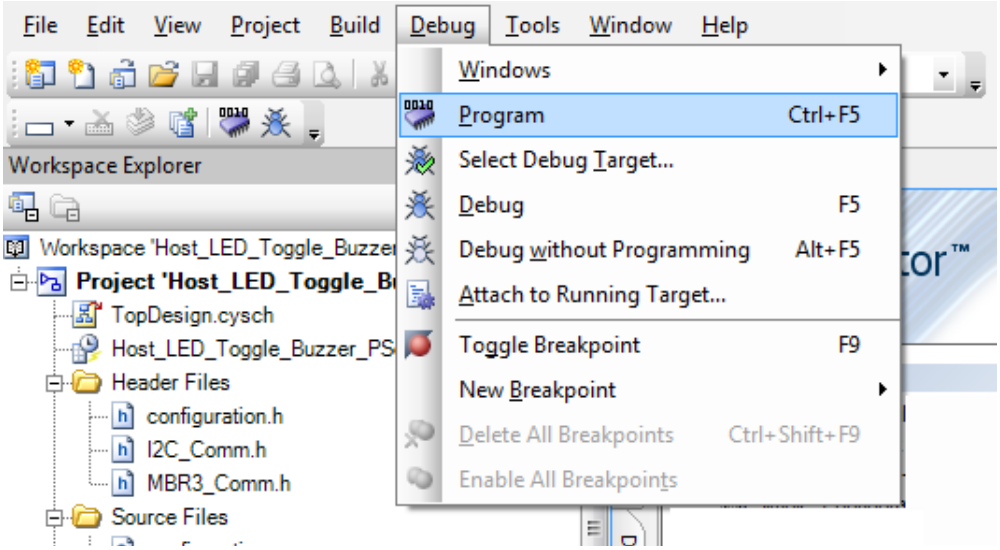

6. The CY8CKIT-042 is detected as "KitProg/<Kit number>" and is seen in the Select Debug Target window. If the PSoC 4 device is not yet acquired, PSoC Creator opens the Programming window. Select the KitProg and click the **Port Acquire** button (see Figure 5-27).

Figure 5-27. Acquiring the Device from PSoC Creator

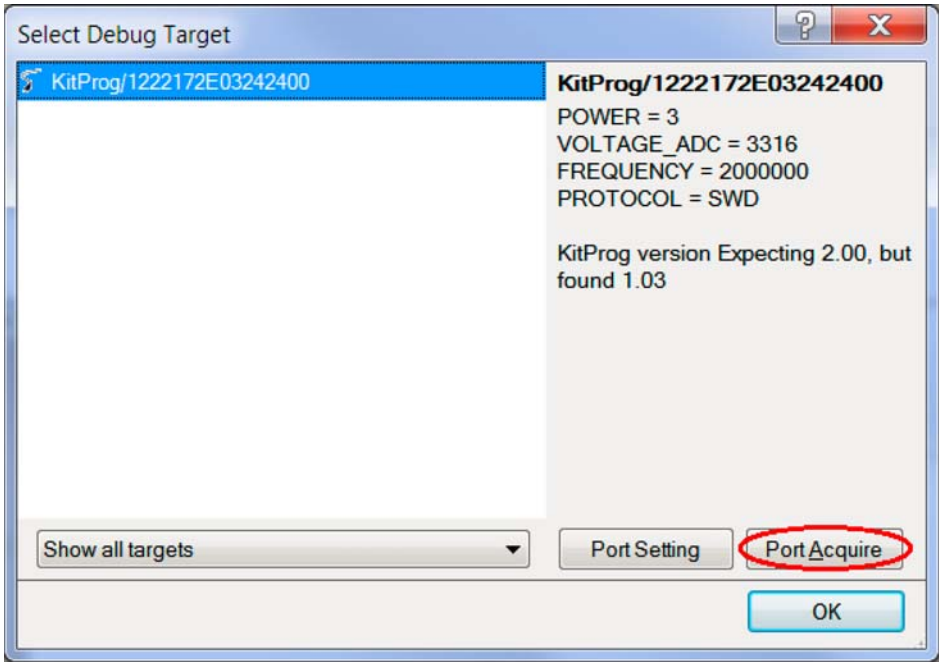

7. After the device is acquired, it is shown in a tree structure below the KitProg. Click the **Connect** button (see Figure 5-28).

Figure 5-28. Connecting the Device from PSoC Creator

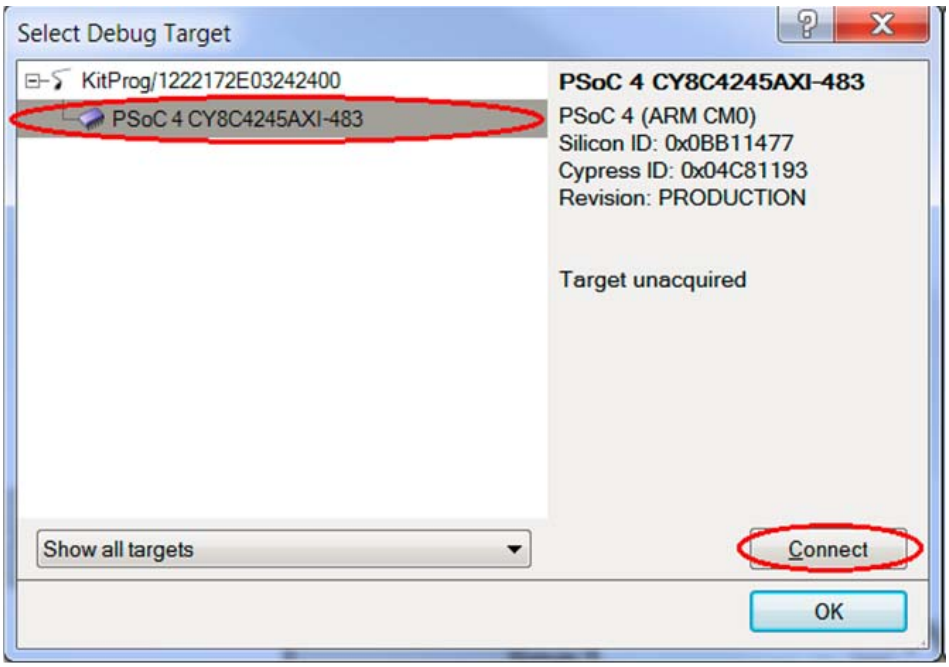

8. Click **OK** to exit the window and start programming.

5.3.1.5 *Verify Output*

Ensure that the EVK is connected to the PSoC 4 Pioneer Kit. Touch any CapSense button on the kit; the corresponding LED toggles, with audio feedback through the buzzer (see Figure 5-29). If an I^2C write error occurs while loading the configuration to the MBR3 device, the RGB LED on the PSoC 4 Pioneer Kit blinks in blue continuously indicating an I^2C write error.

Figure 5-29. Verify Output

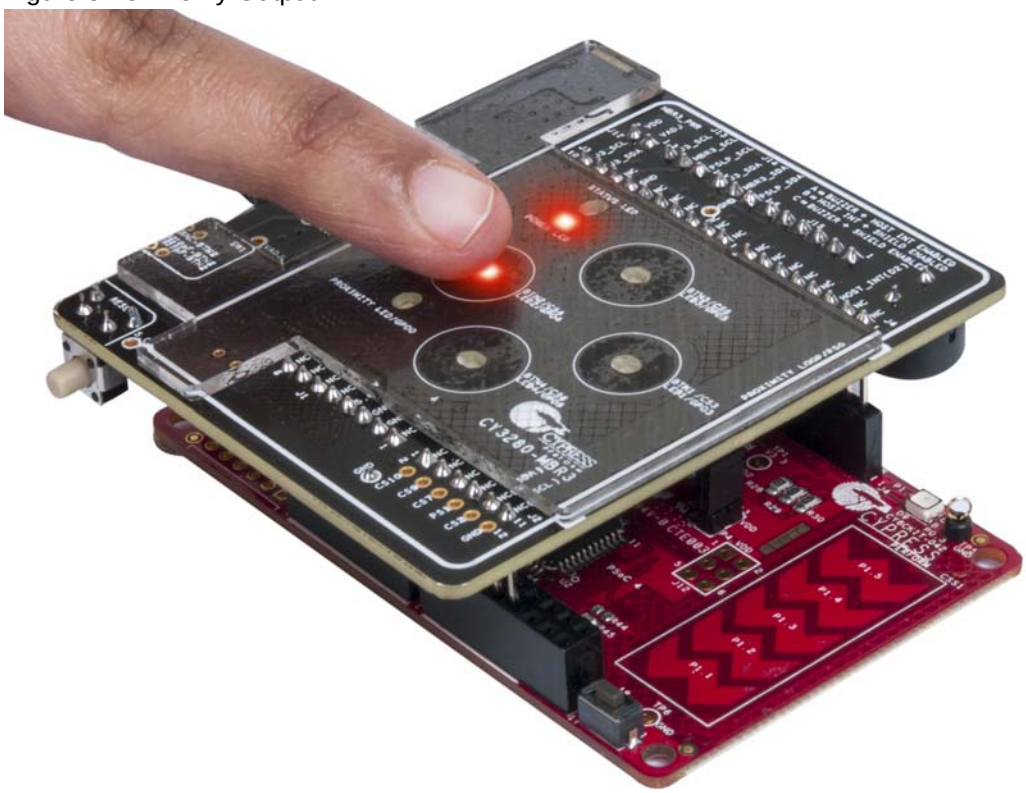

5.3.2 Host_Interrupt_LED_ON_Time_PSoC4_Pioneer_Kit

5.3.2.1 *Project Description*

This example project uses PSoC 4 as the I^2C master (host) to implement the LED-on time feature on the CY3280-MBR3 EVK using the host interrupt and host-controlled GPOs feature. This project also shows how to read the status register of the device with an I^2C master upon an interrupt from the device.

In this project, PSoC 4 loads the following configuration:

- Four button sensors enabled
- Host interrupt enabled
- Host-controlled GPOs

On every touch and release, the device issues a host interrupt (active-low pulse of 250-µs duration) to the PSoC 4 Pioneer Kit. Upon receipt of the interrupt, PSoC 4 sends an I^2C read command to read the button status register (0xAA-0xAB). Depending upon the content of the register, PSoC 4 controls the onboard RGB LED. See Table 5-4 for the expected RGB output. Also, it detects if the host interrupt was generated because of a touch or a release. If a button is released, the corresponding RGB LED keeps glowing for one second before going off. This is implemented using the counter (TCPWM component) available in PSoC 4.

Figure 5-30. PSoC Creator Schematic

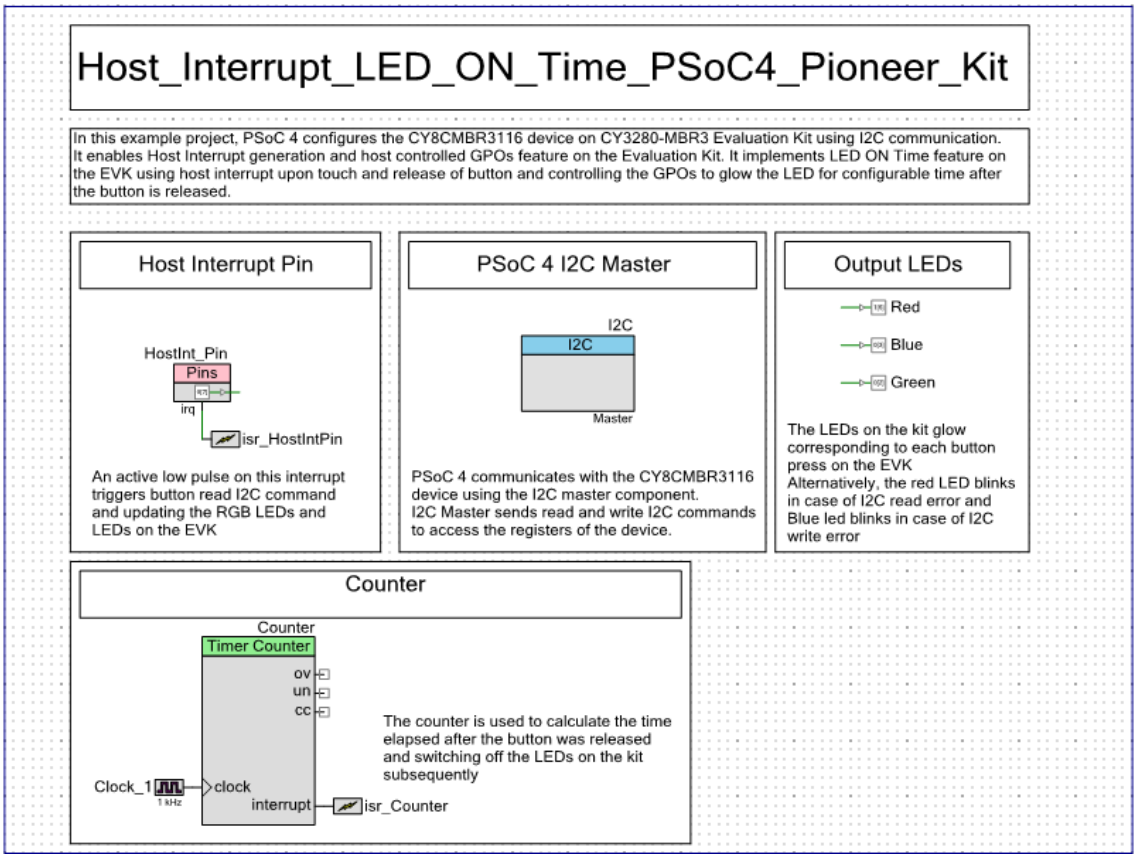

5.3.2.2 *Hardware Connections*

Connect the CY3280-MBR3 EVK to the PSoC 4 Pioneer Kit, as shown in Figure 5-20. Ensure that the jumper J15 is connected in position A (see Figure 5-21). No specific hardware connection is required for this project because all connections are hard wired.

Table 5-3 lists the pin connections used for I^2C communication; the corresponding pins of the EVK are connected to the CY8CMBR3116 device I^2C pins.

Table 5-3. Pin Connections

Component Pin Name	Port Pin Used
HostInt_Pin	P0[7]
I2C – SCL	P4[0]
I2C – SDA	P4[1]
Red_LED	P1[6]
Green_LED	P0[2]
Blue_LED	P0[3]

5.3.2.3 *Flow Chart*

Figure 5-31 shows the flow chart of the code implemented in *main.c.*

Figure 5-31. Project Flow Chart

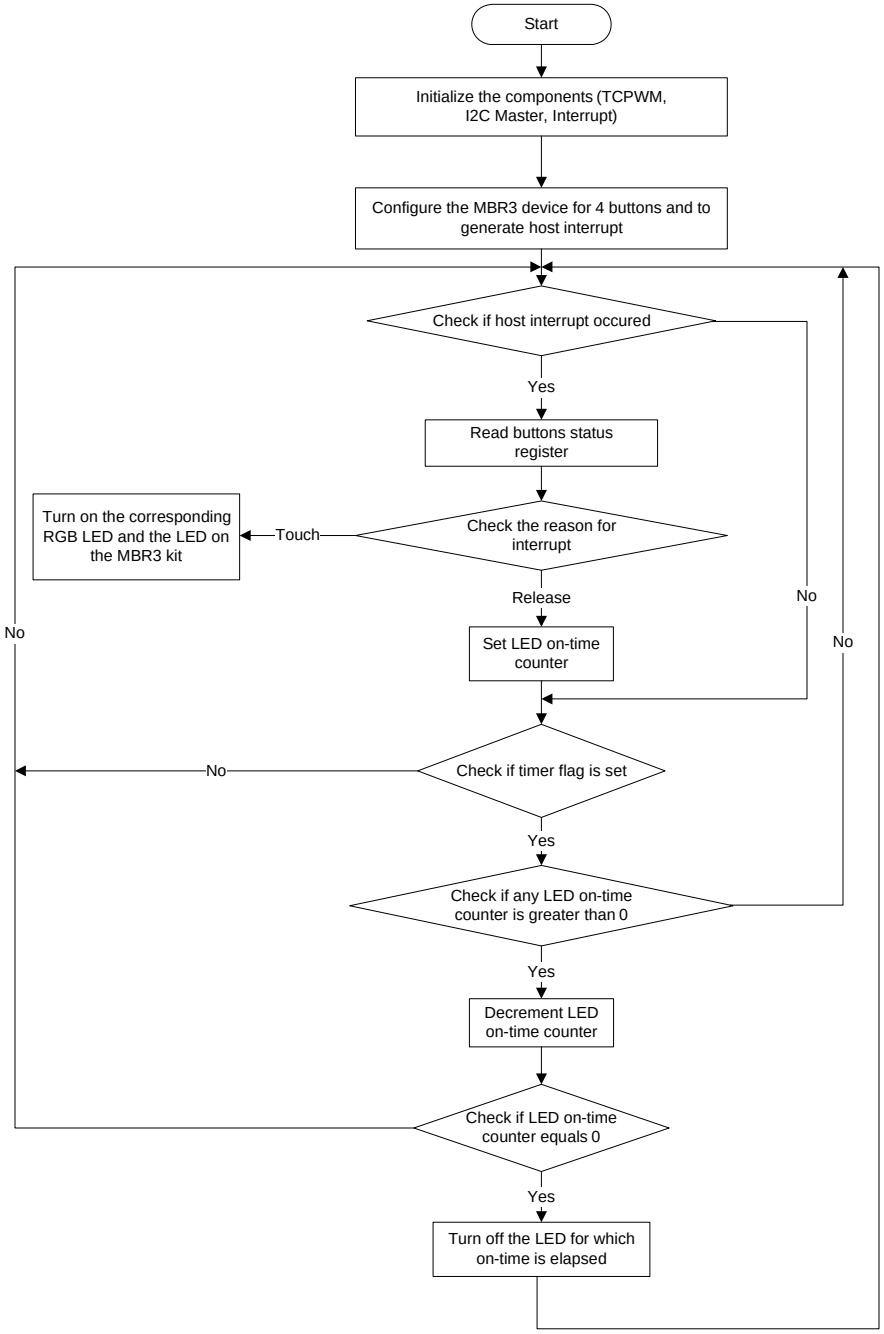

5.3.2.4 *Build and Program the PSoC 4 Project*

Follow these steps to open and program code examples:

1. Launch PSoC Creator 3.0 (or later) from the **Start** menu.
2. Open the *Host_Interrupt_LED_ON_Time_PSoC4_Pioneer_Kit.cywrk* workspace by choosing **File > Open > Project/Workspace** and navigating to the directory in which your project was saved, as shown in Figure 5-24.
3. Follow steps 3 to 8 as described in Build and Program the PSoC 4 Project on page 71 to continue.

5.3.2.5 *Verify Output*

Ensure that the EVK is connected to the PSoC 4 Pioneer Kit. Touch a CapSense button. Observe that the corresponding LED on the CY3280-MBR3 EVK turns on; the RGB LED also turns on based on the button touched according to Table 5-4. Remove the finger from the CapSense button. Observe that the corresponding LED on the CY3280-MBR3 EVK turns off immediately but the RGB LED turns off one second after removing the finger (see Figure 5-32).

Table 5-4. RGB LED Mapping on PSoC 4 Pioneer Kit with Button Sensors on CY3280-MBR3 EVK

Button Sensor Touched	LED Connection on PSoC 4 Pioneer Kit
BTN1	Green LED
BTN2	Red LED
BTN3	Blue LED
BTN4	All three LEDs on

Note: When BTN4 is touched, all three LEDs turn on; this is the expected RGB output. Therefore, if any other button is touched along with BTN4, there will not be a visible change in the RGB output because all LEDs turn on when BTN4 is touched. Similarly, if any other button is touched along with BTN4, and BTN4 is released first, all three LEDs turn off after one second; this is the expected output. There will not be any RGB output for the button that is still being touched.

Figure 5-32. Verify Output

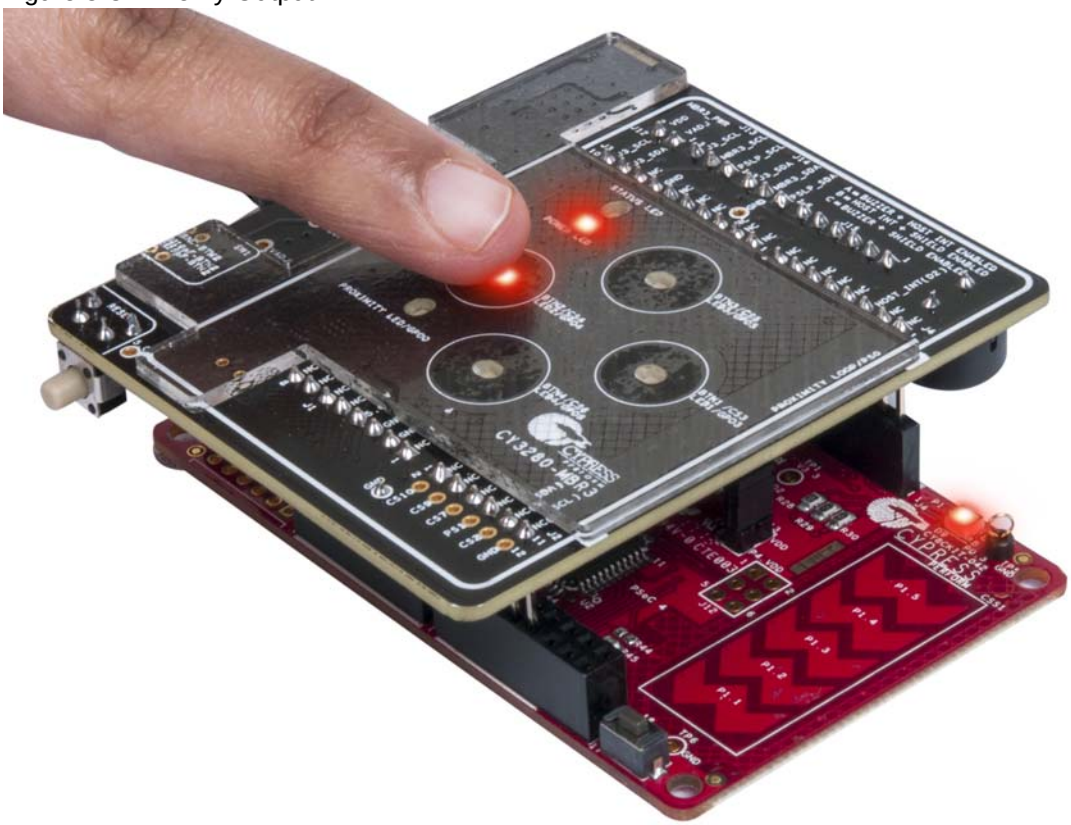

5.3.3 Configuring the MBR3 Device From the PSoC 4 Pioneer Kit

The MBR3 device can be configured as required from an external host such as the CY8CKIT-042 PSoC 4 Pioneer Kit. This can be done using the configuration files generated by EZ-Click. Follow these steps to configure the MBR3 device from an external host:

1. Open the EZ-Click 2.0 customizer tool.
2. Create a new project and select the CY8CMBR3116 device in the Product Selector Guide.
3. Configure the features as needed, considering the kit pin mapping (see Pin Mapping Between CY8CMBR3116 and CY3280-MBR3 EVK on page 34).
4. Generate the configuration file.
5. Navigate to the EZ-Click project directory and look for *<file name>.h* file inside the directory.
6. Open *<file name>.h* either from within PSoC Creator or using any text editor such as WordPad.
7. Copy and paste the contents of the 128-byte array CY8CMBR3116_configuration[128] in *<file name>.h* to the configData array in the *configuration.c* file in the PSoC 4 project.

   Note: The array is defined as "const" in the *<file name>.h* file; in the PSoC 4 project, it is a 128-byte array of unsigned char type.

   Note: When configuring the MBR3 device from an external host such as the PSoC 4 Pioneer Kit, ensure that a blank configuration or a slave address of 0x00 is not sent to the device. If this happens, see Restoring to Factory Default Slave Address from 0x00 on page 78 to revert the kit back to factory default. The valid slave address for the MBR3 device is from 0x08–0x77.

Figure 5-33. Configuration.C File

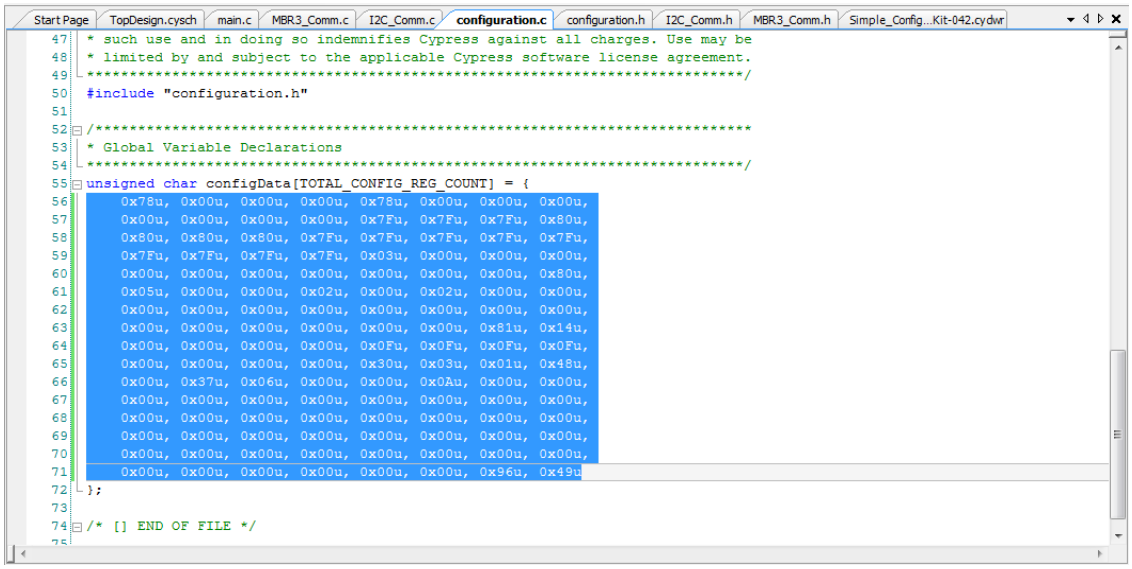

8. Build the project (see steps 3 to 8 in Build and Program the PSoC 4 Project on page 65) and program it on to the PSoC 4 Pioneer Kit; verify the functionality on the CY3280-MBR3 EVK.

6. Advanced Topics

6.1 Using PSoC 5LP as USB-I^{2}C Bridge

The PSoC 5LP on the CY3280-MBR3 EVK serves as a USB-I^{2}C bridge, which can be used to communicate with USB-I^{2}C software such as Bridge Control Panel. Bridge Control Panel (BCP) is installed along with PSoC Programmer during kit installation. BCP works with I^{2}C, SPI, and RX8 bridges, which communicate with slave devices. This application currently supports CY3240, MiniProg3, FirstTouch, FirstTouchRF, True-TouchBridge, DVKProg1, and KitProg bridges.

The following steps describe how to use the USB-I^{2}C bridge, which can communicate between BCP and CY8CMBR3116 device.

1. Open BCP from **Start** > **All Programs** > **Cypress** > **Bridge Control Panel <version number>**.
2. Connect the CY3280-MBR3 EVK to your PC via a USB port using the USB cable.
3. Ensure that the I^{2}C selection jumpers J13 and J14 are shorted between pins 1 and 2 to enable I^{2}C communication between PSoC 5LP and the MBR3 device. Connect jumper J15 in setting C, as shown in Figure 5-1.
4. Select the KitProg in the BCP to use the USB-I^{2}C functionality. On successful connection, the 'Connected' and 'Powered' tabs turn green, as shown in Figure 6-1.

Figure 6-1. KitProg USB-I^{2}C Connected in Bridge Control Panel

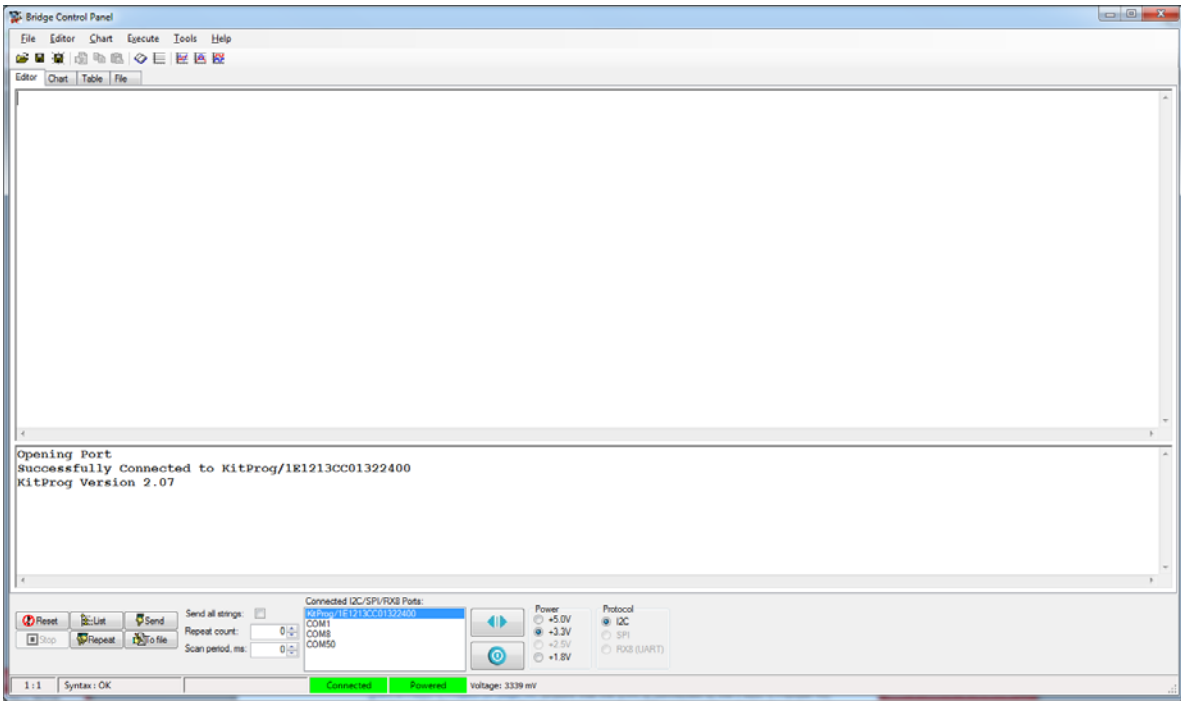

5. The EZ-Click customizer tool generates an IIC file, which can be used in the BCP software. Click **File** > **Open File** and navigate to the EZ-Click project directory in `<Install_Directory>\CY3280-MBR3 EVK\<version>\Firmware\Config Files\` and open the required project and select the IIC file.

Figure 6-2. Opening IIC File

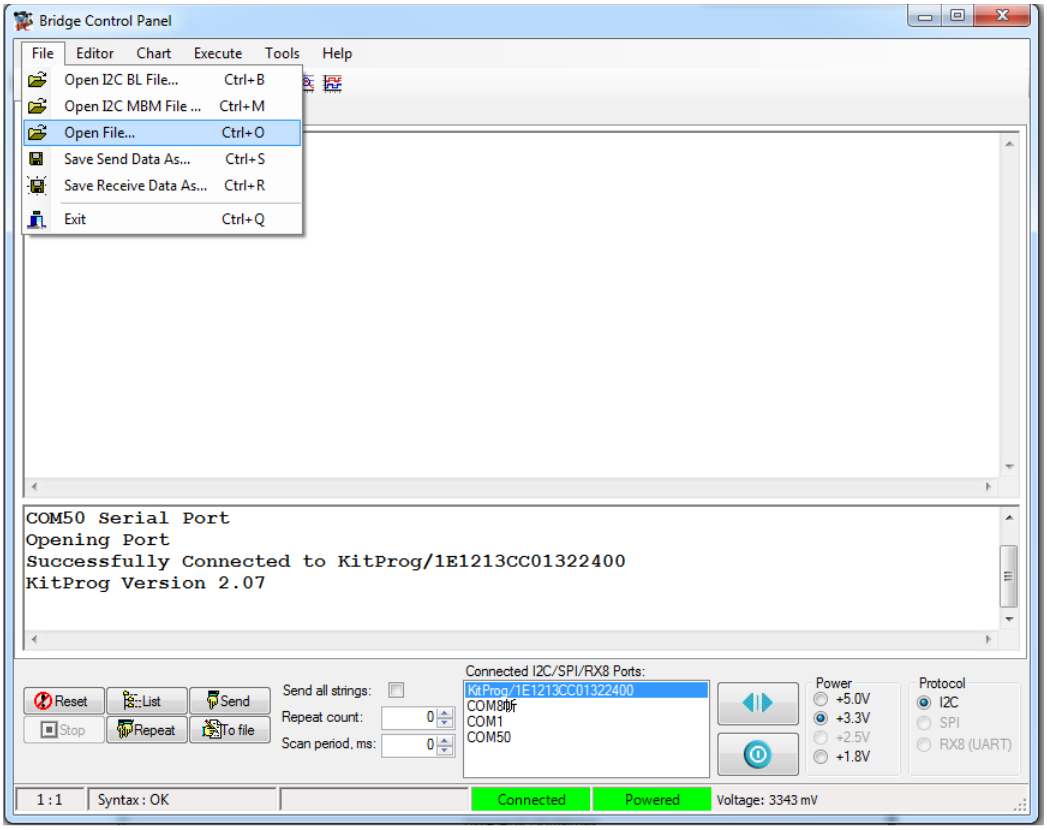

Figure 6-3. LED Toggle.iic File

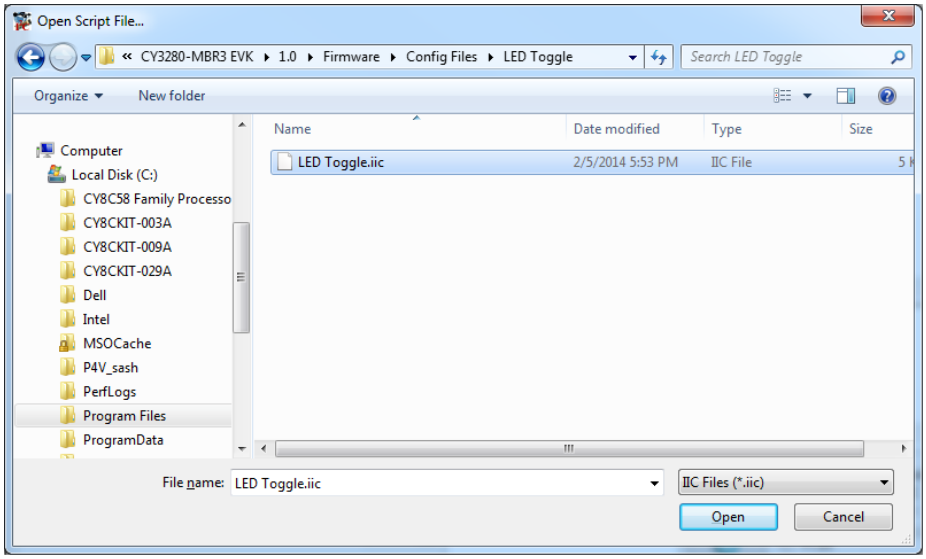

Note: The location of the *LED Toggle.iic* file is shown as reference. Any IIC file can be used.

6. The MBR3 device is in a deep-sleep state until a CapSense or I^{2}C activity occurs. When receiving an I^{2}C command while in deep sleep, MBR3 will NACK the request and begin to wake from sleep. This I^{2}C approach is in lieu of I^{2}C clock stretching, which may corrupt non-stretching compliant devices on the bus. An I^{2}C command sent from BCP may not be acknowledged. Therefore, resend the I^{2}C command until the MBR3 device wakes and acknowledges. Two dummy write operations to the MBR3 device are sufficient before sending the 128-byte configuration. To send a dummy write, edit each write command in the IIC file with the prefix “w 37 0 p w 37 0 p”.
7. From the BCP, transfer the 128-byte configuration data to the MBR3 device; to do this, place the cursor on the command to be sent to the MBR3 device and click the **Send** button on the GUI or press the **Enter** key on your keyboard. The log shows if the transaction is a success or failure. A “+” after each byte indicates that the transaction is a success and a “–” indicates that it is a failure (see Figure 6-4).
8. Send both I^{2}C commands in the IIC file to see the configuration in effect on the CY3280-MBR3 kit.
9. Press the reset switch, SW2, on the kit. The configuration specified by 128 bytes in the first command will take effect.

   Note: See LED Toggle on page 52 for more details and expected output of the LED Toggle configuration.

Figure 6-4. Writing to I^{2}C Slave in BCP

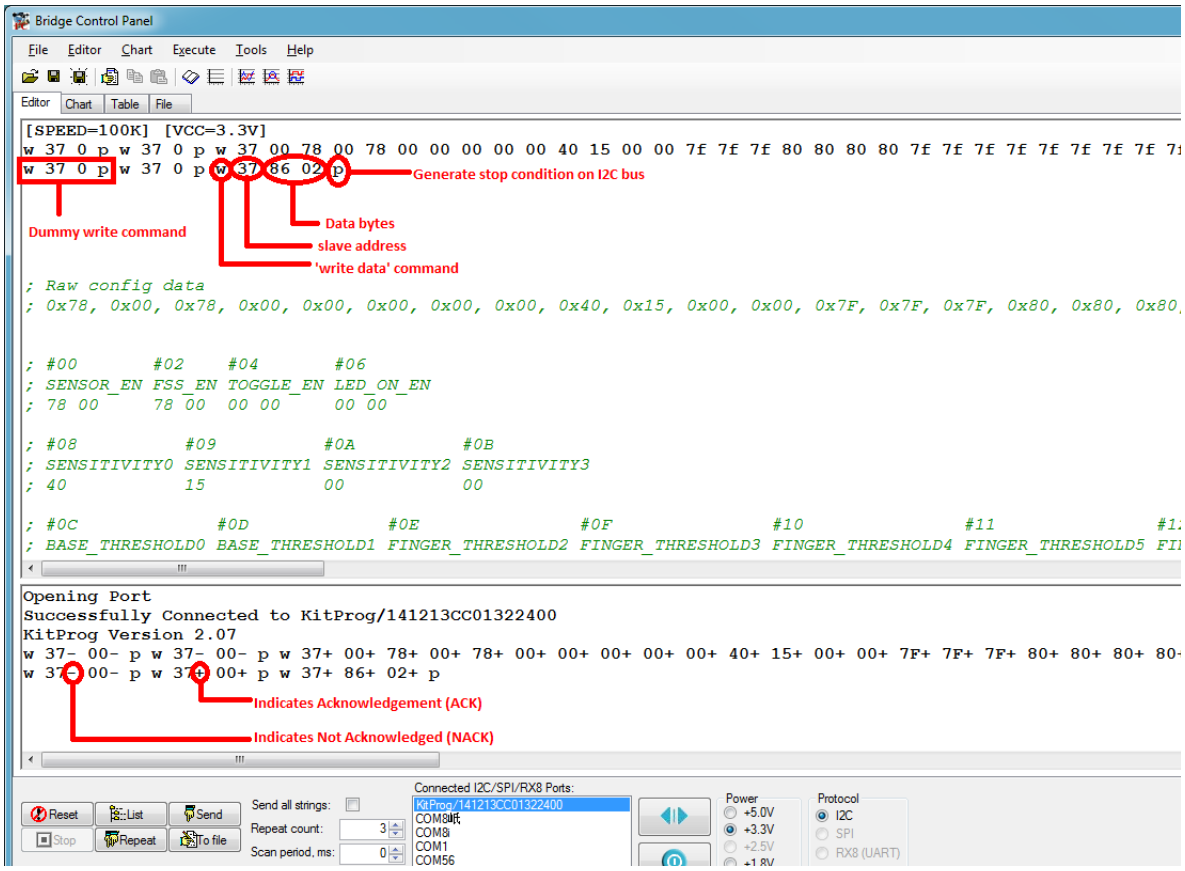

10. Read five bytes of data from the register offset address 0x00 of the MBR3 device. The log shows if the transaction is a success or a failure.

Figure 6-5. Reading from I²C Slave in BCP

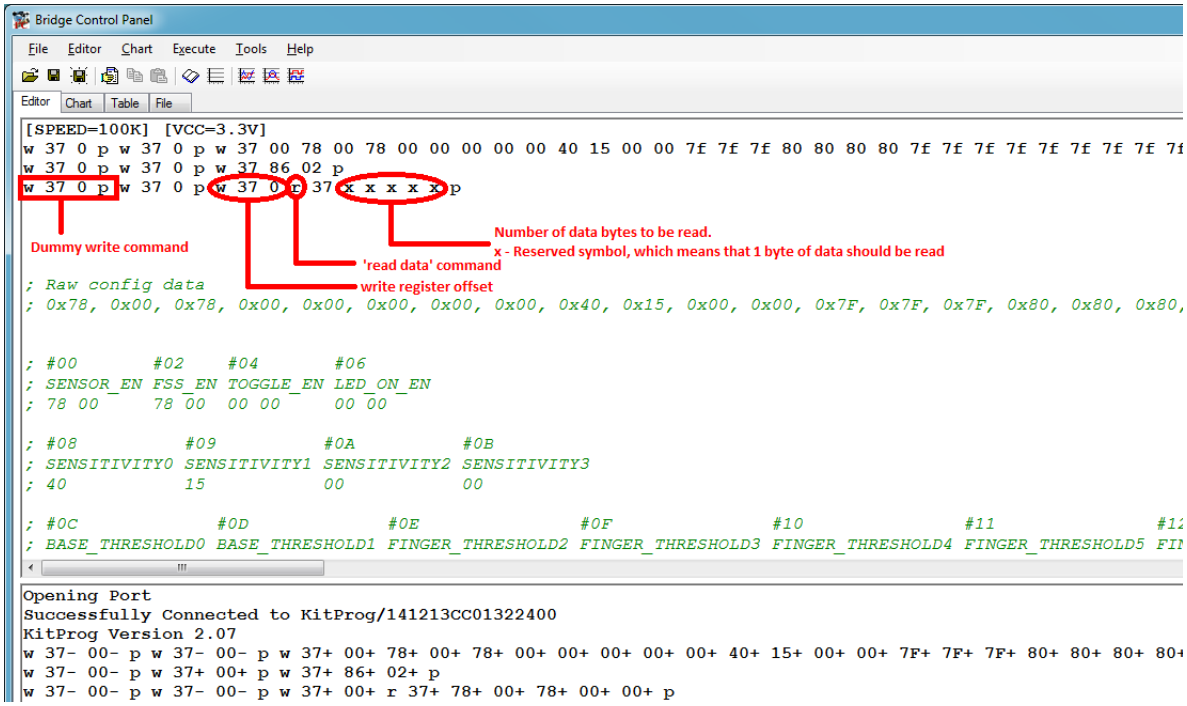

The command format to communicate with this kit using the BCP is as follows:

- Write data command format: To write ‘N’ bytes of data after the register offset address, use this format to send data.

w	Slave address	Register offset	Data to write (N bytes)	p

- Read data command format: To read ‘N’ bytes of data beginning with the register offset address, use this format to receive data.

w	Slave address	Register offset	r	Slave address	write ‘N’ number of x’s with spaces	p

Notes:

- The Write/Read transaction with an MBR3 device requires specifying an offset address to the MBR3 device from which the data reading/writing should start. The MBR3 device automatically increments the register address for every byte after the offset address. Therefore, a Read/Write transaction with an MBR3 device starts with an I²C write operation to specify the register offset to the MBR3 device.
- All bytes in the IIC file are in hex format.

The status box below the editor window shows the offset register content, where:

- w – Write command.
- Address – Slave device address (in hex). Default address for the device on this kit is 0x37.
- Register offset – Offset address of the configuration register you want to write. See the datasheet for the list of registers and their offset addresses.
- Data – Write ‘N’ byte data here to write sequentially beginning with the offset address.
- r – Read command.

- x – Reserved symbol. Each ‘x’ in the command signifies that 1 byte of data should be read.
- p – Stop command

6.2 Restoring to Factory Default Slave Address from 0x00

When configuring the MBR3 device from an external host such as the CY8CKIT-042 PSoC 4 Pioneer Kit, ensure that either a blank configuration (128 bytes of 0x00) or a slave address of 0x00 is not programmed into the MBR3 silicon. The valid slave address for MBR3 is 0x08–0x77 (8–119).

If a slave address is configured to the MBR3 device, the kit becomes unusable because it cannot be reconfigured from the EZ-Click customizer tool. In such a situation, follow these steps to restore the slave address to the default slave address 0x37.

1. Disconnect the CY3280-MBR3 kit from the external host or CY8CKIT-042.
2. Change the I^2C selection jumpers J13 and J14 in positions 1 and 2.
3. Change the J15 setting to setting C.
4. Launch BCP, as explained in steps 1 to 4 in 6.1 Using PSoC 5LP as USB-I2C Bridge.
5. Click **File > Open** and navigate to the Water Tolerance configuration project directory and open *Water Tolerance.iic* in BCP.
6. Change "37" next to **w** to "00" in both the IIC commands. Also, edit the IIC commands with dummy write operations and send the configuration to the MBR3 device, as explained in step 6 of Using PSoC 5LP as USB-I2C Bridge on page 74.

Figure 6-6. Restore Factory Default Slave Address in BCP

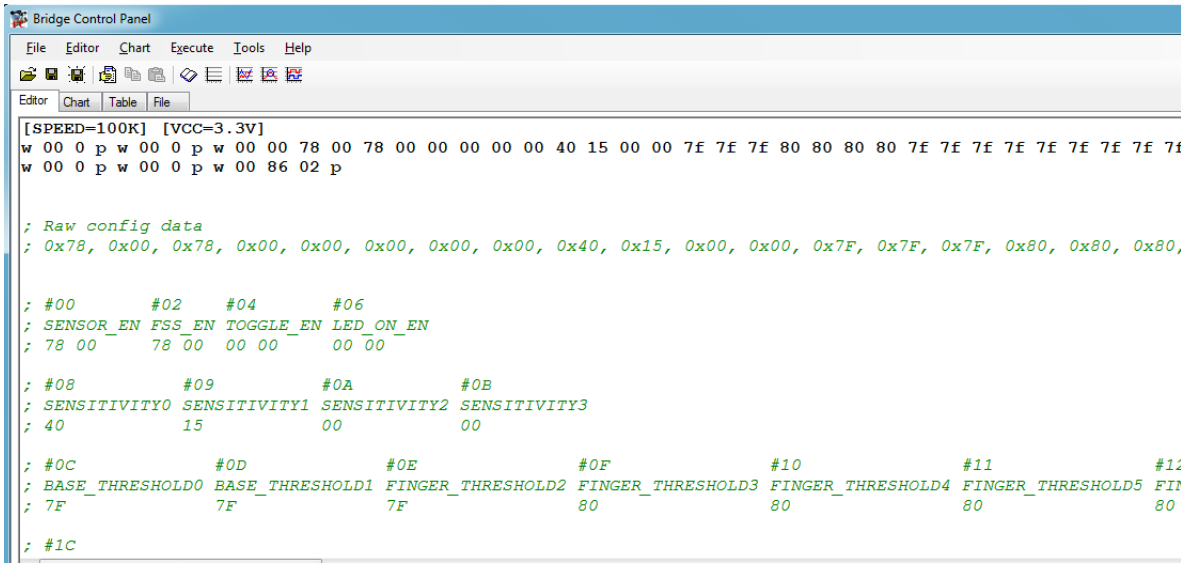

7. Both the I^2C commands are sent one after another. Ensure that all bytes of the I^2C command are ACK'ed (acknowledged). If any I^2C command is NACK'ed (not acknowledged), send the I^2C commands again. See Figure 6-4 for ACK and NACK indications.
8. After both the commands are successfully sent to the MBR3 device, that is, all bytes are ACK'ed, press the reset switch (SW2) on the CY3280-MBR3 EVK.
9. The kit will become operational again and exhibit the "Water Tolerance" output. Refer to Water Tolerance on page 58. The kit will also be recognized with the slave ID of 0x37 in EZ-Click.

A. Appendix

A.1 Schematic

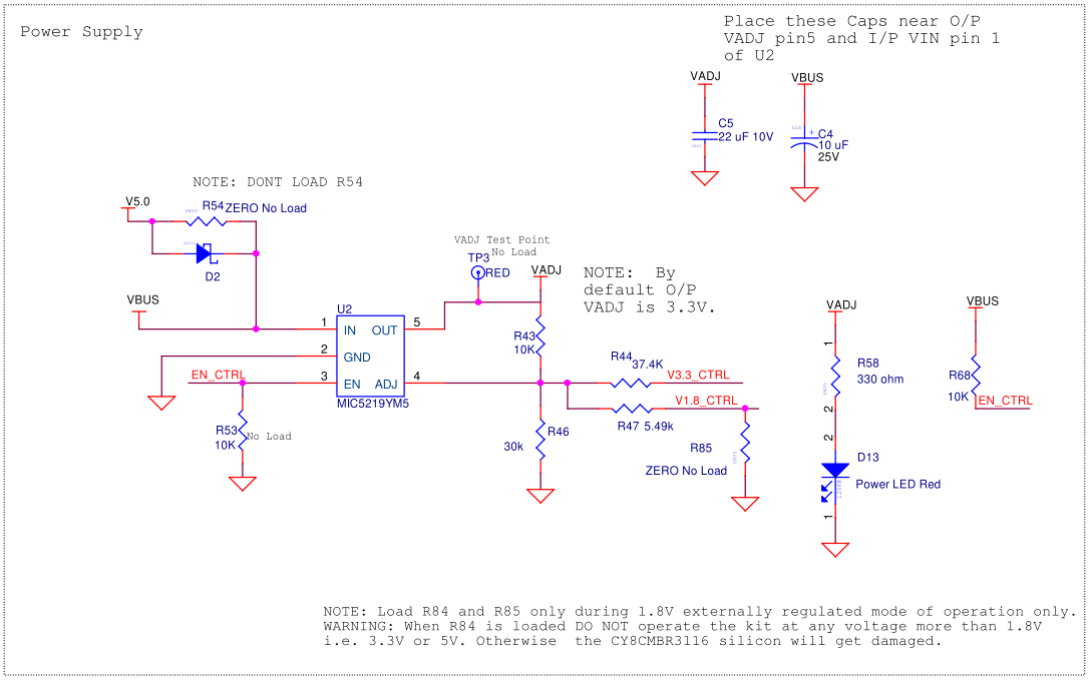

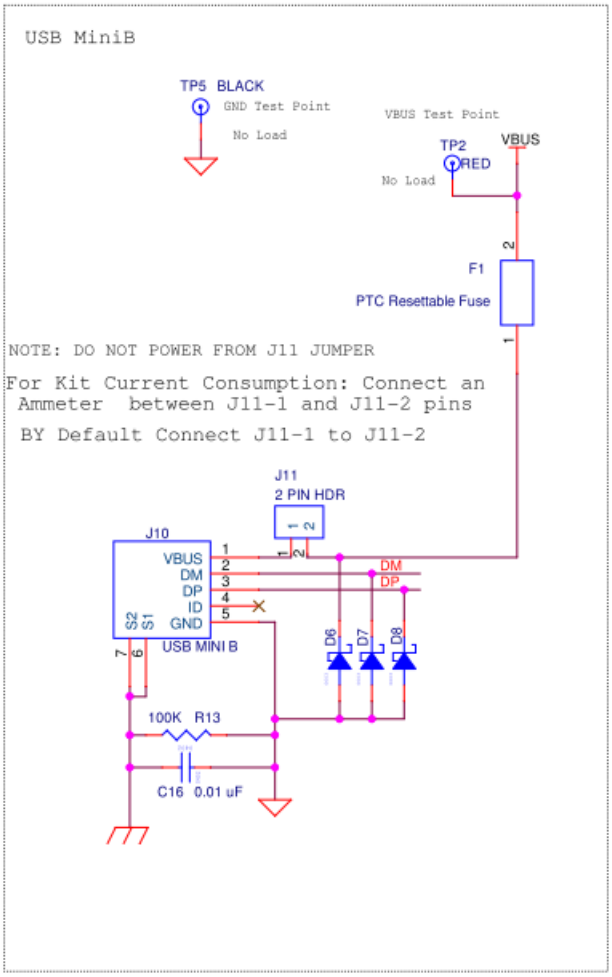
USB MiniB
TP5 BLACK
GND Test Point
No Load
VBUS Test Point
TP2
RED
VBUS
No Load
F1
PTC Resettable Fuse
NOTE: DO NOT POWER FROM J11 JUMPER
For Kit Current Consumption: Connect an Ammeter between J11-1 and J11-2 pins
BY Default Connect J11-1 to J11-2
J11
2 PIN HDR
J10
VBUS
DM
DP
ID
GND
S2
S1
USB MINI B
DM
DP
D6
D7
D8
100K R13
C16 0.01 uF

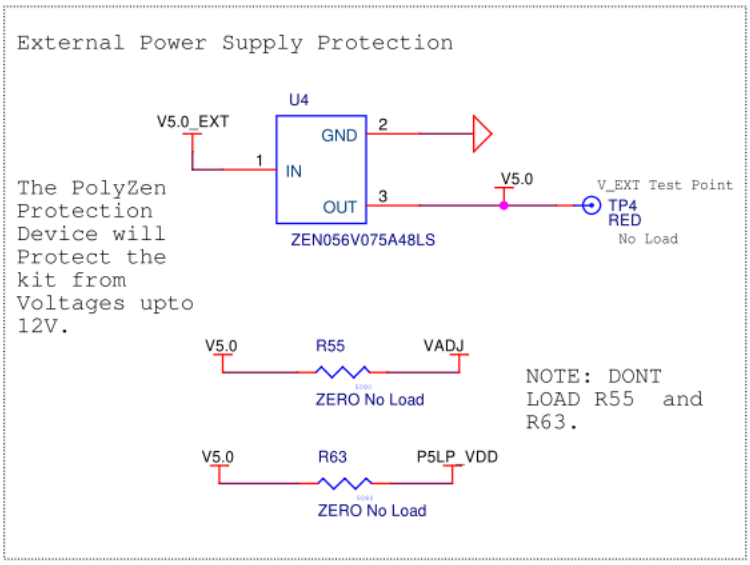
External Power Supply Protection
U4
V5.0_EXT
GND
IN
OUT
ZEN056V075A48LS
V5.0
V_EXT Test Point
TP4
RED
No Load
The PolyZen Protection Device will Protect the kit from Voltages upto 12V.
V5.0
R55
VADJ
ZERO No Load
NOTE: DONT LOAD R55 and R63.
V5.0
R63
P5LP_VDD
ZERO No Load

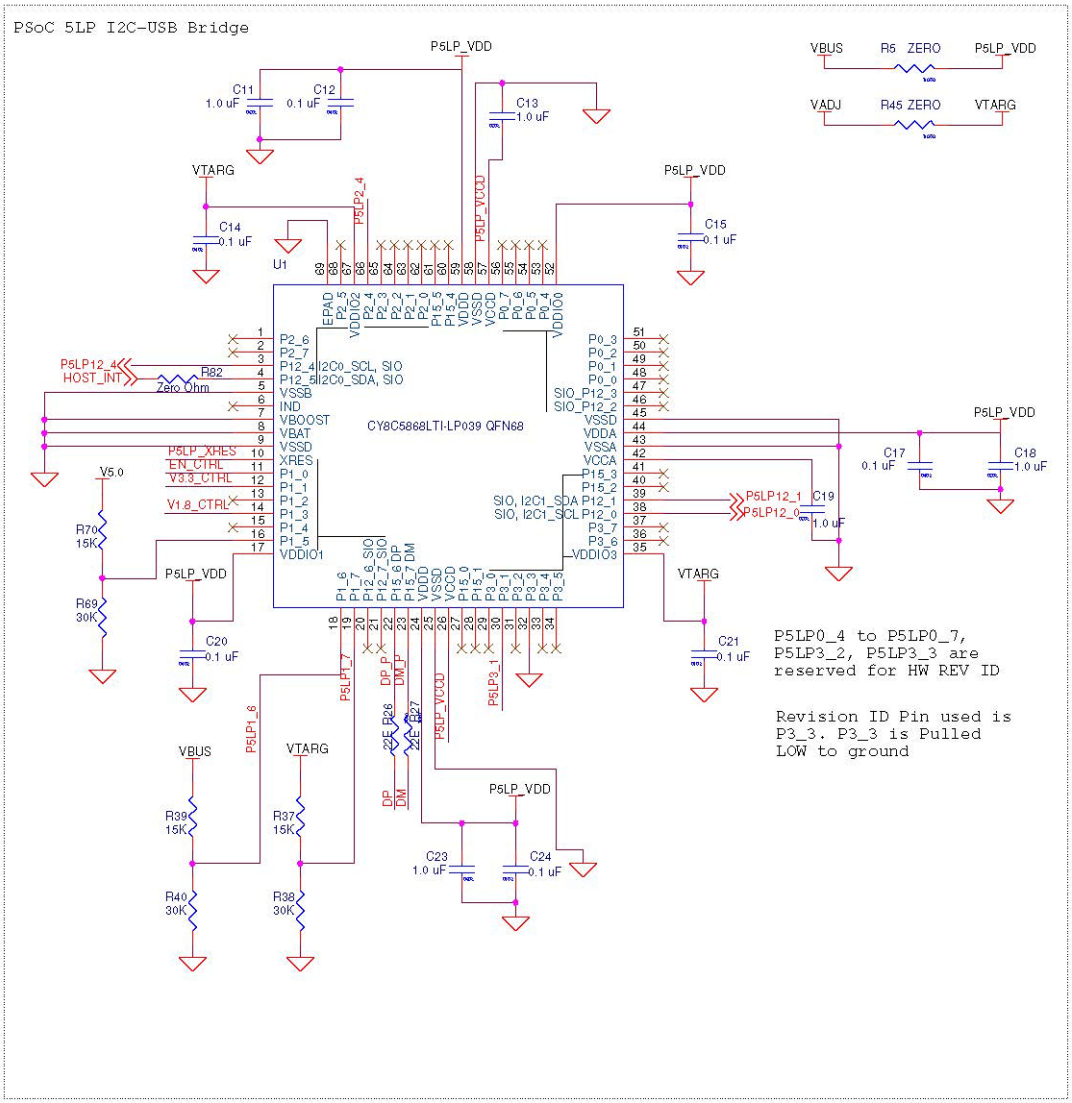
PSoC 5LP I2C-USB Bridge
CY8C5868LTI-LP039 QFN68
P5LP0_4 to P5LP0_7, P5LP3_2, P5LP3_3 are reserved for HW REV ID
Revision ID Pin used is P3_3. P3_3 is Pulled LOW to ground

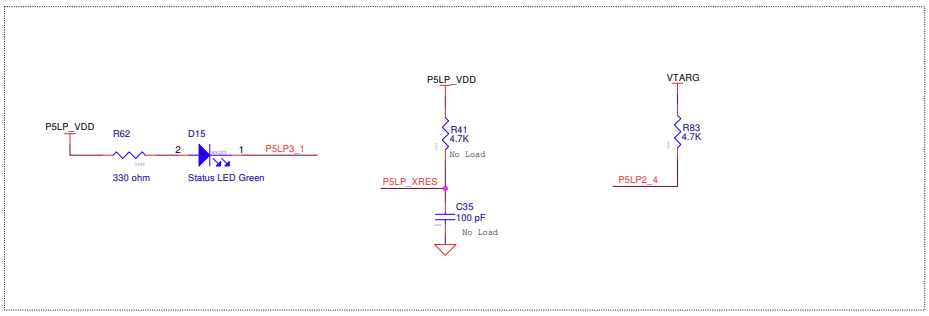
P5LP_VDD
R62
330 ohm
D15
Status LED Green
P5LP3_1
R41
4.7K
No Load
P5LP_XRES
C35
100 pF
No Load
VTARG
R83
4.7K
P5LP2_4

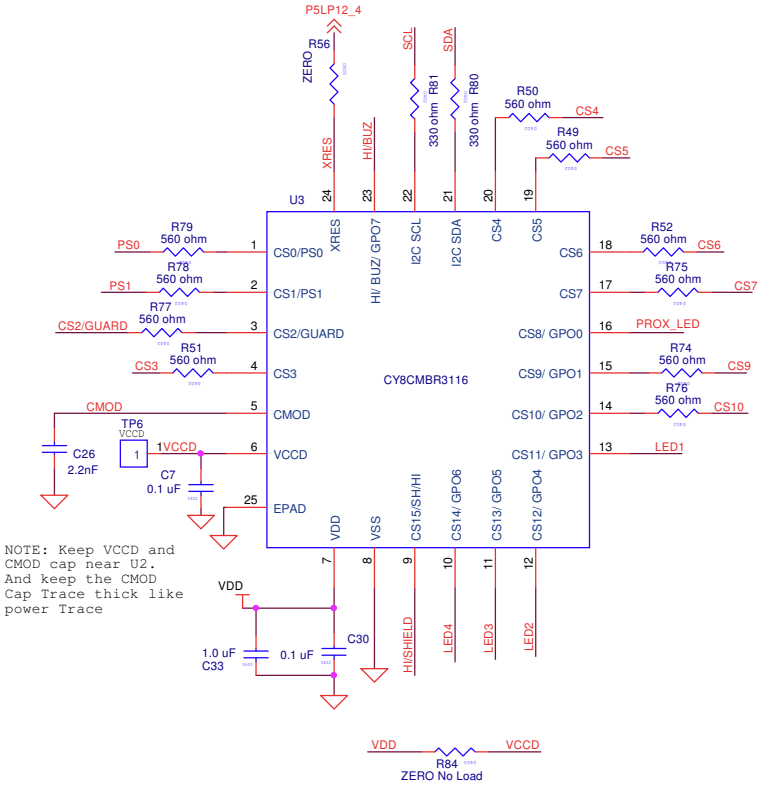

NOTE: Keep VCCD and CMOD cap near U2. And keep the CMOD Cap Trace thick like power Trace

NOTE: Load R84 and R85 only during 1.8V externally regulated mode of operation.
WARNING: When R84 is loaded DO NOT operate the kit at any voltage more than 1.8V i.e. 3.3V or 5V.Otherwise the CY8CMBR3116 silicon will get damaged.

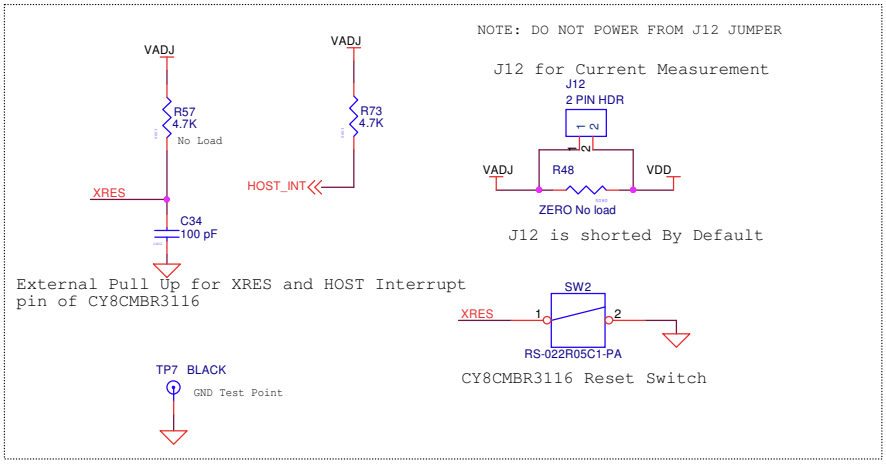

AT ANY TIME DONT LOAD BOTH R66
and R67.

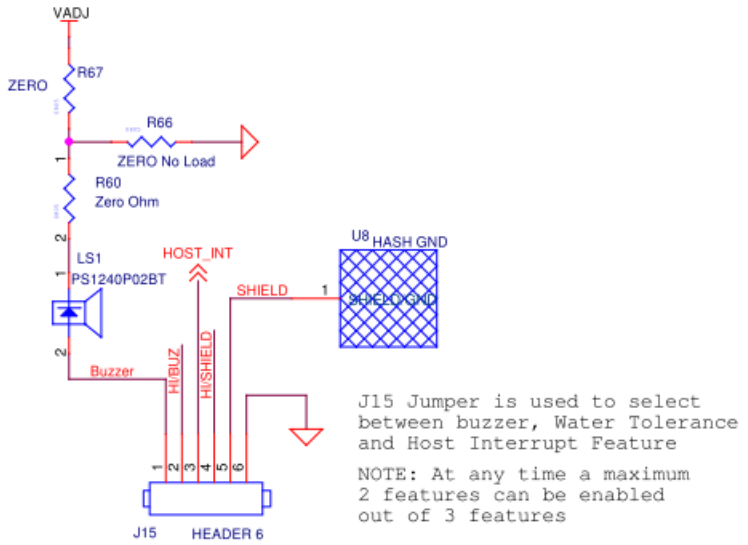

Setting	J15 Jumper Connection	Enabled Features (2 features at a time)
A	Connect J15-1 to J15-2 , J15-3 to J15-4 and J15-5 to J15-6 using 3 shunts	Buzzer Enabled, Host Interrupt Enabled and Water Tolerance is Disabled.
B	Connect J15-2 and J15-3, J15-4 to J15-5 using 2 shunts	Buzzer Disabled, Host Interrupt Enabled and Water Tolerance is Enabled
C	By Default connect J15-1 and J15-2, J15-4 to J15-5 using 2 shunts	Buzzer Enabled, Host Interrupt Disabled and Water Tolerance is Enabled

Long Trace/Short Trace selection for CapSense Button4 (BTN4)

SW3 Selection	Additional Parasitic Capacitance on BTN4
Pos/Pin 1	Long Trace
Pos/Pin 2	Short Trace

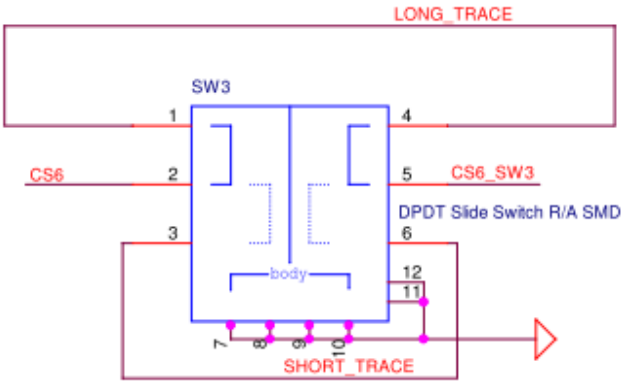

Parasitic Capacitance on Button2(BTN2)

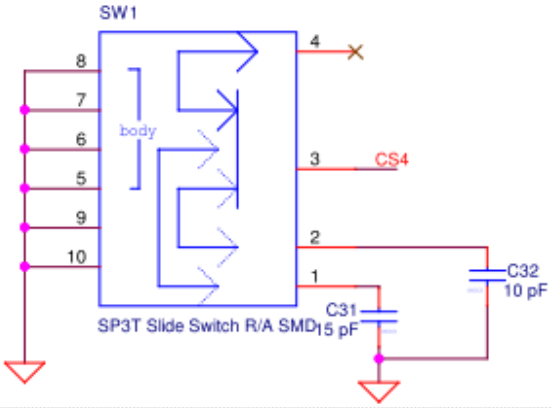

SW1 Selection	Additional Parasitic Capacitance on BTN2
Pos/Pin 1	15pF
Pos/Pin 2	10pF
Pos/Pin 3	0pF

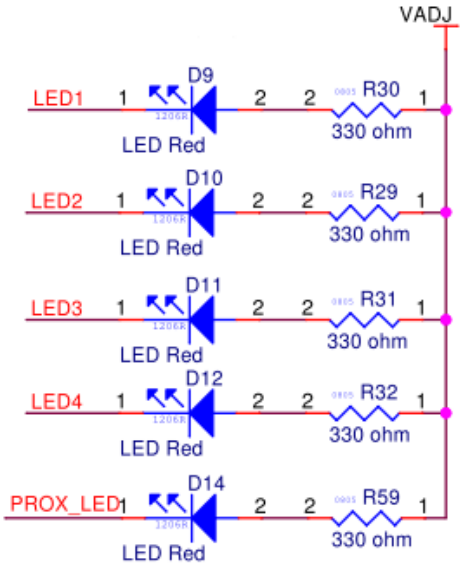

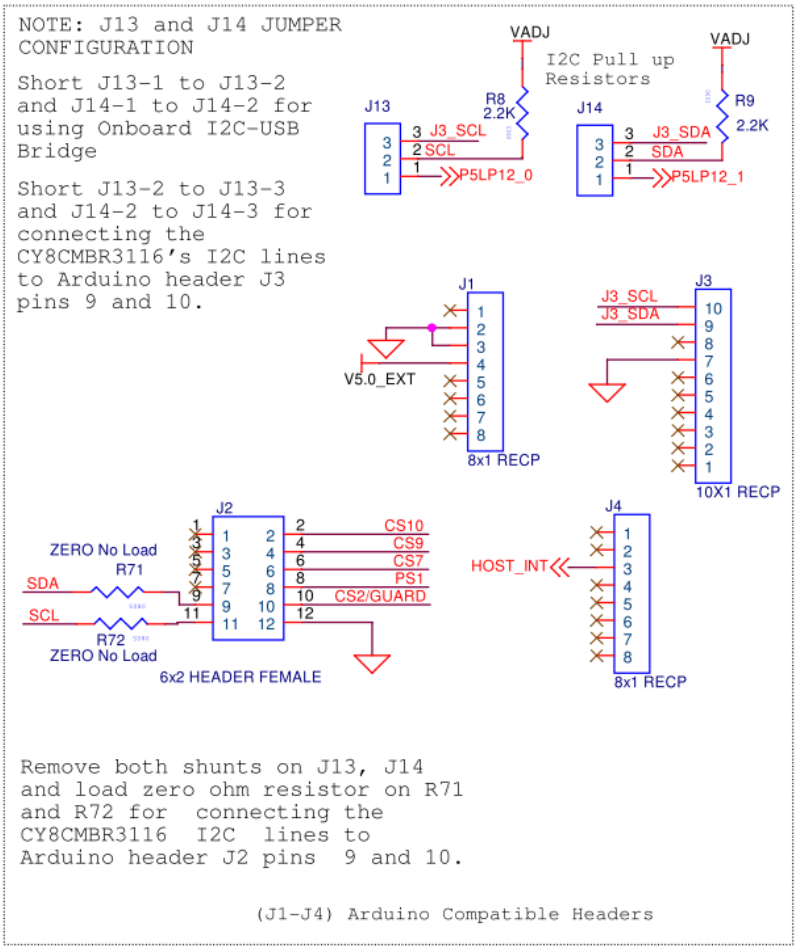
NOTE: J13 and J14 JUMPER CONFIGURATION
Short J13-1 to J13-2 and J14-1 to J14-2 for using Onboard I2C-USB Bridge
Short J13-2 to J13-3 and J14-2 to J14-3 for connecting the CY8CMBR3116's I2C lines to Arduino header J3 pins 9 and 10.
VADJ
I2C Pull up Resistors
VADJ
J13
R8 2.2K
3 J3_SCL
2 SCL
1
P5LP12_0
J14
R9 2.2K
3 J3_SDA
2 SDA
1
P5LP12_1
J1
V5.0_EXT
8x1 RECP
J3
J3_SCL
J3_SDA
10X1 RECP
J2
ZERO No Load
R71
SDA
SCL
R72
ZERO No Load
CS10
CS9
CS7
PS1
CS2/GUARD
6x2 HEADER FEMALE
J4
HOST_INT
8x1 RECP
Remove both shunts on J13, J14 and load zero ohm resistor on R71 and R72 for connecting the CY8CMBR3116 I2C lines to Arduino header J2 pins 9 and 10.
(J1-J4) Arduino Compatible Headers

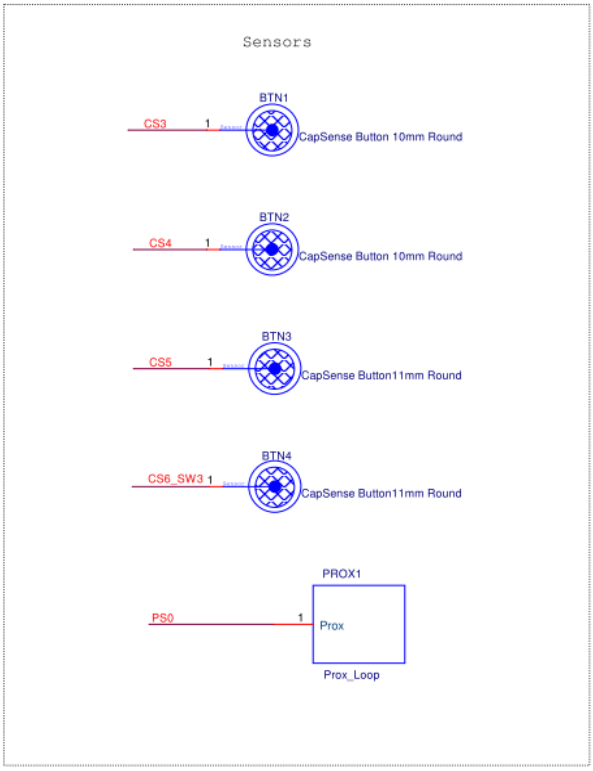
Sensors
BTN1
CS3
1
CapSense Button 10mm Round
BTN2
CS4
1
CapSense Button 10mm Round
BTN3
CS5
1
CapSense Button11mm Round
BTN4
CS6_SW3
1
CapSense Button11mm Round
PROX1
PS0
1
Prox
Prox_Loop

A.2 Pin Assignment Table

Pin No.	Pin Name	Type	Description	Usage
1	CS0/PS0	I/O	CapSense button/proximity sensor, controls GPO0	Proximity loop.
2	CS1/PS1	I/O	CapSense button/proximity sensor, controls GPO1	Brought out to dual header through a 560-ohm resistor.
3	CS2/GUARD	I/O	CapSense button/guard sensor, controls GPO2	Brought out to dual header through a 560-ohm resistor.
4	CS3	I/O	CapSense button controls GPO3	BTN1 (10-mm diameter).
5	CMOD	I/O	External modulator capacitor. Connect 2.2-nF capacitor	2.2 nF Cmod capacitor (COG type).
6	VCCD	Power	Power. Connect 0.1-uF capacitor	Bypass capacitor of 0.1 uF.
7	VDD	Power	Power	VADJ= 5 V, 3.3 V, or 1.8 V.
8	VSS	Power	Ground	GND
9	CS15/SH/HI	I/O	CapSense button/shield electrode/host interrupt/buzzer output	This pin will be connected to a 6-pin jumper to select between Hash GND for water proofing or host interrupt.
10	CS14/GPO6	I/O	CapSense button/general-purpose output	LED 4 for button 4 (BTN4).
11	CS13/GPO5	I/O	CapSense button/general-purpose output	LED 3 for button 3 (BTN3).
12	CS12/GPO4	I/O	CapSense button/general-purpose output	LED 2 for button 2 (BTN2).
13	CS11/GPO3	I/O	CapSense button/general-purpose output	LED 1 for button 1 (BTN1).
14	CS10/GPO2	I/O	CapSense button/general-purpose output	Brought out to dual header through a 560-ohm resistor.
15	CS9/GPO1	I/O	CapSense button/general-purpose output	Brought out to dual header through a 560-ohm resistor.
16	CS8/GPO0	I/O	CapSense button/general-purpose output	Proximity LED.
17	CS7	I/O	CapSense button, controls GPO7	Cannot be used because GPO7 is multiplexed with the host interrupt so brought out to a header.
18	CS6	I/O	CapSense button, controls GPO6	BTN4 (11-mm diameter): A long trace option will be provided on this pin.
19	CS5	I/O	CapSense button, controls GPO5	BTN3 (11-mm diameter).
20	CS4	I/O	CapSense button, controls GPO4	BTN2 (10-mm diameter): Button 2 will have a slide switch, which varies the Cp to 10 pF or 15 pF, depending on the position of the switch.
21	I2C	SDA	I^2C data	This pin will be connected to a 3-pin jumper, to choose between the onboard I^2C-USB bridge or external host.
22	I2C	SCL	I^2C clock	This pin will be connected to a 3-pin jumper, to choose between the onboard I^2C-USB bridge or external host.
23	HI/BUZ/GPO7	O	Host interrupt/buzzer output/general-purpose output	This pin will be connected to a 6-pin jumper to select the host interrupt or buzzer.
24	XRES	XRES	External reset	Reset switch and an SIO pin on PSoC 5LP I^2C-USB bridge.

Note: Pins shaded blue are left open; the other pins have been used for some function.

A.3 Bill of Materials

Item	Qty	Reference	Description	Manufacturer	Manufacturer Part No.
1	6	C11,C13,C18,C19,C23,C33	CAP CER 1UF 10V 10% X5R 0603	TDK Corporation	C1608X5R1A105K080AC
2	1	C4	CAP TANT 10UF 16V 10% 1206	AVX	TAJA106K016R
3	1	C5	CAP CER 22UF 10V 20% JB 0805	TDK Corporation	C2012JB1A226M125AB
4	9	C7,C12,C14,C15,C17,C20,C21,C24,C30	CAP CER 0.1UF 10V 10% X5R 0402	Taiyo Yuden	LMK105BJ104KV-F
5	1	C16	CAP 10000PF 16V CERAMIC 0402 SMD	TDK Corporation	C1005X7R1C103K050BA
6	1	C26	CAP, CER, 2200pF, 50V, 5%, C0G, 0805	Murata	GRM2165C1H222JA01D
7	1	C31	CAP CER 15PF 50V 5% NP0 0603	TDK Corporation	C1608C0G1H150J080AA
8	1	C32	CAP CER 10PF 50V 5% NP0 0603	Samsung Electro-Mechanics America, Inc	CL10C100JB8NNNC
9	1	C34	CAP CER 100PF 50V 5% NP0 0402	TDK Corporation	C1005C0G1H101J050BA
10	1	D2	DIO , SCHOTTKY, 20V, 0.5A, SOD-123	Fairchild Semiconductor	MBR0520L
11	3	D6,D7,D8	DIO, SUPPRESSOR ESD 5VDC 0603 SMD	Bourns Inc.	CG0603MLC-05LE
12	6	D9,D10,D11,D12,D13,D14	LED Red CLEAR 1206 REAR MNT SMD	Stanley Electric Co	BR1111R-TR
13	1	D15	LED GREEN CLEAR 1206 REAR MNT SMD	Lite-On Inc	LTST-C230GKT
14	7	R29,R30,R31,R32,R58,R59, R62	RES 330 OHM 1/8W 5% 0805 SMD	Panasonic	ERJ-6GEYJ331V
15	2	R80,R81	RES 330 OHM 1/10W 5% 0402 SMD	Panasonic Electronic Components	ERJ-2GEJ331X
16	10	R49,R50,R51,R52, R74,R75,R76,R77,R78,R79	RES 560 OHM 1/16W 5% 0402 SMD	Yageo Corporation	RC0402JR-07560RL
17	4	R5,R45,R67,R56	RES 0.0 OHM 1/8W 0805 SMD	Panasonic-ECG	ERJ-6GEY0R00V
18	1	R82	RES 0.0 OHM .125W JUMP 0402 SMD	Vishay Dale	CRCW04020000Z0EDHP
19	1	R60	RES 0.0 OHM 1/10W JUMP 0603 SMD	Panasonic Electronic Components	ERJ-3GEY0R00V
20	2	R8,R9	RES 2.2K OHM 1/10W 5% 0603 SMD	Panasonic Electronic Components	ERJ-3GEYJ222V
21	1	R13	RES 100K OHM 1/10W 5% 0402 SMD	Panasonic Electronic Components	ERJ-2GEJ104X
22	2	R26,R27	RES 22 OHM 1/10W 1% 0603 SMD	Panasonic Electronic Components	ERJ-3EKF22R0V
23	3	R37,R39,R70	RES 15K OHM 1/10W 5% 0603 SMD	Panasonic Electronic Components	ERJ-3GEYJ153V
24	2	R73, R83	RES 4.7K OHM 1/10W 5% 0603 SMD	Panasonic Electronic Components	ERJ-3GEYJ472V
25	2	R43,R68	RES, 10K OHM, 1/16W, 1%, 0603, SMD	Yageo	RC0603FR-0710KL
26	4	R38,R40,R46,R69	RES 30K OHM 1/10W 1% 0603 SMD	Panasonic Electronic Components	ERJ-3EKF3002V
27	1	R44	RES 37.4K OHM 1/10W .5% 0603 SMD	Yageo	RT0603DRD0737K4L
28	1	R47	RES 5.49K OHM 1/10W 1% 0603 SMD	Panasonic Electronic Components	ERJ-3EKF5491V
29	1	LS1	BUZZER PIEZO 4KHZ 12.2MM PC MNT	TDK CORPORATION (VA)	PS1240P02BT

Item	Qty	Reference	Description	Manufacturer	Manufacturer Part No.
30	1	F1	PTC Resettable Fuses 15Volts 100Amps	Bourns	MF-MSMF050-2
31	2	J13,J14	HDR, CONN, HEADER, MALE, 2.54mm, 3POS, GOLD, TH	PROTECTRON	P9101-03-12-1
32	2	J1,J4	2.54mm PITCH SINGLE ROW 8POS HEADER, 13mm MATING LENGTH	PROTECTRON	P9101-08-D32-1
33	1	J2	2.54mm PITCH SINGLE ROW 6POS HEADER, 13mm MATING LENGTH	PROTECTRON	P9101-06-D32-1
34	1	J3	2.54mm PITCH SINGLE ROW 10POS HEADER, 13mm MATING LENGTH	PROTECTRON	P9101-10-D32-1
35	2	J11,J12	CONN, HEADER, VERT, SGL ROW, 2POS, GOLD	PROTECTRON	P9101-02-12-1
36	1	J15	CONN, HEADER, VERT, SGL, 6POS, GOLD	PROTECTRON	P9101-06-12-1
37	1	J10	MINI USB RCPT R/A DIP	TE Connectivity	1734510-1
38	1	SW1	SWITCH SLIDE SP3T LOW PROF SMD	Copal Electronics Inc	CUS-13TB
39	1	SW2	SWITCH TACTILE SPST-NO 0.05A 12V	TE Connectivity	FSMRA5JH
40	1	SW3	SWITCH SLIDE DPDT LOW PROF SMD	Copal Electronics Inc	CUS-22TB
41	1	TP7	TP, PC Mini, 0.040" D Black	Keystone Electronics	5001
42	1	U2	IC REG LDO ADJ 0.5A SOT23-5	Micrel Inc	MIC5219YM5 TR
43	1	U4	POLYZEN 5.6V PPTC/ZENER SMD	TE Connectivity	ZEN056V075A48LS
44	1	U1	CY8C5868LTI-LP039, QFN68	Cypress SemiConductor	CY8C5868LTI-LP039
45	1	U3	CY8CMBR3116 -LQXI, 24QFN	Cypress SemiConductor	CY8CMBR3116 -LQXI
46	1	PCB	CY3280-MBR3 PCB (Size: 3 inch x 2.7 inch No of Layers: 4 Impedance Control USB Line Surface Finish: ENIG Solder Mask color: Black Board thickness: 1.6mm)	Cypress SemiConductor	600-60172-01 Rev 1
No Load Components					
1	9	R48, R54,R55,R63, R66,R71,R72,R84,R85	RES 0.0 OHM 1/8W 0805 SMD	Panasonic-ECG	ERJ-6GEY0R00V
2	1	R53	RES, 10K OHM, 1/16W, 1%, 0603, SMD	Yageo	RC0603FR-0710KL
3	2	R41,R57	RES 4.7K OHM 1/10W 5% 0603 SMD	Panasonic-ECG	ERJ-3GEYJ472V
4	1	C35	CAP CER 100PF 50V 5% NP0 0402	TDK Corporation	C1005C0G1H101J050BA
5	3	TP2,TP3,TP4	TP, PC Mini, 0.040" D Red	Keystone Electronics	5000
6	1	TP5	TP, PC Mini, 0.040" D Black	Keystone Electronics	5001

A.4 Regulatory Compliance Information

The CY3280-MBR3 EVK has been tested and verified to comply with the following electromagnetic compatibility (EMC) regulations.

- EN 55022:2010 Class A – Emissions
- EN 55024:2010 - Immunity

Revision History

CY3280-MBR3 Evaluation Kit User Guide Revision History

Document Title: CY3280-MBR3 Evaluation Kit User Guide **Document Number: 001-89905**			
Revision	**Issue Date**	**Origin of Change**	**Description of Change**
**	02/18/2014	SASH	New kit guide
*A	02/21/2014	SASH	Updated EZ-Click images
*B	03/10/2014	PAVA	Updates to include support for externally regulated operating mode at 1.8 V

AMEYA360
Components Supply Platform

Authorized Distribution Brand :

Website :

Welcome to visit www.ameya360.com

Contact Us :

- ## Address :

401 Building No.5, JiuGe Business Center, Lane 2301, Yishan Rd
Minhang District, Shanghai , China

- ## Sales :

Direct +86 (21) 6401-6692

Email amall@ameya360.com

QQ 800077892

Skype ameyasales1 ameyasales2

- ## Customer Service :

Email service@ameya360.com

- ## Partnership :

Tel +86 (21) 64016692-8333

Email mkt@ameya360.com