PCIExpress Server Dual Slot Hot Plug Controller

Check for Samples: TPS2363

FEATURES

- **Meets PCIExpress™ Hot Plug Requirements**
- **Programmable 12-V Current Limit**
- **Inrush Current Limiting**
- **SMBus**
- **Direct Mode**
- **VAUX Internal FET**
- **General Purpose Inputs**
- **Available in a 48-Pin TQFP Package**
- **MIC2592B Pin Compatible with Additional Features**

DESCRIPTION

The TPS2363 is a dual-slot PCIExpress hot plug controller with SMBus control and monitoring functions. There are sense resistor programmable current limits for the 3.3-V and 12-V supply.

The TPS2363 has one internal FET channel for AUX and two external FET channels for 3.3-V and 12-V per slot.

The TPS2363PFB is in 48-pin TQFP package.

Application Diagram

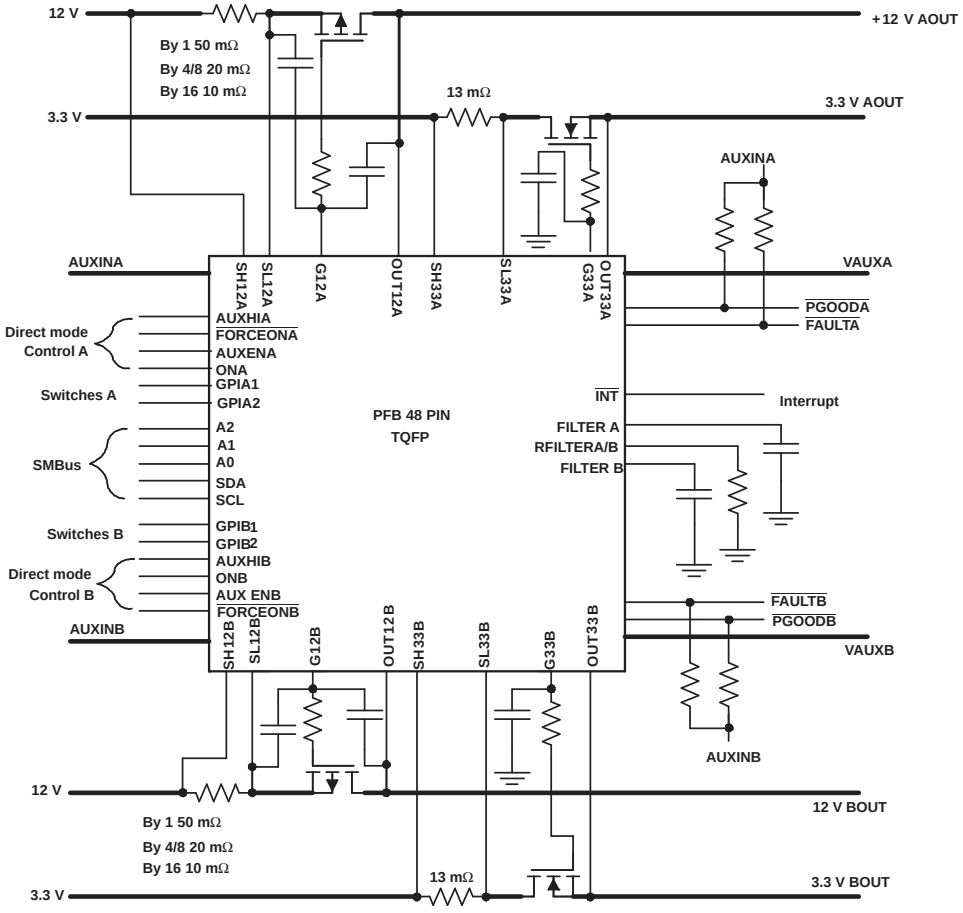

Please be aware that an important notice concerning availability, standard warranty, and use in critical applications of Texas Instruments semiconductor products and disclaimers thereto appears at the end of this data sheet.

PCIExpress is a trademark of Texas Instruments.

PRODUCTION DATA information is current as of publication date. Products conform to specifications per the terms of the Texas Instruments standard warranty. Production processing does not necessarily include testing of all parameters.

Copyright © 2006–2010, Texas Instruments Incorporated

Application Diagram (continued)

The TPS2363 has bleed-down circuits to discharge the module before it is removed, when the voltages are below the low comparator threshold, slot PWROFF will be set indicating it is safe to remove the module. This is available over the SMBus.

Gate capacitors are used to set the rise time, this allows soft turn on of the slot avoiding power glitches.

The TPS2363 can be operated in direct mode, which does not use the SMBus.

The TPS2363PFB without the A/D converter in a 48-pin package is a drop in replacement for the competitive parts but with certain improvements.

Improvements Over the Competition

The function register is exclusive to the TPS2363 to provide additional functionality.

- VAUXA/B programmable to higher current, the ability to step the current to 800 mA. Several add-in modules in the past have not been able to stay under the allowed current in the PCI standards.
- AUX current limit is more accurate; TPS2363 400 mA to 750 mA vs MIC2592B 375 mA to 1.35 A.
- 2 Inputs for slot with debounce, each slot normally has a switch and attention button.
- The ability to turn off current limit with the SMBus, some applications prefer the circuit breaker and do not want current limit.
- VAUX independent of main power.
- Power off slot information with the SMBus, this shows that all the voltages on the module are below 100 mV and the module can be removed safely.
- Tighter fault timer control.
- AUXENA/B is level sensitive, not edge triggered.

ORDERING INFORMATION

T_A	FAST TRIP	AUXHI PINS 18 and 19	PINS	PACKAGED DEVICES(1)
-40°C to 85°C	100 mV	Yes	48 PFB	TPS2363PFB

(1) Parts are shipped in trays unless an R is added to the end of the part number for tape and reel.

Copyright © 2006–2010, Texas Instruments Incorporated

ABSOLUTE MAXIMUM RATINGS

Over operating free-air temperature range (unless otherwise noted) (1)

PARAMETER	VALUE	UNIT
Supply 12 V, SH12A/B	0 to 15	V
Supply 3.3 V & SH33A/B, AUXINA/B	0 to 5	
Logic input/output	-0.5 to 5	
VAUXA/B output voltage	0 to 5	
VAUXA/B output current	1.4	A
$\overline{\text{FAULTA/B}}$, $\overline{\text{PGOODA/B}}$, $\overline{\text{INT}}$ sink current	10	mA
SDA sink current	10	
Operating junction temperature	-40 to 125	°C
Storage temperature	-65 to 150	
LEAD temperature soldering	260	

(1) Stresses beyond those listed under “absolute maximum ratings” may cause permanent damage to the device. These are stress ratings only, and functional operation of the device at these or any other conditions beyond those indicated under “recommended operating conditions” is not implied. Exposure to absolute-maximum-rated conditions for extended periods may affect device reliability.

ELECTROSTATIC DISCHARGE (ESD) PROTECTION

TEST METHOD		MIN	UNIT
HBM	Human body model	2	kV
CDM	Charged device model	1	

DISSIPATION RATINGS

PACKAGE	$T_A \le 25°C$ POWER RATING	DERATING FACTOR ABOVE $T_A = 25°C$	$T_A = 70°C$ POWER RATING	$T_A = 85°C$ POWER RATING
PFB(48 TQFP)	1025.6 mW	10.256 mW/°C	564.1mW	410.3 mW

RECOMMENDED OPERATING CONDITIONS

over operating free-air temperature range (unless otherwise noted)

PARAMETER		MIN	NOM	MAX	UNIT
	12 V input voltage range, SH12A/B	10.8	12	13.2	V
	AUX and 3.3 V input voltage range, SH33A/B, AUXINA/B	3.0	3.3	3.6	
	VAUXA/B output current, PCI standard			375	mA
T_J	Operating junction temperature range	-40		125	°C
T_A	Operating ambient temperature range	-40		85	

Copyright © 2006–2010, Texas Instruments Incorporated

ELECTRICAL CHARACTERISTICS

Supply voltages; SH33A/B & AUXINA/B = 3.0 V to 3.6 V, SH12A/B = 10.8 V to 13.2 V, T_A = -40°C to 85°C, RFILTER = open, all outputs are not loaded (unless otherwise specified). (1)

PARAMETER		TEST CONDITIONS	MIN	TYP	MAX	UNIT
PCIExpress 12-V Supply Gate Controller						
	12-V voltage, SH12A/B		10.8		13.2	V
	12-V supply current, SH12A/B, per slot	ONA/B = high, (No load)			1	mA
		ONA/B = low, disabled main supply			0.5	
		Leakage, VAUX = 3.3 V , SH33A/B and SH12A/B = 0 V			1	µA
	SL12A/B input current			0.35		
	12-V gate voltage, G12A/B	ONA/B = high	0		1	V
	12-V gate sink current	ONA/B = high, G12A/B = SH12A/B	15	25	35	µA
	12-V gate source current	ONA/B = High, G12A/B = SH12A/B-2.5 V, during a fault condition	20			mA
	Current limit threshold	Current limit	45	50	55	mV
	Fast trip threshold	Fast trip	90	100	110	
	UVLO	Increasing	8	9	10	V
		Hysteresis		180		mV
	$\overline{\text{PGOOD}}$	Increasing	10.2	10.5	10.8	V
		Hysteresis		50		mV
	Bleed down resistance	ONA/B = LOW, OUT12A/B = 6.0 V		1600		Ω
	low comparator threshold		0.075	0.1	0.15	V
PCIExpress 3.3-V Gate Control						
	3.3-V voltage, SH33A/B	PCIExpress limits, not device limits	3.0		3.6	V
	3.3-V supply current, SH33A/B, per slot	ONA/B = high			0.2	mA
		ONA/B = low, Disabled main supply			0.2	
		Leakage, AUXINA/B = 3.3 V, SH33A/B and SH12A/B = 0 V			1	µA
	SL33A/B input current			0.35		
	3.3-V gate voltage, G33A/B	ONA/B = high, capacitive load only	SH12A/B – 1		SH12A/B	V
	3.3-V gate sink current	ONA/B = high, G33A/B = 2.5 V, on a fault condition.	50			mA
	+3.3 volt gate source current	ONA/B = high, G33A/B = SH12A/B	15	25	35	µA
	Current limit threshold	Current limit	45	50	55	mV
	Fast trip threshold	Fast trip	90	100	110	
	UVLO	Increasing	2.2	2.5	2.75	V
		Hysteresis		180		mV
	$\overline{\text{PGOOD}}$	Increasing	2.7	2.8	2.9	V
		Hysteresis		50		mV
	Bleed down resistance	ONA/B = low, OUT33A/B = 1.65 V		150		Ω
	low comparator threshold		0.075	0.1	0.15	V

(1) Current is the absolute value of current as some addresses are pulled high, while others are pulled low.

Copyright © 2006–2010, Texas Instruments Incorporated

ELECTRICAL CHARACTERISTICS (continued)

Supply voltages; SH33A/B & AUXINA/B = 3.0 V to 3.6 V, SH12A/B = 10.8 V to 13.2 V, T_A = -40°C to 85°C, RFILTER = open, all outputs are not loaded (unless otherwise specified). (1)

PARAMETER		TEST CONDITIONS	MIN	TYP	MAX	UNIT
PCIExpress AUX						
	AUXINA/B voltage		3.0		3.6	V
	AUXINA/B supply current	AUXENA/B = high, (no load), ONA/B = high			1	mA
		AUXENA/B = high, (no load), ONA/B = low			1	
		AUXENA/B = low, ONA/B = low			1	
	VAUXA/B on resistance	AUXENA/B = high, I(VAUXA/B) = 375 mA			400	mΩ
	Current llmit	Default current limit, VAUXA/B = 1 V	400		750	mA
		VAUXA/B set to high current limit (SMBus) or (pins 18 & 19), VAUXA/B = 1 V	0.8		1.4	A
	UVLO	Increasing	2.8	2.9	3.0	V
		Hysteresis		50		mV
	$\overline{\text{PGOOD}}$	Increasing	2.7	2.8	2.9	V
		Hysteresis		50		mV
	bleed down resistance	AUXENA/B = low, VAUXA/B = 1.65 V		400		Ω
	low comparator threshold		0.075	0.1	0.15	V
	Off-state output offset voltage	AUXENA/B = low, T_J = 125°C			50	mV
Timing						
	V_{FILTER} (CFILTERA/B)	Threshold voltage	1.2	1.25	1.3	V
	I_{FILTER} (CFILTERA/B)	Filter charging current, when the voltage across the sense resistor is greater than the threshold limit	2.1	2.5	3.1	μA
		Filter discharging current, 1.5 V	1			mA
	R_{FILTER}		108.8	110	111.2	kΩ
	Scaling factor SF	The voltage across the sense resistor is greater than the threshold limit	4.5	5	5.5	V
	Fast trip	(SH12A/B - SL12A/B = 110 mV) or (SH33A/B – SL33A/B = 110 mV)		200	500	ns
	$\overline{\text{PGOOD}}$ response to output UV	12 V at 9.2 V, 3.3 V and VAUXA/B at 2.5 V		100	200	
	POR, power on reset	After AUXINA/B becomes valid		250		μs
	GPIA/Bx, debounce	Designed for switch contact closure		5		ms

Copyright © 2006–2010, Texas Instruments Incorporated

ELECTRICAL CHARACTERISTICS (continued)

Supply voltages; SH33A/B & AUXINA/B = 3.0 V to 3.6 V, SH12A/B = 10.8 V to 13.2 V, T_A = -40°C to 85°C, RFILTER = open, all outputs are not loaded (unless otherwise specified). (1)

PARAMETER		TEST CONDITIONS	MIN	TYP	MAX	UNIT
SCL, SDA Address, GPI, and enable logic						
V_{IL}	Input Low voltage (SDA, SCL, A0, A1, A2, ONA/B, FORCEONA/B, AUXENA/B, GPIA/Bx)				0.8	V
V_{IH}	Input High voltage (SDA, SCL, A0, A1, A2, ONA/B, FORCEONA/B, AUXENA/B, GPIA/Bx)		2.0			
I_{IL}	SCL, ONA/B, AUXENA/B, FORCEONA/B, input leakage current	V_{PIN} = AUXINA/B or 0 V			±5	µA
	Address pull up to AUXINA/B (A0 - A2)			40		kΩ
	GPIA/Bx input pull down			100		
V_{OL}	Low-level output voltage FAULTA/B, PGOODA/B, INT, SDA	IL = 4 mA		0.2	0.4	V
$I_{LKG(off)}$	FAULTA/B, PGOODA/B, INT, SDA off-state leakage current	V_{PIN} = AUXINA/B			±5	µA
SMBus Timing						
	SCL (Clock) period		2.5			µs
	Data in setup to SCL high		100			ns
	Data out stable after SCL low		300			
	Data low setup time to SCL low		100			
	Data high hold time to SCL high		100			
Thermal Shutdown						
	Thermal Shutdown	TSHUT1, rising		140		°C
		Hysteresis		10		
		TSHUT2, rising		160		

Copyright © 2006–2010, Texas Instruments Incorporated

DEVICE INFORMATION

TERMINAL FUNCTIONS

TERMINAL		NO.	I/O	DESCRIPTION
NAME				
TPS2363	MIC2592B			
$\overline{\text{FAULTA/B}}$	/FAULTA/B	1/36	O	Active low, fault output for the slot (filtered). $\overline{\text{FAULTA/B}}$ indicates an over-current, undervoltage, or over temperature event occurred on either the AUX or the main supplies. AUXENA/B must be disabled to reset an AUX fault. ONA/B must be disabled to reset a main fault. This open drain output must be pulled up to AUXINA/B with a 100-kΩ resistor.
FILTERA/B	FILTERA/B	2/35	I	An external capacitor to ground sets the time allowed for the fault event (MAIN or AUX) to continue before turning off the SlotA/B main power. The Fault Timer section discusses capacitor selection.
G12A/B	12VGATEA/B	3/34	O	Gate drive pin for the 12-V P-channel FET. A capacitor on this pin to the OUT12A/B pin sets the slew rate in order to limit the inrush current. See the inrush section that discusses gate capacitor selection.
GPIA/B1	GPI_A0/B0	4/38	I	General purpose input, filtered for direct connection to a mechanical switch. The condition of this input is read through the common status register of the SMBus. If not used connect this pin to ground. These pins can be used for switch (module inserted) or attention button. These inputs have an internal 100 kΩ pull down.
SH12A/B	12VINA/B	5/32	I	12-V supply input and high side of the sense resistor. These pins and the associated sense resistors require some attention to layout. See the layout considerations section for sense resistor layout. This pin requires 0.1-μF bypass capacitor to ground
$\overline{\text{PGOODA/B}}$	/PWRGDA/B	6/31	O	Active low output indicates power is good on all voltages for this slot. This open drain output must be pulled up to AUXINA/B with a 100-kΩ resistor.
GPIA/B2	NC	7/30	I	General purpose input, filtered for direct connection to a mechanical switch, the condition of this input is read through the common status register of the SMBus. These pins can be used for switch (module inserted) or attention button. These GPIs are available only on the TPS2363, if not used, leave as no connection.
SL12A/B	12VSENSEA/B	8/29	I	Low side of the sense resistor for 12-V supply. When the voltage across the sense resistor exceeds the current limit threshold, the slot is in an over current condition. Use a Kelvin connection for the sense resistor wiring. See the layout considerations section.
$\overline{\text{FORCEONA/B}}$	/FORCE_ONA/B	9/28	I	Active low, forces the channel on even when there is a fault for diagnostics. This can be disabled by the SMBus FORCEON INHIB bits. Thermal shutdown overrides the $\overline{\text{FORCEONA/B}}$. The SMBus STATA/B registers contains the state of SlotA/B.
OUT12A/B	12VOUTA/B	10/27	I/O	12-V channel output pin is used to monitor the SlotA/B voltage for power good. When the main power is turned off, there is a 1.2-kΩ bleed-down circuit, when all the voltages are below 100 mV slot power off can be read from the SMBus.
AUXINA/B	VSTBYA/B	11/26	I	3.3-V auxiliary power for PCIExpress applications, SMBus and internal logic. If there is no AUX supply AUXINA/B must be tied to the 3.3-V supply. This pin requires 0.1-μF bypass capacitor to ground.
SH33A/B	3VINA/B	12/25	I	3.3V supply input and high side of the sense resistor, these pins and the associated sense resistors require some attention to layout. See layout considerations section for sense resistor layout. This pin requires 0.1-μF bypass capacitor to ground.
SL33A/B	3VSENSEA/B	13/24	I	Low side of the sense resistor for 3.3-V supply. When the voltage across the sense resistor exceeds the current limit threshold, the slot is in an over current condition. Use a Kelvin connection for the sense resistor wiring. See the layout considerations section.
G33A/B	3VGATEA/B	14/23	O	Gate drive pin for the 3.3-V N-channel FET. A capacitor on this pin to ground sets the slew rate in order to limit the inrush current. The Inrush Section discusses capacitor selection.
VAUXA/B	VAUXA/B	15/22	O	VAUX output to SlotA/B.

Copyright © 2006–2010, Texas Instruments Incorporated

TERMINAL FUNCTIONS (continued)

TERMINAL		NO.	I/O	DESCRIPTION
NAME				
TPS2363	MIC2592B			
OUT33A/B	3VOUTA/B	16/21	I/O	3.3-V channel output, used to monitor the SlotA/B voltage for power good. When the main power is turned off, there is a 1.2-kΩ pull-down, bleed-down circuit, when all the voltages are below 100 mV slot power off can be read from the SMBus.
GND	GND	17, 46, 33		Ground
AUXHIA/B	N/C	18, 19	I	AUXHIA/B are used to select high AUX current, 800 mA. These pins are pulled up to AUXINA/B with a 10-kΩ maximum resistor for 800 mA selection. It has an internal 40-kΩ pull-down resistor so it may be NC or connected to ground for the default 400 mA VAUXA/B. The AUX high current feature is only on the TPS2363.
RFILTER A&B	RFILTER [A&B]	20	I	A 110-kΩ resistor from this pin to ground improves fault timer accuracy. See fault timer section for more information.
$\overline{\text{INT}}$	/INT	37	O	$\overline{\text{INT}}$ is an open drain output, active low when a fault occurs. The SMBus interrupt mask disables the output. $\overline{\text{INT}}$ is cleared through reset of the status registers. This is described in the SMBus programming section. This pin should be pulled up 3.3-V or AUXINA/B through an external 10-kΩ resistor at the end of the bus.
A0, A1, A2	A0, A1, A2	41/40/39	I	SMBus address selection inputs. These inputs are internally pulled up to 3.3-V or AUXINA/B with a 40-kΩ resistor; leave the pins open to program a logic one or connect to ground for a zero. The controller reads the address bits at initialization only.
AUXENA/B	AUXENA/B	45/42	I	This active high signal turns on the VAUX slot voltage. Taking this signal low clears a fault on the slot caused by the VAUX voltages. Connect these pins to ground when using the SMBus interface for control.
ONA/B	ONA/B	44/43	I	This active high signal turned on the main slot voltages. Taking this signal low clears a fault on the slot caused by the main voltages. Connect these pins to ground when using the SMBus interface for control.
SCL	SCL	47	I	SMBus clock input. This pin should be pulled up 3.3 V or AUXIN through an external 10-kΩ resistor at the end of the bus.
SDA	SDA	48	I/O	SMBus data in/output and address input. This pin should be pulled up 3.3-V or AUXIN through an external 10-kΩ resistor at the end of the bus.

Copyright © 2006–2010, Texas Instruments Incorporated

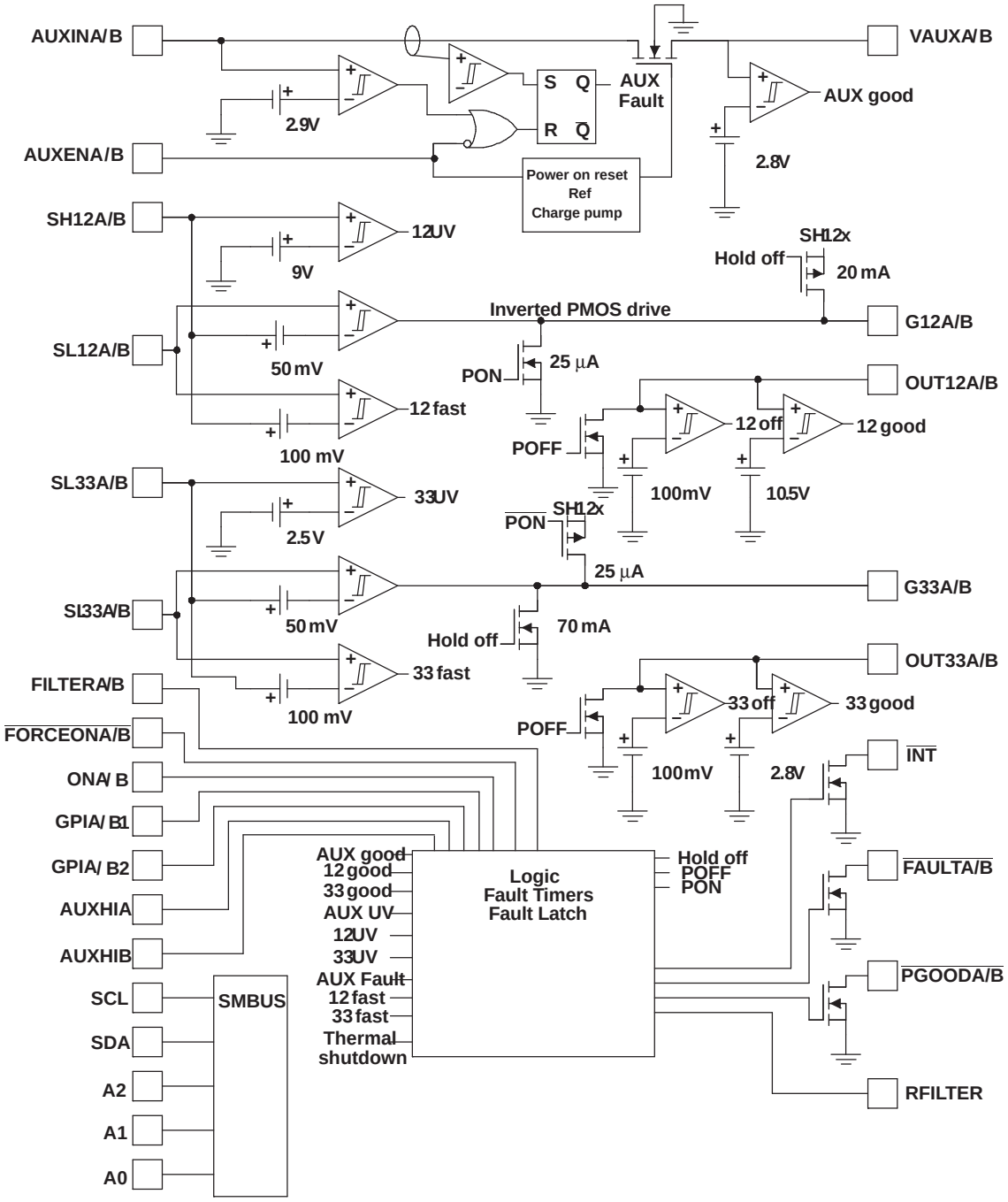
AUXINA/B
AUXENA/B
SH12A/B
SL12A/B
SL33A/B
SL33A/B
FILTERA/B
FORCEONA/B
ONA/B
GPIA/B1
GPIA/B2
AUXHIA
AUXHIB
SCL
SDA
A2
A1
A0
SMBUS
2.9V
9V
50 mV
100 mV
2.5V
50 mV
100 mV
12UV
33UV
12 fast
33 fast
S Q
R Q
AUX Fault
Power on reset
Ref
Charge pump
2.8V
AUX good
VAUXA/B
Hold off
SH12x
20 mA
G12A/B
Inverted PMOS drive
PON
25 µA
OUT12A/B
POFF
12 off
12 good
100mV
10.5V
PON
SH12x
25 µA
G33A/B
Hold off
70 mA
OUT33A/B
POFF
33 off
33 good
100mV
2.8V
INT
FAULTA/B
PGOODA/B
RFILTER
AUX good
12 good
33 good
AUX UV
12UV
33UV
AUX Fault
12 fast
33 fast
Thermal shutdown
Logic
Fault Timers
Fault Latch
Hold off
POFF
PON

REFERENCE INFORMATION

PCIExpress CEM (Card Electromechanical Specification) Standard

Table 1. Power Supply Rail Requirements

POWER RAIL	x1 CONNECTOR	x4/x8 CONNECTOR	x16 CONNECTOR
3.3 V			
Voltage tolerance	±9% (max)	±9% (max)	±9% (max)
Supply current	3.0 A (max)	3.0 A (max)	3.0 A (max)
Capacitive load	1000 µF (max)	1000 µF (max)	1000 µF (max)
12 V			
Voltage tolerance	±8%	±8%	±8%
Supply current	0.5 A	2.1 A (max)	4.4 / 5.5 A (max)
Capacitive load	300 µF (max)	1000 µF (max)	2000 µF (max)
3.3 VAUX			
Voltage tolerance	±9% (max)	±9% (max)	±9% (max)
Supply current	375 mA (max)	375 mA (max)	375 mA (max)
Wakeup enabled	20 mA (max)	20 mA (max)	20 mA (max)
Non-wakeup enabled			
Capacitive load	150 µF (max)	150 µF (max)	150 µF (max)

Table 2. Add-in Card Power Dissipation(1) (2) (3) (4)

	X1		x4/x8	x16	
Standard height	10 W[1] (max)	25 W[1] (max)	25 W (max)	25 W[2] (max)	75 W (max)(5)
Low profile card3	10 W (max)		10 W (max)	25 W (max)	

(1) A standard height x1 add-in card intended for desktop applications is limited in length to a half-length add-in card and 10 W maximum power dissipation. A standard height x1 add-in card intended for server I/O applications with 25 W maximum power dissipation must be greater than or equal to 177.80 mm (7.0 inches) in length, but must not exceed a full-length add-in card. See PCIExpress CEM Table 6-1 for add-in card size definitions. The same server I/O add-in card must, at initial power-up, not exceed 10 W of power dissipation, until configured as a high power device, at which time it must not exceed 25 W of power dissipation. Refer to Chapter 6 of the PCI Express Base Specification for information on the power configuration mechanism.

(2) A standard height x16 add-in card intended for server I/O applications must limit its power dissipation to 25 W. A standard height x16 add-in card intended for graphics applications must, at initial power-up, not exceed 25 W of power dissipation, until configured as a high power device, at which time it must not exceed 60 / 75 W of power dissipation. Refer to Chapter 6 of the PCI Express Base Specification for information on the power configuration mechanism.

(3) All low profile add-in cards are limited in length to a half-length add-in card and must not exceed the power dissipation values shown in Add-in Card Power Dissipation Table.

(4) A x16 graphics card is limited to 60/75 W. The 60/75 W maximum can be drawn via the combination of 12-V and 3.3-V rails, but each rail draw is limited as defined in Power Supply Rail Requirements Table, and the sum of the draw on the two rails cannot exceed 60/75 W.

(5) 150 W, x16 graphics 150 W ATX requires a second connector, each connector must be current limited to 75 W to insure that when a fault occurs it will not damage the connectors. The TPS2490 is a good 12-V hot swap controller for the second cable.

Copyright © 2006–2010, Texas Instruments Incorporated

APPLICATION INFORMATION

Power On Reset

AUXINA/B is the logic voltage supply. When AUXINA/B voltage is greater than the under voltage lock out (UVLO) the TPS2363 will start a reset. This clears all the registers and holds off all the SlotA/B voltages. Initialization takes less than 250 µs after the voltage on AUXINA/B is above the UVLO. A power glitch on AUXINA/B causes a TPS2363 reset. After reset, the main outputs are off even if the ONA/B inputs are active. The TPS2363 powers up with the $\overline{\text{FAULTA/B}}$ output clear.

The AUXENA/B input to the TPS2363 is level sensitive to avoid race conditions at power-up. If AUNXENA/B is active when the TPS2363 powers up VAUXA/B turns on and the $\overline{\text{FAULTA/B}}$ output powers up clear.

If $\overline{\text{FORCEONA/B}}$ is active, the VAUXA/B and main slot power outputs is active after reset.

AUXINA/B should be powered first, then power to 12 V and 3.3 V. If AUXINA/B and 3.3 V are the same supply, they can be powered up together.

If VAUXA/B is not used on the system, AUXINA/B must be tied to 3.3 V at the circuit board 3.3-V power plane.

Operating modes

The TPS2363 can be operated in one of two control modes. Direct mode, uses ONA/B and AUXENA/B to control slot power and SMBus mode uses the control registers in the SMBus. The SMBus can be used in direct mode to monitor status, while the supplies are controlled with ONA/B and AUXENA/B. When in direct mode the control register bits can not be written in the SMBus or the TPS2363 switchs to SMBus mode.

Table 3. MODE- PIN CONNECTION

MODE	SIGNAL	CONNECTION
SMBus	AUXENA/B	GND
	ONA/B	
	$\overline{\text{FORCEONA/B}}$	100 kΩ pull up to VAUXINA/B
DIRECT (if the SMBus is not used to read status)	A0	GND
	A1	
	A2	
	SCL	10 kΩ pull up to VAUXINA/B
	SDA	

- If the SMBus and $\overline{\text{INT}}$ connects to multiple devices, the termination should be at the end of the bus and it should be a 10-kΩ resistor pulling up to 3.3 V or AUXIN depending on the application.
- If the SMBus and $\overline{\text{INT}}$ is a short point to point connection a 100 kΩ pull up to 3.3 V or AUXIN can be used.

Copyright © 2006–2010, Texas Instruments Incorporated

System Operation

The TPS2363 hot plug controller allows for insertion and removal of PCIExpress cards into a running system with the slot powered off. The switch closure when the module is inserted starts the sequence. A GPI pin can be used for the switch input. VAUXA/B is enabled turning on the 3.3-V VAUXA/B supply with the internal FET. VAUXA/B is current limited to 400 mA by default, the PCIExpress standard is 375 mA maximum. Since some modules are not compliant and draw higher current than the standard, the VAUXA/B current limit can be set through the SMBus to 800 mA minimum or in direct mode using pins 18 and 19. The fault timer turns off VAUXA/B if the output is above the maximum current limit for the user defined fault time. Next the system turns on the main power to the slot. The main power turns on at a controlled rate regulated by the gate capacitors sized for turn on to limit inrush current. Note that the 12-V current rating is different for card slot types (x1, x8, x16). Three current limit resistors are recommended for 12 V, one resistor will program the current for each type of slot. PGOOD asserts, completing the sequence when the voltage is above the output under voltage threshold.

Module removal is normally indicated by pushing the attention button, one of the GPI pins can be used for attention. The system stops activity on the module, resets the module, then turns off the slot power using the ONA/B and AUXENA/B or the SMBUS. The TPS2363 has bleed down circuits and monitors the voltage, when the voltage is below 100 mV the power off signal can be read from the SMBus. An LED is on when the module is on. It flashes during power down and turns off when the module is safe to remove.

VAUXA/B Current Limit

The standard VAUX output is 400 mA maximum to comply with the PCIExpress Specification. The TPS2363 can be programmed via SMBus to output 800 mA for non-compliant add-in-modules. The SMBus function register bits may select high or low current settings dynamically. See the programming sections for function register bit definitions.

When AUXHIA/B, pins 18 and 19, are either NC or grounded, the AUX output is the default 400 mA. When pulled up to VAUXIA/B by a 10-kΩ maximum resistor, the VAUXA/B output enters the high current mode. The SMBus function register can control the maximum VAUXA/B output current. If the AUXHIA/B pins are pulled high, the SMBus function register cannot set the VAUXA/B output into the low current setting.

AUXHIA/B is useful for direct mode operation where it is desired to enable the high operating current mode without using the SMBus. The AUXHIA/B pins may be activated though an FPGA or other logic if a hard wired connection is restrictive.

Fault Definition

A fault condition is defined by any one or more of the following events:

1. Main power, 12 V and 3.3 V, is commanded on AND either or both SH12A/B and SH33A/B, are less than specification minimum (UVLO).
2. Either or both main power OR VAUXA/B is in over current AND the fault timer completed.
3. Either or both main power OR VAUXA/B is in over current AND the die temperature exceeds TSHUT1.
4. Fast over-current is detected.
5. Die temperature exceeds TSHUT2.

In direct mode, the $\overline{\text{FAULTA/B}}$ pin is active and the $\overline{\text{FAULTA/B}}$ bit is set in the SMBus STATA/B register.

In SMBus mode control, The $\overline{\text{FAULTA/B}}$ signal pin is false and the $\overline{\text{FAULTA/B}}$ bit in the SMBus STATA/B register is inactive. Fault conditions, VAUXFA/B, 12VFA/B, 3VFA/B are read from the SMBus STATA/B and common status registers and UV_INT from the common status registers.

Copyright © 2006–2010, Texas Instruments Incorporated

Fault

Faults can occur on any of the input supplies, 3.3-V VAUX (VAUXINA/B), 3.3-V (SH33H), and 12-V (SH12A/B). These inputs are monitored for under-voltage and issue a $\overline{\text{FAULTA/B}}$ if the power segment is commanded on when it is out of range. VAUXINA/B UVLO causes a power on reset that clears the $\overline{\text{FAULTA/B}}$.

The SlotA/B voltages (hot plug output voltages) are also monitored for under-voltage. The first indication of a slot fault is normally when $\overline{\text{PGOODA/B}}$ de-asserting because the output voltage is below the threshold when the controller starts to current limit. If the current limit is disabled, the $\overline{\text{FAULT}}$ will be the first indication. Figure 1 shows the threshold for $\overline{\text{PGOOD}}$.

If the fault is above the under-voltage but an over-current condition exists, the $\overline{\text{FAULTA/B}}$ active will be the first indication. Figure 2 shows a normal over current trip.

The TPS2363 will current limit the output to the slot and continue for the user defined fault time. If the fault persists, TPS2363 turns off the SlotA/B power and sets the $\overline{\text{FAULTA/B}}$ output. The current limit can be disabled by the SMBus. The $\overline{\text{FAULTA/B}}$ is reset by turning off the AUXENA/B or ONA/B pin in direct mode. The SMBus can be used to read the fault information. The slot status byte is defined in the SMBus Register Information Section, register STATA/B.

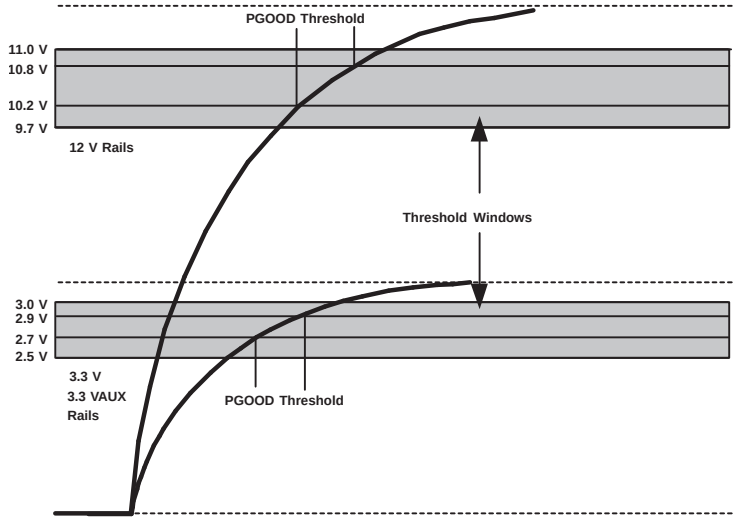

Figure 1. $\overline{\text{PGOOD}}$ Threshold, Grey Area is the PCIExpress CEM 1.1 Standard

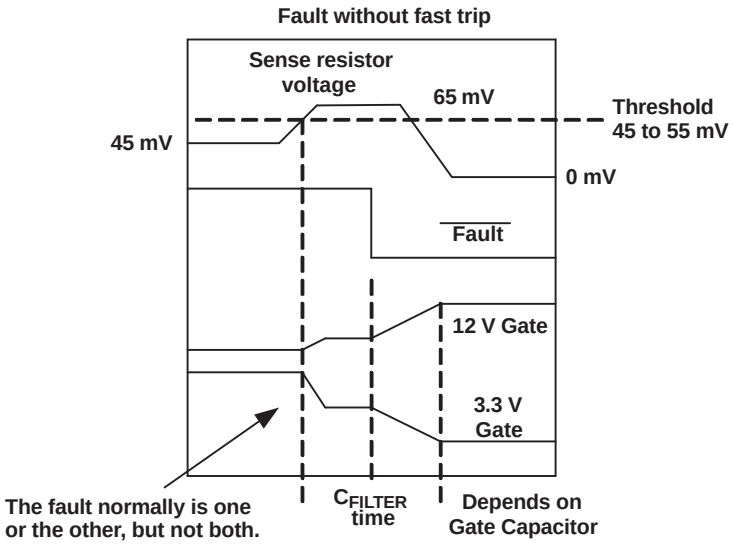

Figure 2. Fault Without Fast Trip

Copyright © 2006–2010, Texas Instruments Incorporated

Fault Timer

To avoid nuisance trips, the turn off time of the main power supplies and AUX in a normal over-current event is controlled by a fault timer. The over current comparator's response time, t_{FLT}, is user selectable and set by external capacitors, one for each channel. Connect the capacitor from FILTERA/B to ground. The fault timer capacitor, $C_{FILTERA/B}$, is calculated by the following equation:

$$C_{FILTER} = \frac{\left(t_{FLT} \times I_{FILTER}\right)}{\left(V_{FILTER} \times 1000\right)}$$

Using the full range of V_{FILTER} and I_{FILTER} given in the Timing Parameters section, C_{FILTER} and the associated fault time can vary up to 60% without component tolerances. For increased accuracy of the fault timer, connect a 110-kΩ resistor from pin $R_{FILTERA/B}$ to ground. Recalculate the $C_{FILTERA/B}$ by the following equation:

$$C_{FILTER} = \frac{t_{FLT}}{\left(R_{FILTER} \times SF\right)}$$

Where R_{FILTER} is the 110-kΩ 1% resistor and SF is the scaling factor in the Timing Parameters section. This technique is accurate to less than 22%, apart from component tolerances.

Competitive parts based on the published datasheet calculate to 200% without the resistor and 27% with the resistor.

Current Limit

A current limit hot plug controller protects the system against over loads and glitches to the backplane power rails by limiting the amount of current that a module can draw. When the module has been in current limit for the fault time then the circuit opens. If the fault goes away before the fault time expires the module goes back to the normal running mode. The disadvantage is the voltage on the module can drop during the current limit, and can leave the logic on the module in a unknown state or hung state. The module may have to be reset or the power cycled to the module to reset the logic.

Figure 3 shows the module turn on using current limit, when current limiting is used the fault timer is typically set for a longer period than circuit breaker. It takes longer to charge up the capacitors when the current is limited.

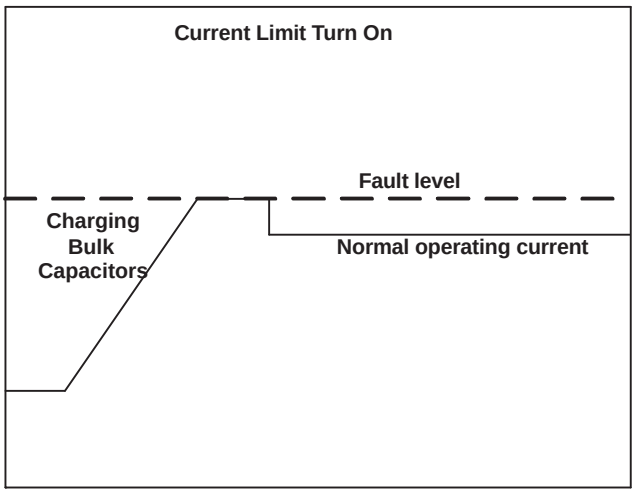

Figure 3. Hot Plug Current Limit Turn ON

Copyright © 2006–2010, Texas Instruments Incorporated

Circuit Breaker

Circuit breaker control does not protect the system from glitches on a fault. The backplane and power system must be designed for a higher current level. The peak current is only limited by the $R_{DS(on)}$ of the power FET used for the hot plug. When a fault occurs there is no current limit, the fault timer controls when power is turned off to the module. The fault time is typically set in the 10 ms range. The high current of a fault can reduce the voltage on the backplane causing the system or other boards to go to an unknown state, the system may have to be reset on a fault or power cycled. A fast trip mode is active if not disabled by the SMBus. When the current draw is much higher than the fault current setting, the output is turned off immediately without waiting for the fault timer. This reduces the chance of voltage glitches that leave the system or other modules in an unknown state.

Figure 4 shows the turn on using circuit breaker, the current goes beyond the fault level as the current ramps, then drops back when the capacitors are charged.

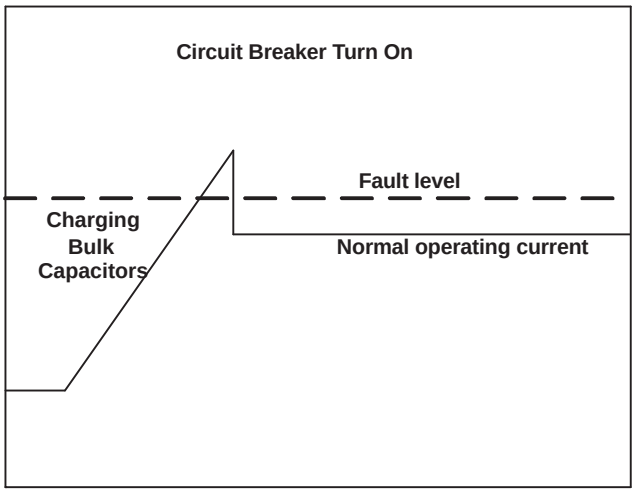

Figure 4. Hot Plug Circuit Breaker Turn On

Fast Trip

Fast trip, shown in Figure 5, normally allows twice the fault current and allows a high current fault for 100 ns, if the fault setting is 6 A the system may see 6 A to 12 A for up to the fault time which is normally around 10 ms depending on the fault capacitor selection. At 12-A current and higher the slot shuts off after 100 ns, the peak current is only limited by the $R_{DS(on)}$ of the power FET and the sense resistor used for the hot plug. The system power has to be designed for these current loads without the system voltage dropping out of range for the other components in the system.

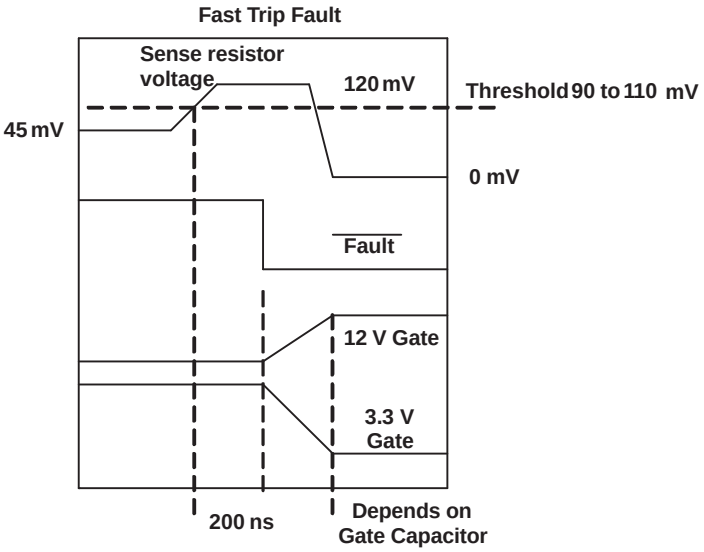

Figure 5. Fast Trip Fault

Copyright © 2006–2010, Texas Instruments Incorporated

Selection Trade-Offs

System design determines the controller's power off characteristics. High-end never-fail systems often use the current limit function and power off the module when a fault is detected. In these systems it is important that the module have a chance to recover and the system not hang.

Mid-range servers often use the circuit breakers with fast trip. System power has to be designed to handle these current loads without the system voltage dropping out of range for the other components in the system.

The module turn-on time is longer with the current limit, this may require a longer fault time to insure that the module is powered before the fault timer, times out.

The VAUXA/B is unaffected by the FAST trip mode. The over-current shutdown of VAUXA/B is always subject to the fault timer. An under-voltage turns off immediately with AUXINA/B. See Figure 6.

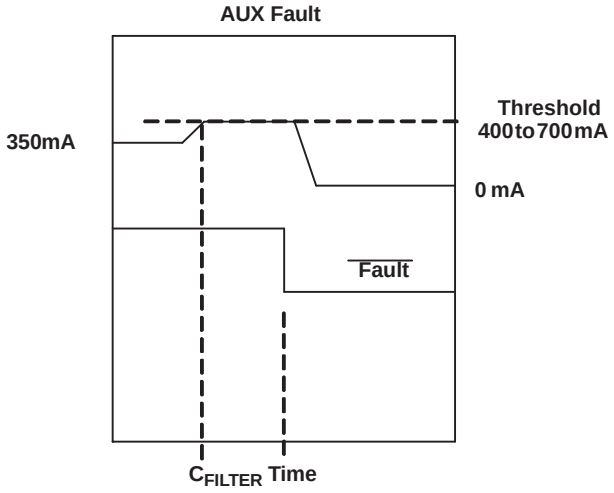

Figure 6. AUX Fault

Fault Threshold calculations

An over-current fault is determined by the voltage developed across a sense resistor. A small resistance, typically less than tens of milliohms is placed in the slot current switch path. The voltage across the sense resistor is input to a comparator that turns on when the voltage is greater than the current limit threshold.

The 3.3 V has a PCIExpress specification of 3.0 A for any connector width.

- With tolerances on the resistor and etch we limit the current to 3.5 A.
- The minimum current limit threshold for 3.3 V is 45 mV.

$$R_{SENSE} = \frac{\text{Threshold Voltage}}{I_{SENSE}} = \frac{0.045}{3.5\ A} = 0.0128\ \Omega$$

(use a 13-mΩ resistor)

Check the maximum current limit,

- A 1% resistor is 12.87 mΩ minimum.
- The Maximum current limit threshold is 55 mV.

$$I_{MAX} = \frac{\text{Threshold Voltage}}{R_{SENSE}} = \frac{0.055\ V}{12.87\ m\Omega} = 4.27\ A$$

Table 4. 3.3-V Sense Resistor Values

	RESISTOR (mΩ)	AVG CURRENT (A)	MAX CURRENT (A)
+3.3 V	13	3.5	4.27

The 12-V sense resistor values table shows the recommended R_{SENSE} values for the 12 V for the 1, 8, and 16 wide connectors.

Table 5. 12-V Sense Resistor Values

CONNECTOR WIDTH	RESISTOR (mΩ)	AVG CURRENT (A)	MAX CURRENT (A)
1	50	0.9	1.11
4,8	20	2.1	2.78
16	10	4.4	5.56
16 graphics	8	5.5	6.94

Copyright © 2006–2010, Texas Instruments Incorporated

Inrush Current

Inrush current is the large current at start-up due to capacitive loads. It can reduce the system voltage causing problems for other operating modules in the system. High inrush currents can destroy connector pins and circuit board etch. With over-current circuit breaker controls like the TPS2363, inrush current can turn on the over-current comparator and prevent the slot from turning on unless the proper gate capacitors and fault time is selected.

Inrush current can be limited by controlling the turn on rate of the power to the slot. Average inrush current can be calculated knowing the load capacitance and the turn on time of the slot voltage. In the usual case, the slot controller will not trip if the average inrush is less than one-third the over-current set point of the slot controller.

For the 3.3-V output an N-channel FET is used in a source follower configuration. The slot voltage turn on can be slowed by connecting a capacitor to the FET gate increasing the turn on time of the output. To determine the gate capacitor value, calculate the dv/dt for the load and then apply the same dv/dt to the FET gate. The following example shows how to calculate the gate capacitor value for the 3.3-V main power.

Example:

- The PCIExpress specification allows for 1000-μF maximum capacitance for the 3.3 V.
- Minimum trip point for the 3.3 V with 13 mΩ is 3.46 A. Use 3.46 / 3 = 1.15 A.
- I_{GATE} = 25 μA

$$I_{LOAD} = C_{LOAD} \times \frac{dv}{dt}, \frac{dv}{dt} = \frac{I_{LOAD}}{C_{LOAD}}$$

$$I_{GATE} = C_{GATE} \times \frac{dv}{dt}, \frac{dv}{dt} = \frac{I_{GATE}}{C_{GATE}}$$

$$\frac{I_{LOAD}}{C_{LOAD}} = \frac{I_{GATE}}{C_{GATE}}$$

$$C_{GATE} = \left(\frac{I_{GATE}}{I_{LOAD}}\right) \times C_{LOAD} = \left(\frac{25\ \mu A}{1.15\ A}\right) \times 1000\ \mu F = 21.7\ nF\ (\text{use } 22\ \mu F)$$

$$\frac{dv}{dt} \times \frac{25\ \mu A}{22\ nF} = 1136\ V/s$$

The 3.3-V slew rate is $\frac{3.3}{1136\ V/s} = 2.9\ ms$

From ONA/B asserted, the output doesn't turn on until the gate voltage rises to $V_{GS(th)}$. The gate capacitor causes a slight delay of the voltage ramp start from the power signal asserted.

Copyright © 2006–2010, Texas Instruments Incorporated

For the 12-V output, a P-channel FET is used in order to get sufficient V_{GS} for control. In this configuration the FET is a high-gain amplifier. The slew rate for the 12 V is controlled by a Miller capacitance from the gate of the FET to the source. The calculation is the same as the 3.3 V case but C_{MILLER} is reduced because by the gfs of the FET.

Example:

- The PCIExpress specification allows for 2000 μF maximum capacitance for the 12 V.
- Minimum trip point for the 12 V with an 8 mΩ is 5.63 A. Use $\frac{5.63}{3} = 1.88\ A$.
- Assume a gfs for the FET of about 3.
- I_{GATE} = 25 μA .

The equation to calculate the slew rate of the 12 V is:

$$\frac{dv}{dt} = \frac{I_{GATE}}{C_{MILLER} \times (gfs + 1)}$$

$$\frac{I_{LOAD}}{C_{LOAD}} = \frac{I_{GATE}}{\left(C_{MILLER} \times 4\right)}$$

$$\left(C_{MILLER} \times 4\right) = \frac{I_{GATE} \times C_{LOAD}}{I_{LOAD}}$$

$$C_{MILLER} = \frac{(25\ \mu A \times 2000\ \mu F)}{1.88 \times 4} = 6.6\ nF,\ (use\ 6800\ pF)$$

The delay time from ONA/B is controlled by the sum C_{GATE} and C_{MILLER}. Add a gate capacitor to the 12-V FET gate to keep the power on delay about the same as the 3.3-V FET. Since C_{MILLER} is small compared to the 3.3-V C_{GATE}, use the same capacitor value for 12-V gate as for the 3.3 V.

The table below shows the recommended gate capacitor for the 3.3-V and 12-V supply for the different connector widths.

Table 6. Recommended Gate Capacitor(1)

VOLTAGE	WIDTH	C_{MILLER} (pF)	C_{GATE} (nF)
+3.3	All		22
+12	All	6800	22

(1) Recommended capacitors to limit inrush current.

Copyright © 2006–2010, Texas Instruments Incorporated

MOSFET $R_{DS(on)}$

An important parameter in choosing a FET is the on-resistance, $R_{DS(on)}$. The lower the $R_{DS(on)}$, the smaller the steady state power dissipation of the MOSFET and the easier to maintain the PCI recommended bus voltage. Low $R_{DS(on)}$ does contribute to excessive currents under short circuit conditions discussed below. The lowest $R_{DS(on)}$ MOSFETs are the most expensive.

VDSS Voltage Drain to Source

To ensure safe operation of the external MOSFET, the drain-to-source voltage rating should be reasonably higher than V_{IN}. A 2-to-1 or 3-to-1 ratio of the V_{DSS} to V_{IN} is recommended.

$V_{DSS} > 2 \times V_{IN}$

ID Drain Current (continuous)

To handle steady state loading, the current rating of the MOSFET at the maximum case temperature (usually 70°C − 100°C), ID, should be at least:

$2 \times I_{TRIP(max)}$ (see R_{SENSE} Calculations Section).

I_D at $T_{C(max)} > 2 \times I_{TRIP(max)}$

IDM Pulsed Drain Current (plus PD and SOA)

To handle steady state loading, the current rating of the MOSFET at the maximum case temperature (usually 70°C − 100°C), ID, should be at least:

$2 \times I_{TRIP(max)}$ (see R_{SENSE} Calculations Section).

I_D at $T_{C(max)} > 2 \times I_{TRIP(max)}$

IDM Pulsed Drain Current (plus PD and SOA)

TPS2363 has short circuit output protection. The MOSFET is exposed to large power dissipation for a maximum of 500 ns. During this time, the current is the supply voltage / ($R_{DS(on)}$ + R_{SENSE}). When an excessive current spike occurs, the MOSFET carries the trip point current at the supply voltage for the duration of the fault time. Ratings for maximum power dissipation in the device and safe operating area must be considered along with IDM calculation in device selection:

IDM, PD, and SOA calculated

VGS Voltage Gate to Source

The gate-to-source voltage rating, VGS of the 3.3-V MOSFET should be at least 15 V because the TPS2363 3.3-V gate voltages can be as high as 15 V and the source voltage can be shorted to ground.

VGS(3.3) > 15 V

The VGS of the 12-V MOSFET should be 15 V because the TPS2363 gate voltage is as low as 0 V when the source is 15 V.

VGS(12) = 15 V

Copyright © 2006–2010, Texas Instruments Incorporated

Reference Design

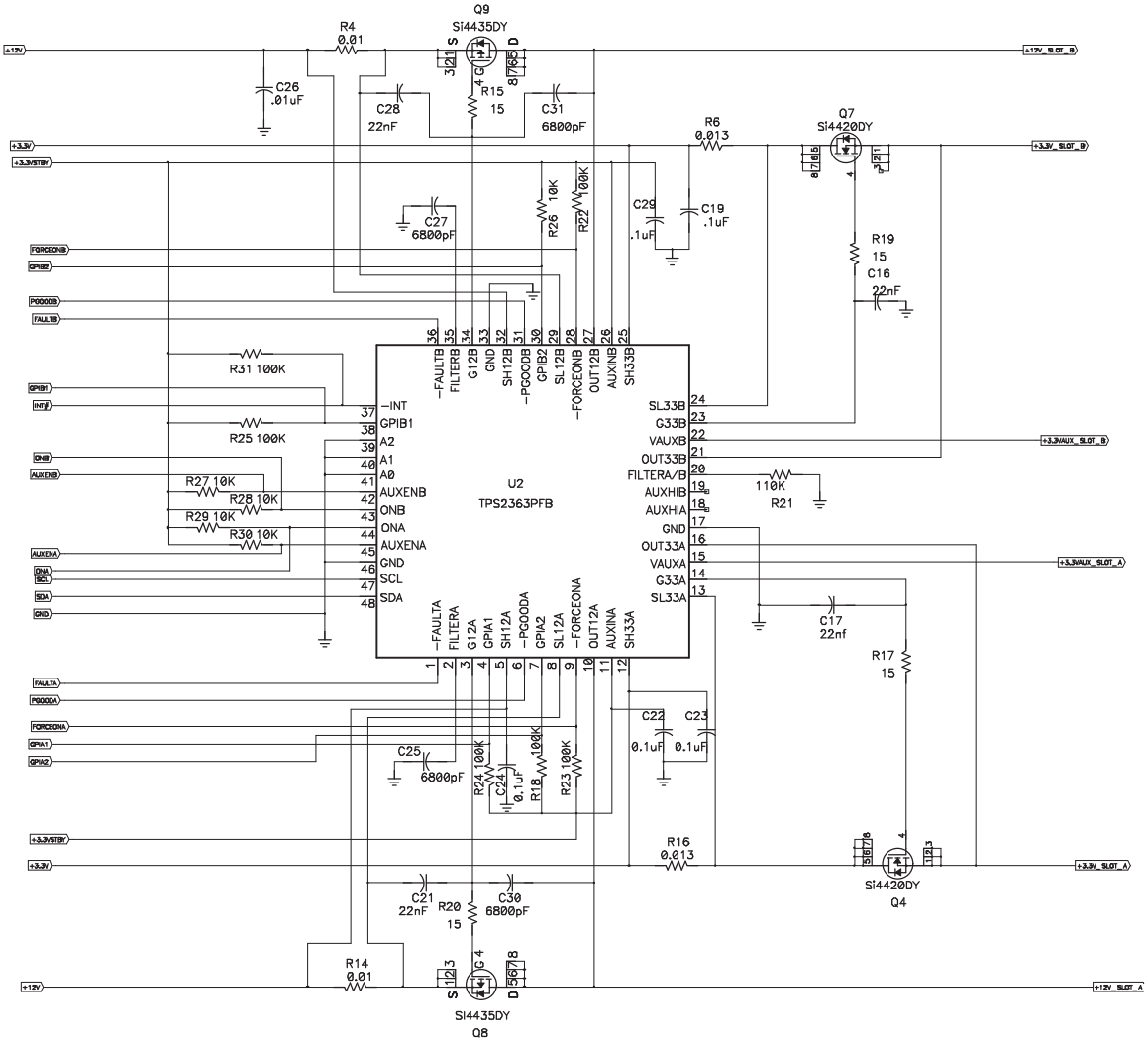

Figure 7. Reference Design

Copyright © 2006–2010, Texas Instruments Incorporated

150-W Add-In Module

The PCI Express x16 Graphics 150W-ATX Specification Revision 1.0 states:

- The slot connector provides main power to 75 W.
- A second cable-mounted add-in-module connector is used for an additional 12 V at 75 W.
- The 12-V main power at the slot and the 12-V additional power are separate.
- The hot plug functionality of PCI Express CEM1.1 is not supported.

In order to make it easier to use these 150-W modules in a hot swap environment, the 12-V 75-W source can be operated from a TPS2490 power controller.

- Turn on the TPS2490 with the TPS2363 slot power controller.
- Wire-OR the Power Good outputs from each controller.
- On over-current or power failure of any supply, the slot power is turned off.
- If the 12Volt 75 Watt power is plugged into the module before it is inserted into the slot, all supplies to the module can be powered at one time.

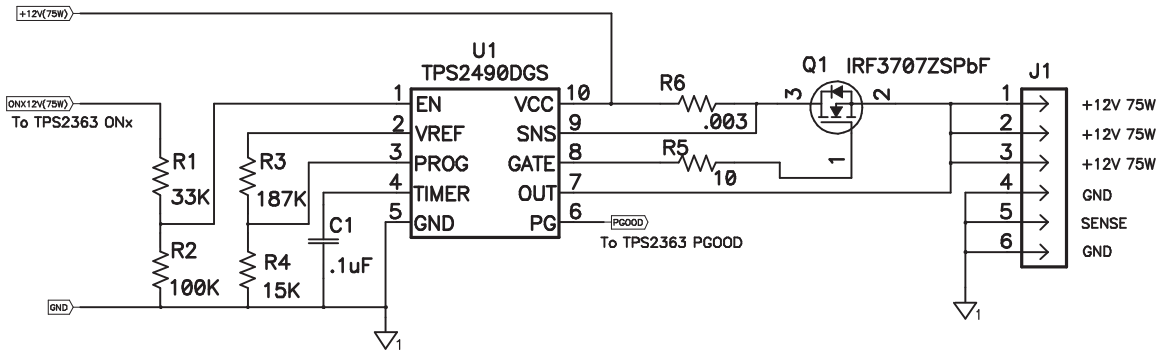

Figure 8. 150-W Application

Layout Considerations

Since the main voltage inputs to the TPS2363 are also the sense resistor inputs, some consideration must be given to the layout for accurate read-back of the output currents.

See Figure 9 and Figure 10

- Sense resistors are close to the TPS2363
- TPS2363 pins SH12A/B and SH33A/B are not connected to inner layer power.
- Connect the high side sense resistor to inner layer power.
- Use a 0.1 μF to decouple the sense resistors close to the TPS2363.
- Do not make additional connection SH12A to SH12B or SH33A to SH33B.
- Depending on system conditions, it may be necessary to place a 1-nF capacitor either across the sense resistor or from the low side of the sense resistor to ground close to the TPS2363.

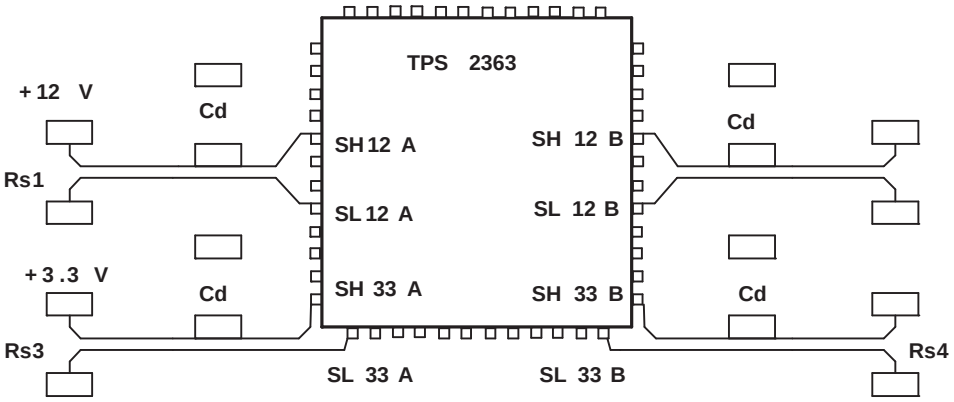

Figure 9. Sense Resistor – Power Layout

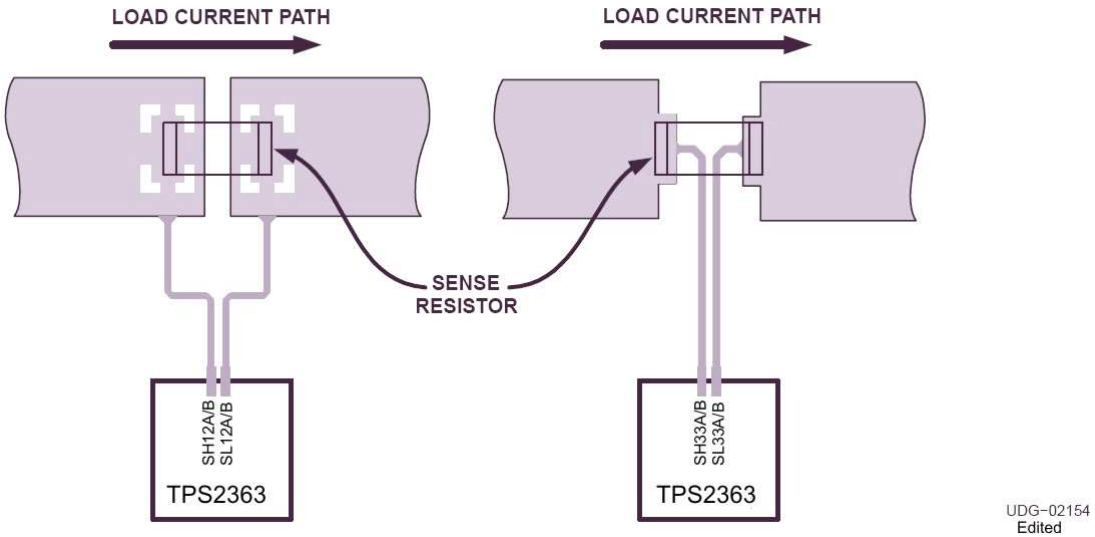

Figure 10. Sense Resistor Routing

Copyright © 2006–2010, Texas Instruments Incorporated

Over Temperature

The TPS2363 has a wide operating junction temperature range and each channel operates independently. If the temperature of one slot controller increases to TSHUT1 and a normal VAUXA/B over-current condition exists, the out of range channel immediately shuts off all main and VAUXA/B power to the slot. The over-temperature shutdown does not use the fault timer and supersedes it if the timer is in process. The other channel continues to operate. The $\overline{\text{FAULT}}$ bit is active on the powered off slot. If the temperature returns below the hysteresis value, the $\overline{\text{FAULT}}$ may be cleared by ONA/B if caused by the main power or AUXENA/B if caused by VAUXA/B, and slot operation continued. In SMBus mode refer to the programming section.

If the temperature of the die rises to TSHUT2, both channels of the TPS2363 are immediately shut down regardless of current limit conditions, and the OT_INT bit in the common status register will be set. If the temperature returns below the hysteresis value, operations may resume to the state before the shutdown was entered.

Interrupt on Fault

The $\overline{\text{INT}}$ output signal can be used in either direct or SMBus mode to interrupt the processor in the event of a power fault. Main or VAUXA/B power faults, under-voltage on the main supplies or the TSHUT2 over-temperature condition will assert $\overline{\text{INT}}$ low.

In direct mode, the $\overline{\text{INT}}$ signal is always enabled. The interrupt is cleared when the fault condition is removed. De-assert ONA/B to clear the main power faults. VAUXA/B power faults are cleared when AUXENA/B is de-asserted. If $\overline{\text{INT}}$ is not used, pull-up the pin to AUXINA/B with a 100-kΩ resistor and use the $\overline{\text{FAULTA/B}}$ output to check slot status.

In SMBus mode, the INTMASK bit in the common status register can be set to disable the $\overline{\text{INT}}$ output. If $\overline{\text{INT}}$ is disabled, status registers are polled for fault information. The INTMASK bit is low by default enabling the $\overline{\text{INT}}$ output.

The STATA/B register indicates a $\overline{\text{FAULTA/B}}$ (D7) and the supply that caused the fault VAUXFA/B (D4), 12VFA/B (D2), and 3VFA/B (D0). The fault is cleared in similar manner to direct mode by de-asserting MAINENA/B (D1) in CNTRLA/B for main power and AUXENA/B (D0) for auxiliary power. After the fault is removed, the original fault status remains in the STATA/B register. The fault status is cleared by writing a “1” to the STATA/B bit positions to be cleared (3VFA/B, 12VFA/B, or VAUXFA/B). $\overline{\text{FAULTA/B}}$ in register STATA/B is not writable but is cleared when the fault status bits are all clear.

Other fault status is available in the common status register. An under-voltage event on the main supplies is indicated by UV_INT (D2). An over-temperature reaching TSHUT2 is indicated by OT_INT (D1). These status bits are cleared by writing a “1” to the correct common status register bit position.

Forced Enable Outputs

Slot turn on using $\overline{\text{FORCEONA/B}}$ is not recommended for system operation but may be useful for debug and test. When $\overline{\text{FORCEONA/B}}$ is asserted low, the VAUXA/B and the main voltage outputs are turned on regardless of over-current, short circuit, or under-voltage conditions. The only exception is that under-voltage detection on the AUXINA/B remains active and affects a shutdown of the VAUXA/B output. All voltage outputs remain on through temperature TSHUT1 but are shutdown without fault timer at TSHUT2. If $\overline{\text{FORCEONA/B}}$ is not used, these inputs are pulled up to AUXINA/B with a 100-kΩ resistor.

When the $\overline{\text{FORCEONA/B}}$ is active, outputs $\overline{\text{FAULTA/B}}$ and $\overline{\text{PGOODA/B}}$ are false. Actual fault conditions can be read from the SMBus STATA/B and common status registers.

The $\overline{\text{FORCEON}}$ INHIB(A/B) bit in the control registers CNTRLA/B is set in order to disable the

$\overline{\text{FORCEONA/B}}$ inputs. In this way, the direct mode hardware cannot override the SMBus as the control interface. The default condition of this bit is to enable the $\overline{\text{FORCEONA/B}}$.

Copyright © 2006–2010, Texas Instruments Incorporated

General Purpose Input Pins

The general purpose input (GPI) pins can be connected to any 3.3-V digital signal for read-back to the system controller. These inputs are switch de-bounced for direct connection to a VAUXA/B control (switch), attention or manually-operated retention latch. Each GPI pin has an internal 100-kΩ pull down.

Poweroff

The PWROFFA/B bits are available through the SMBus function register. PWROFF is a logic 1 when the slot main power and VAUX are less than the low comparitor threshold (100 mV typ). It can be used to determine that the slot is off and it is safe to remove or install a module in the slot.

Pin out for the PFB 48 pin package with the SMBus

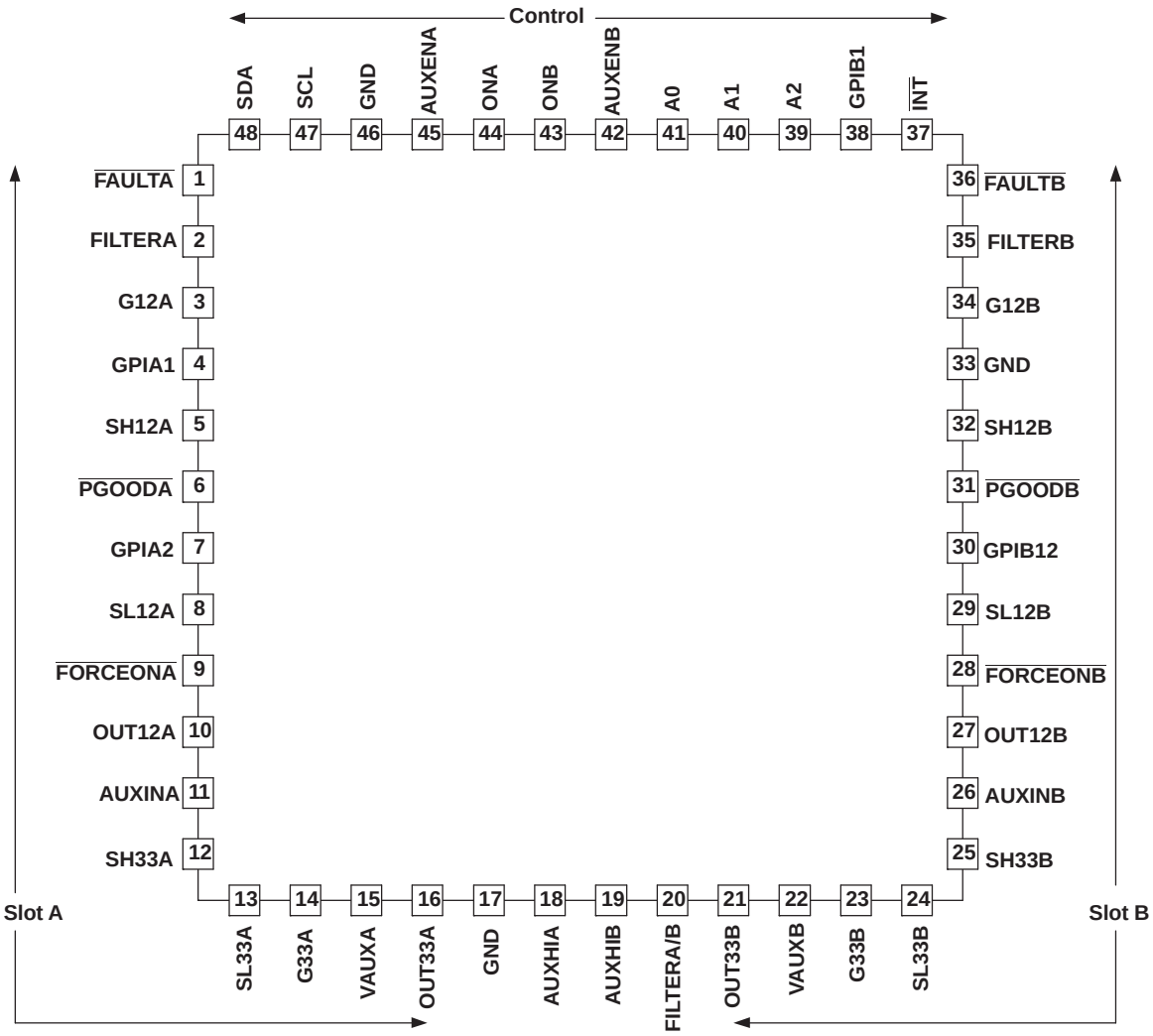

Figure 11. PFB 48-Pin Package

Copyright © 2006–2010, Texas Instruments Incorporated

Direct Mode

In direct mode, the TPS2363 is controlled by AUXENA/B to enable VAUXA/B and ONA/B to enable the main supplies. FORCEONA/B can be used for test and debug. PGOODA/B and FAULTA/B is the only status available without using the SMBus.

The SMBus does not have to be disabled to use direct mode. The SMBus can be used to read the status and the general purpose inputs. Do not write to control A/B registers to when the TPS2363 is in direct mode. A write to the control A/B registers switches the TPS2363 to SMBus mode. It will not switch back to direct mode until power is cycled on the TPS2363. Writes to the function register are permitted to change the VAUXA/B current limit and to disable the current limit.

If the SMBus is not used, pull SCL, SDA to 3.3 V or AUXINA/B with 100-kΩ resistors, A0 – A2 should be tied to ground.

If the interrupt is not used, pull $\overline{\text{INT}}$ to 3.3 V or AUXINA/B with 100-kΩ resistors.

SMBus Mode

In SMBus mode, the TPS2363 is controlled by the SMBus Registers. Direct mode is disabled by connecting AUXENA/B and ONA/B and tied to ground.

The $\overline{\text{FAULTA/B}}$ bit in the STATA/B register is an indication of the $\overline{\text{FAULTA/B}}$ pin and is inactive in SMBus mode.

Mode connections are summarized in the Power-On Reset section, MODE_PIN CONNECTION Table.

Programming

The clock and data line are pulled high with a 10-kΩ resistor to 3.3 V or AUXINA/B at the end of the SMBus. The terminator sets to the default values on power up and when enabled.

The controller is programmed using the SDA and SCL pins, these are normally high, the falling edge of SCL clocks the data. The sequence starts by asserting the data line, then at least 25 ns later asserting the clock. Asserting is driving the line low. The clock should negate after 25 ns then the data should negate for a read or stay asserted for a write. The clock asserts, then after 25 ns negates and the next clock assertion starts the read or write with D7, D6, D5, D4, D3, D2, D1, D0, ACK (high), stop (low). The address is sent out with the Read/Write bit, the Target address byte and the payload byte. There are 7 registers that can be addressed.

The address is 7 bits long. The TPS2363 is address selection uses A0 to A2, where no bit set is 1000000b, 1000001b (A0 only set), 1000010b (A1 only set), 1000011b (A0 + A1 set), 1000100b (A2 only set), 1000101b (A0 + A2 set), 1000110b (A1 + A2 set) and 1000111b (A0, A1 + A2 set). The 8th bit is for read/write.

The SMBus can be used with direct mode operation, the registers will react different if AUXENA/B or ONA/B is used than when they are turned on through the SMBus.

SMBus serial clock input terminal (SCL)

The SCL terminal allows the host controller to send a clock signal that synchronizes the data coming into or out or the SDA terminal of the TPS2363. The frequency of this clock can be anywhere from 10 kHz and 400 kHz. Timing diagrams show the relationship of the SCL to the SDA.

SMBus serial data input/output terminal (SDA)

The SDA terminal allows the host controller to program and read status from the TPS2363. Data sent into our out of the SDA terminal is synchronous with the rising edge of SCL. Timing diagrams show the relationship between SDA and SCL.

Copyright © 2006–2010, Texas Instruments Incorporated

Echo Reset

Some bits in the STATA/B and the common status register are fault indications that can cause an interrupt. These bits remain set even if the fault condition has been cleared. This is done to allow time for the controller to process the interrupt and read the fault condition. When the controller writes a 1 back to the set bit, the bit is cleared on the next read of the register if the fault condition has been removed. This is called echo reset. These bits are STATA/B positions D0, D2, D4, and common status register D1 and D2.

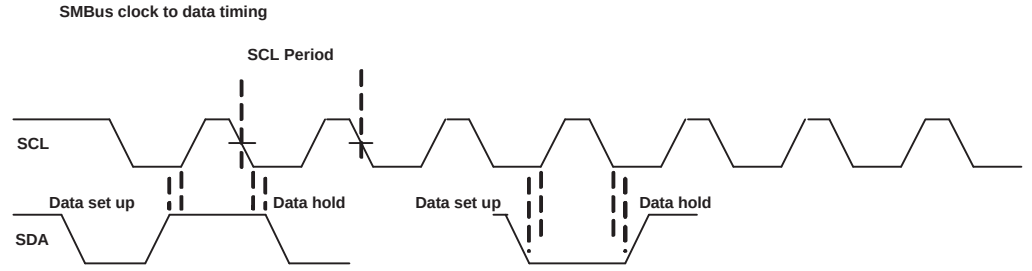

Figure 12. SMBus Clock to Data Timing

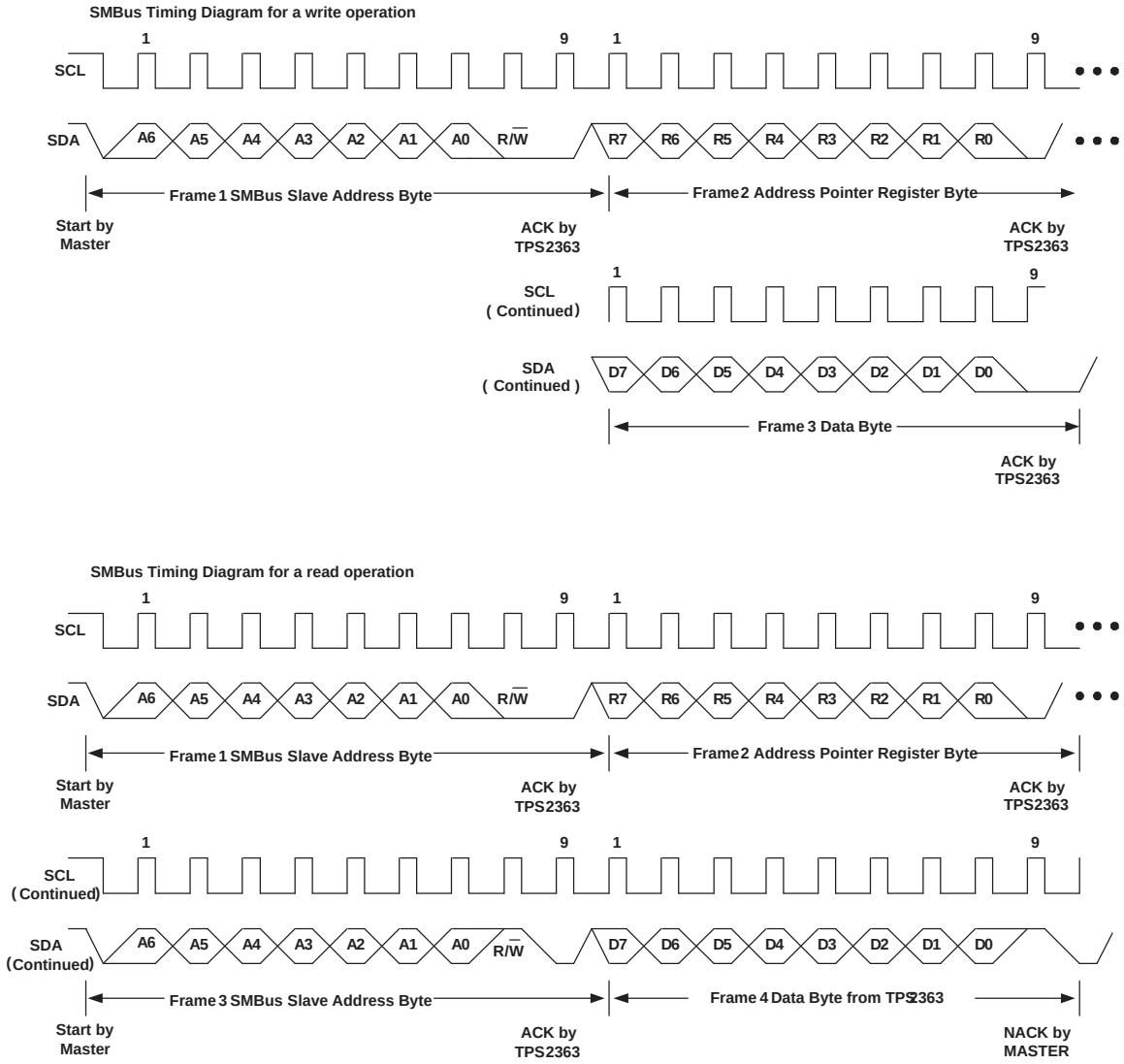

Figure 13. SMBus Timing Diagram for Write/Read Operation

Copyright © 2006–2010, Texas Instruments Incorporated

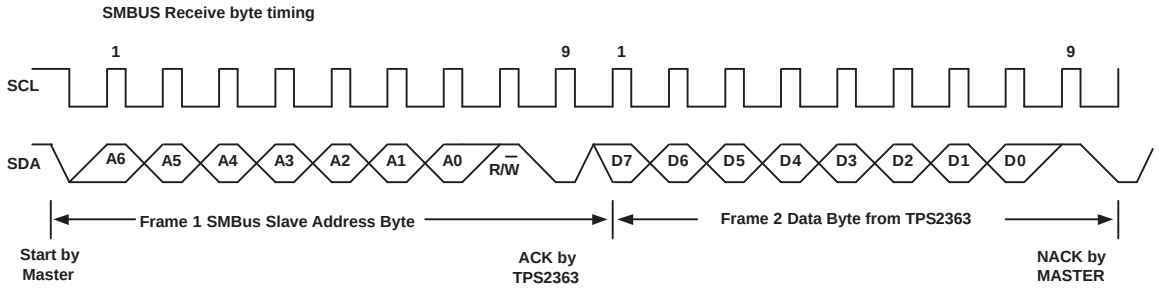

Figure 14. SMBus Receive Byte Timing

Table 7. Register Set (1) (2) (3) (4)

TARGET REGISTER		COMMAND BYTE VALUE		POWER-ON DEFAULT
LABEL	DESCRIPTION	READ	WRITE	
Reserved	00h	N/A	N/A	N/A
Reserved	01h	N/A	N/A	N/A
CNTRLA	Slot A control	02h	02h	00h
CNTRLB	Slot B control	03h	03h	00h
STATA	Slot A status	04h	04h	00h
STATB	Slot B status	05h	05h	00h
Chip STAT	Common status	06h	06h	00h
FUNCTION	Special functions	07h	07h	0dh

(1) DMC = direct mode control.
(2) SMC = SMBus control.
(3) UVLO = Under Voltage Lockout.
(4) RSVD bits are read only and reads zero.

Table 8. Control Registers (02h, 03h)(1)

AUX PG(A/B)	MAIN PG(A/B)	RSVD	RSVD	RSVD	-FORCEON INHIB(A/B)	MAINEN(A/B)	AUXEN (A/B)
R	R	R	R	R	R/W	R/W	R/W

(1) CNTRL A (02h), CNTRL B (03h): Default 00h (Do not write to this register in direct mode)

Valid write commands:

- 00h – Force mode is enabled with all supplies disabled.
- 01h – Enable VAUXA/B supply with force mode.
- 02h – Enable main supplies with force mode.
- 03h – Enable main and VAUXA/B with force mode.
- 04h – Disable FORCEON pins with all supplies disabled.
- 05h – Enable VAUXA/B supply without force mode.
- 06h – Enable main supplies without force mode.
- 07h – Enable all supplies without force mode.

(A write to this register in direct mode switchs the TPS2363 to SMBus mode, it will not switch back until power is cycled on the TPS2363.)

Copyright © 2006–2010, Texas Instruments Incorporated

Valid Read Data: (Y corresponds any of the combinations from above)

- 0Yh – VAUXA/B and main have are not in power good mode.
- 4Yh – Only the main supplies are in power good mode.
- 8Yh – Only the VAUXA/B is in power good mode.
- cYh – Both VAUXA/Band main are in power good mode.

AUX PG(A/B) (R) : This bit indicates the power good status on the VAUXA/B outputs.

- 1 – VAUXA/B output is above the power good threshold.
- 0 – VAUXA/B output is NOT above the power good threshold.

It is set when all of the following conditions are true:

- VAUXA/B is enabled through SMBus or direct mode control .
- VAUXA/B is above the power good threshold.

The value of this bit is not affected by $\overline{\text{FORCEONA/B}}$.

MAIN PG(A/B) (R) : This bit indicates the power good status on 3.3 V and 12 V.

- 1 – The 3.3 V and 12 V outputs are both above their respective power good thresholds.
- 0 – At least one of the main supplies (3.3 V or 12 V) is not above its power good threshold.

It is set when all of the following conditions are true:

- The main supplies are enabled through SMBus or direct mode control.
- 3.3 V AND 12 V are in above power good threshold.

The value of this bit is not affected by $\overline{\text{FORCEON}}$ INHIBA/B bit.

$\overline{\text{FORCEON}}$ INHIB(A/B) (R/W): This bit is used to inhibit the $\overline{\text{FORCEONA/B}}$ pin.

- 1 – The $\overline{\text{FORCEONA/B}}$ pin is ignored.
- 0 – The $\overline{\text{FORCEONA/B}}$ pin can be used.

MAINEN(A/B) (R/W) : This bit controls the main supplies (3.3 V and 12 V).

- 1 – Enables 3.3 V and 12 V outputs.
- 0 – Disables 3.3 V and 12 V outputs.

The channel is enabled when this bit is set and all of the following conditions are true:

- 3.3 V or 12 V not in fault – (Fast trip or over current with timeout or over current with TSHUT1 or UVLO or TSHUT2).
- The AUXINA/B input is above its UVLO threshold.
- To reset a fault condition, the bit must be turned off and back on.

AUXEN (A/B) (R/W): This bit controls VAUXA/B output.

- 1 – Enables the VAUXA/B channel.
- 0 – Disables the VAUXA/B channel.

Channel A is enabled when this bit is set and the following conditions are true:

- VAUXA/B not in fault. (Over current with timeout or over current with TSHUT1 or UVLO or TSHUT2)
- The AUXINA/B input is above its UVLO threshold.
- To reset a fault condition, the bit must be turned off and back on.

Copyright © 2006–2010, Texas Instruments Incorporated

Table 9. STAT A (04h), STAT B (05h): Default 00h

FAULTA/B	MAINA/B	AUXA/B	VAUXFA/B	RSVD	12VFA/B	RSVD	3VFA/B
R	R	R	R/W	R	R/W	R	R/W

Valid write commands: The write commands are used to clear the faults in these registers.

- 00h, 01h, 04h, 05h, 10h, 11h, 14h, 15h

Valid read commands: 0Y through fY (Y corresponds to 0, 1, 4, or 5)

FAULT A/B : This bit indicates the status of the $\overline{\text{FAULTA/B}}$ pin.

- 1 – $\overline{\text{FAULTA/B}}$ pin is low.
- 0 – $\overline{\text{FAULTA/B}}$ pin is high (open drain).

When the bit has been set due to an over current, the corresponding enable bits or pins need to be cycled off and back on to clear the fault and an echo reset in SMBus mode.

When $\overline{\text{FORCEONA/B}}$ is low, the $\overline{\text{FAULTA/B}}$ pin is in open drain state. FAULTA/B bit is not affected. When using SMBUS for control, this bit is deactivated.

MAINA/B: This bit indicates the internal enable status of the main supplies.

- 1 – 3.3 V and 12 V are enabled (after ensuring there are no fault, UVLO, or FORCE conditions).
- 0 – 3.3 V and 12 V are disabled.

AUXA/B: This bit indicates the internal enable status of the AUX supply.

- 1 – 3.3 V AUX is enabled.
- 0 – 3.3 V AUX is disabled.

VAUXFA/B: This bit indicates and over current fault condition on VAUXA/B.

- 1 – There is an over current condition on VAUXA/B i.e.,
  - Normal over current and timeout or
  - Normal over current and TSHUT1
- 0 – No over current condition.

When TPS2363 is enabled using SMBus for control, this bit needs to be cleared by the master – ECHO RESET condition. i.e., a “1” is written into this bit by the master. Once this is done, pin $\overline{\text{INT}}$ will be de-asserted (i.e. it goes high).

12VFA/B : This bit indicates an over current fault condition on 12 V out – A

- 1 – There is an over current condition on 12 V out A ie.,
  - Normal over current and timeout or
  - Normal over current and TSHUT1 or
  - Fast trip.
- 0 – No over current condition.

Copyright © 2006–2010, Texas Instruments Incorporated

When TPS2363 is enabled using SMBus for control, this bit needs to be cleared by the master – ECHO RESET condition. i.e., a “1” is written into this bit by the master. Once this is done, pin $\overline{INT}$ will be de-asserted i.e., it goes high.

3VFA/B : This bit indicates an over current fault condition on 3.3 V out – A

- 1 – There is an over current condition on 3.3 V out A i.e.,
  - Normal over current and timeout or
  - Normal over current and TSHUT1 or
  - Fast trip.
- 0 – No over current condition.

When TPS2363 is enabled using SMBUS for control, this bit needs to be cleared by the master – ECHO RESET condition. i.e., a “1” is written into this bit by the master. Once this is done, pin -INT will be de-asserted i.e., it goes high.

Table 10. Common Status Register (06h) : Default 00h

GPI-B2	GPI-A2	GPI-B1	GPI-A1	INTMASK	UV_INT	OT_INT	RSVD
R	R	R	R	R/W	R/W	R/W	R

Valid write commands: Write commands are used to clear faults due to UVLO, otsd2.

- 00, 02, 04, 06, 08, 0a, 0c, 0e

Valid read commands: 0Y through fY (Y corresponds to any of the combinations above).

GPI_B2/GPI_A2/GPI_B1/GPI_A1 : These bit indicate the status of GPIx pins after a deglitch of 5 ms.

- 1 – GPIA/B pins are high.
- 0 – GPIA/B pins are low.

INTMASK: (Active low).

- 1 – $\overline{INT}$ pin is disabled.
- 0 – $\overline{INT}$ pin is enabled.

When this bit is 0 and there is a fault on (any of the channels), $\overline{INT}$ pin goes low.

Copyright © 2006–2010, Texas Instruments Incorporated

UV_INT: This bit indicates the UVLO condition on the main supplies only. The status of this bit depends on the conditions on main enable pins or the main enable bits in the control register. If the main supplies are disabled, this bit is 0.

- 1 – UVLO fault. (and supplies are enabled)
- 0 – No UVLO fault. Supplies are above UVLO thresholds.

When using SMBUS, this bit is reset using the ECHO reset condition.

OT_INT : This indicates the TSHUT2 condition on the die.

- 1 – Die temperature > 160°C.
- 0 – Die temperature < 160°C.

When using SMBUS, this bit is reset using echo reset condition.

Table 11. Function (07h) : Default : 0dh

ILIM_AU XB	ILIM_AUXA	PWROFFB	PWROFFA	ILIM_MAINB	ILIM_MAINA	RSVD	TI*
R/W	R/W	R	R	R/W	R/W	R	1

Valid write commands:

0dh – Default state. Enable normal current limit on A and B, lower current limits on VAUXA/B 01, 05, 09, 4d, 41, 45, 49, 81, 85, 89, 8d, c1, c5, c9, cd

Valid read commands: all combinations except 00h.

ILIM_AUX_B: This bit controls the level for current limit on VAUX – B *

- 1 – High current limit (800 – 1500 mA).
- 0 – Low current limit (400 – 800 mA).

ILIM_AUX_A: This bit controls the level for current limit on VAUX – A *

- 1 – High current limit (800 – 1500 mA)
- 0 – Low current limit (400 – 800 mA

*The output current mode is determined by pins AUXHIA/B ORed with the ILIM_AUX_A/B. If AUXHIA/B is pulled up ILIM_AUX_A/B cannot select low current mode.

PWROFF_B: Indicates the power off condition on channel B.

- 1 – Outputs are < 100 mV on VAUXB & B channel main supplies.
- 0 – At least one output is > 100 mV on VAUXB & B channel main supplies.

PWROFF_A: Indicates the power off condition on channel A

- 1 – Output is < 100 mV on VAUXA & A channel main supplies
- 0 – At least one output is > 100 mV on VAUXA & A channel main supplies.

ILIM_MAIN_B (active low): This bit indicates whether current limit is enabled on the main supplies for channel B.

- 1 – Fast trip and normal current limit are enabled. (This is the default mode)
- 0 – Fast trip is enabled, but the current limit is disabled.

ILIM_MAIN_A (active low): This bit indicates whether current limit is enabled on the main supplies for channel A.

- 1 – Fast trip and normal current limit are enabled. (This is the default mode)
- 0 – Fast trip is enabled, but the current limit is disabled.
  - TI – 1 indicates this is the TI TPS2363 and that this is a valid register.

Copyright © 2006–2010, Texas Instruments Incorporated

Typical Characteristics

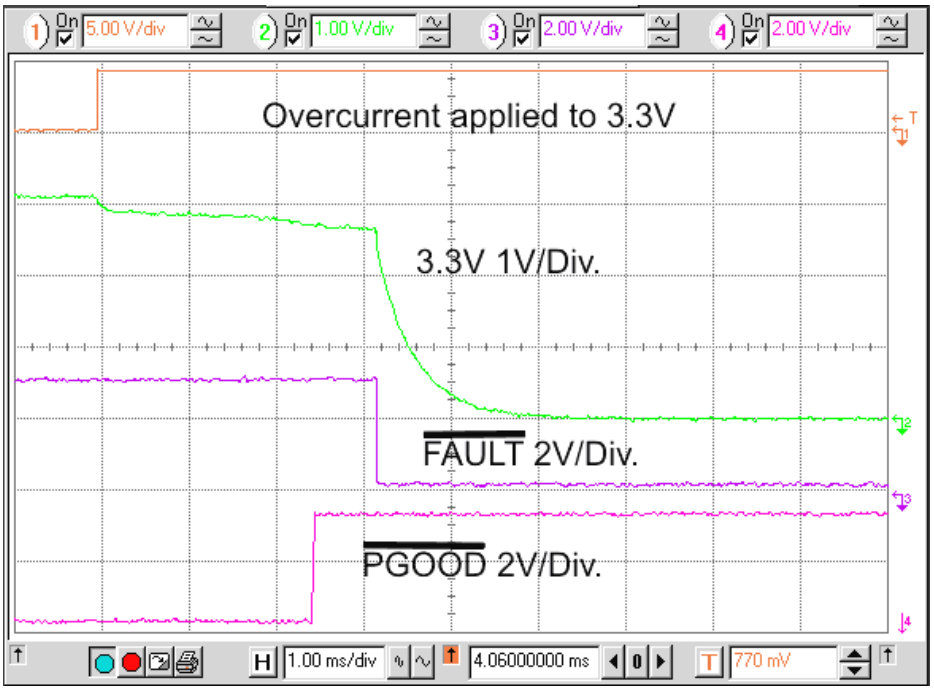

Figure 15. Over Current Applied to 3.3 V - $\overline{\text{FAULT}}$ & $\overline{\text{PGOOD}}$

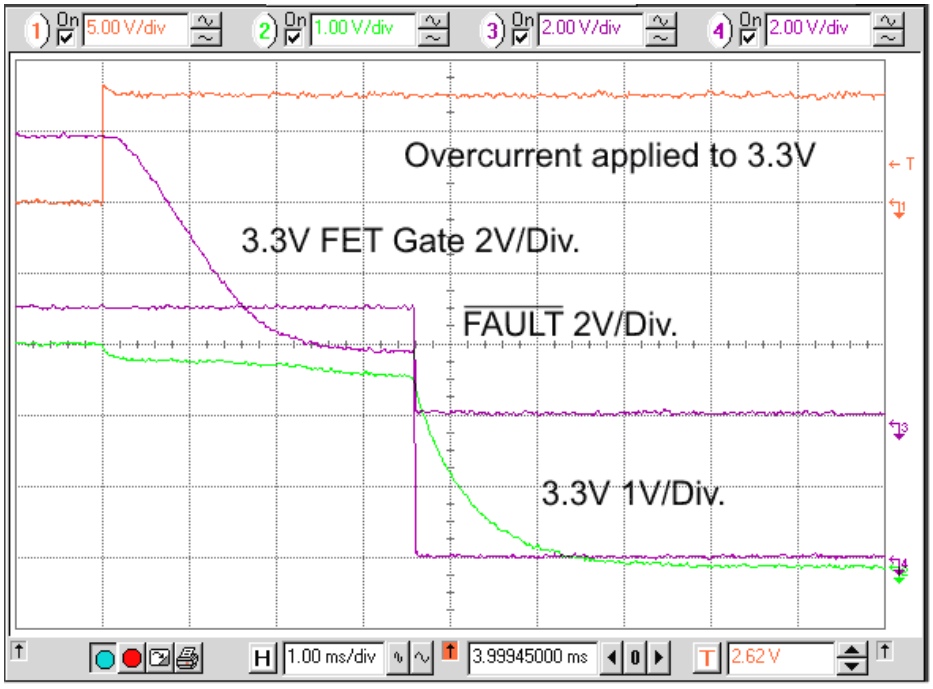

Figure 16. Over Current Applied to 3.3V - Gate

Copyright © 2006–2010, Texas Instruments Incorporated

Typical Characteristics (continued)

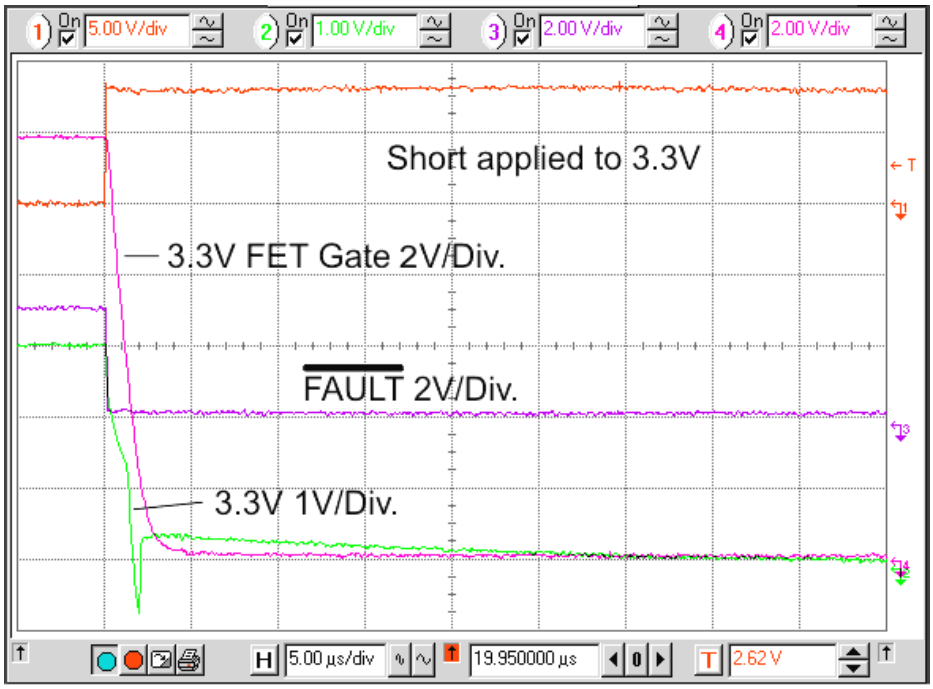

Figure 17. Short applied to 3.3V

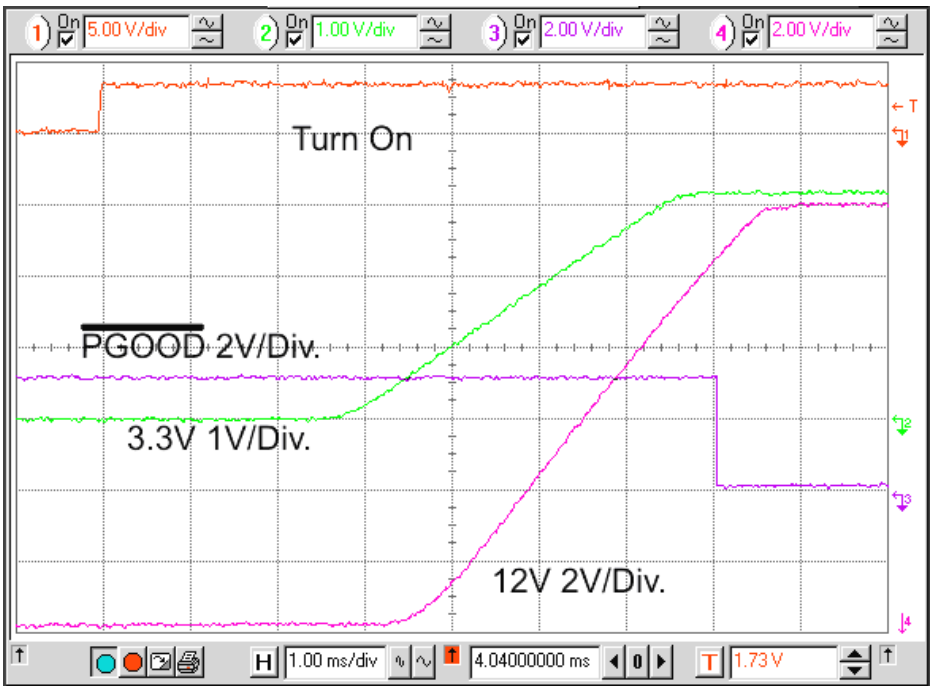

Figure 18. Turn On of the Main Voltages

Typical Characteristics (continued)

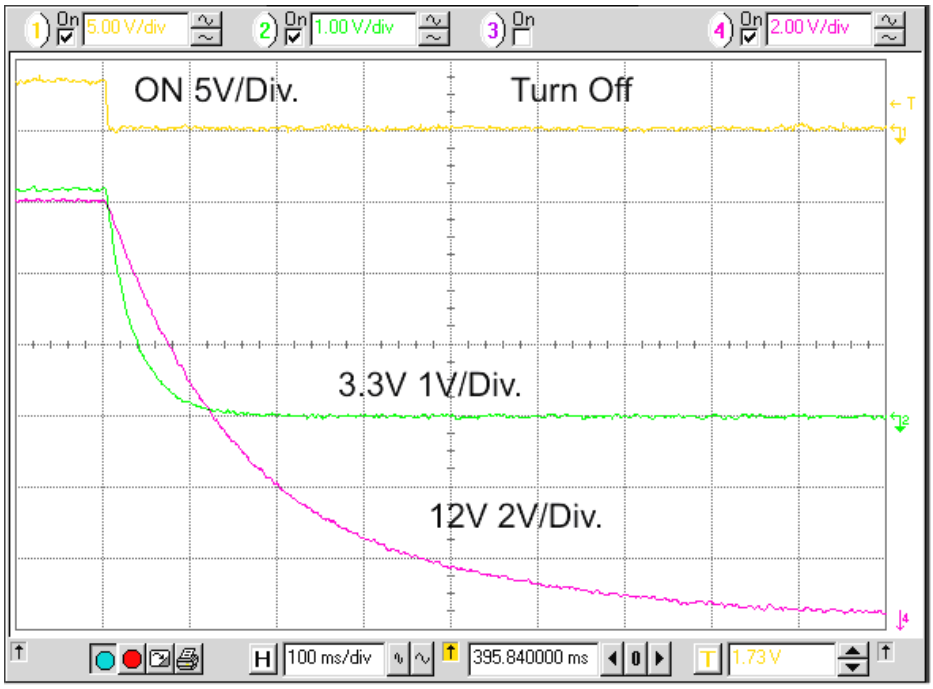

Figure 19. Turn Off of the Main Voltages

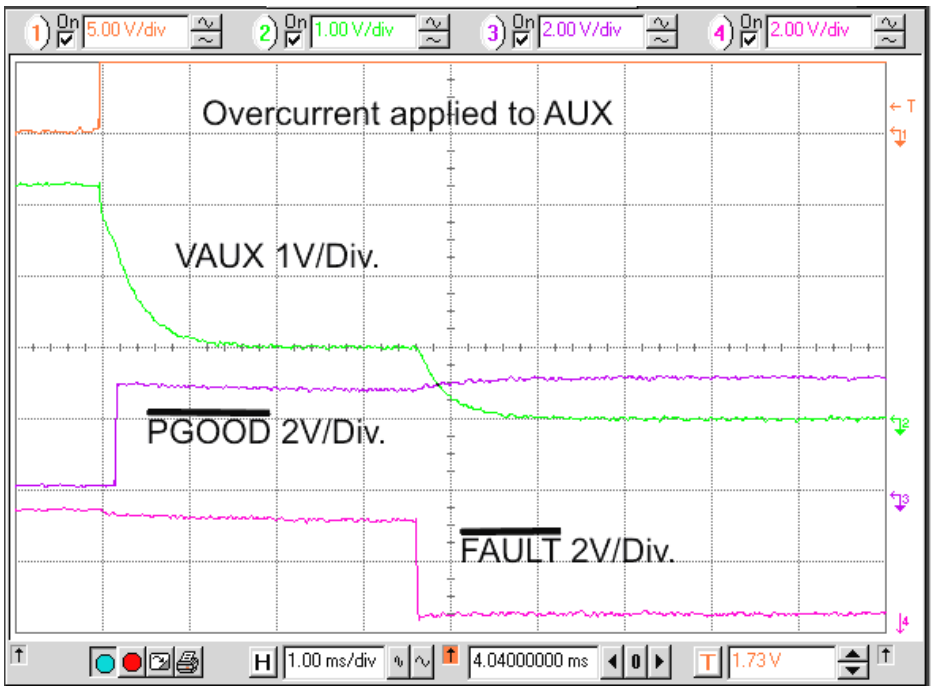

Figure 20. Over Current Applied to AUX

Copyright © 2006–2010, Texas Instruments Incorporated

Typical Characteristics (continued)

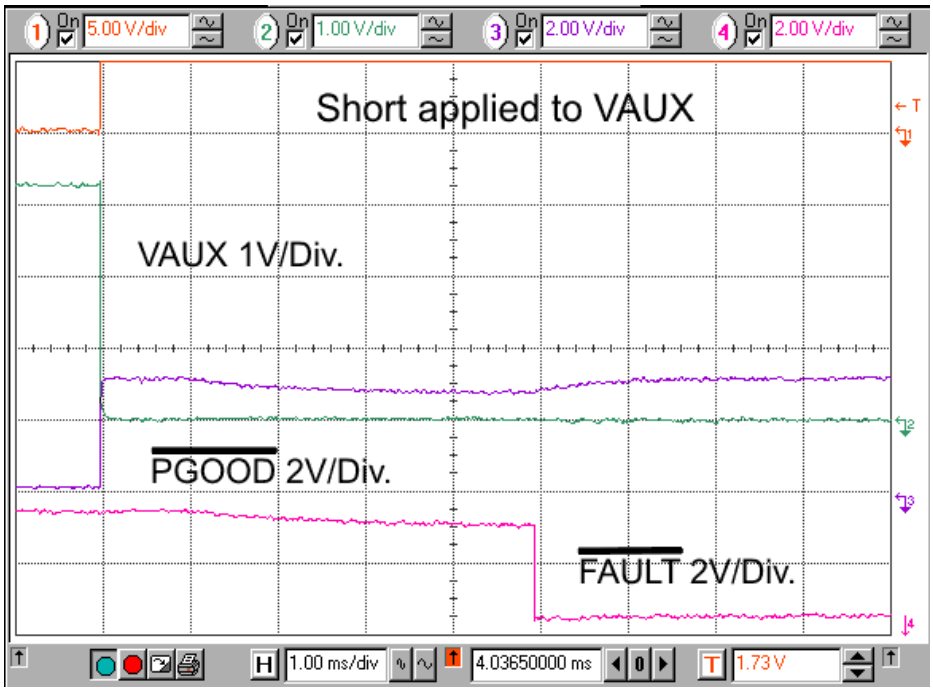

Figure 21. Short Applied to AUX

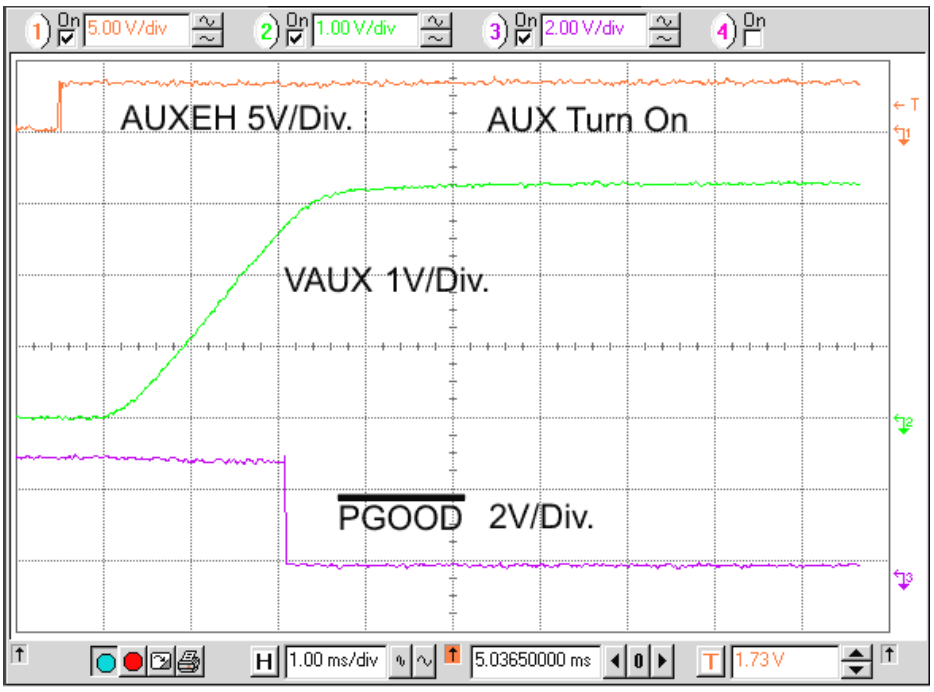

Figure 22. AUX Enable Turn On

Typical Characteristics (continued)

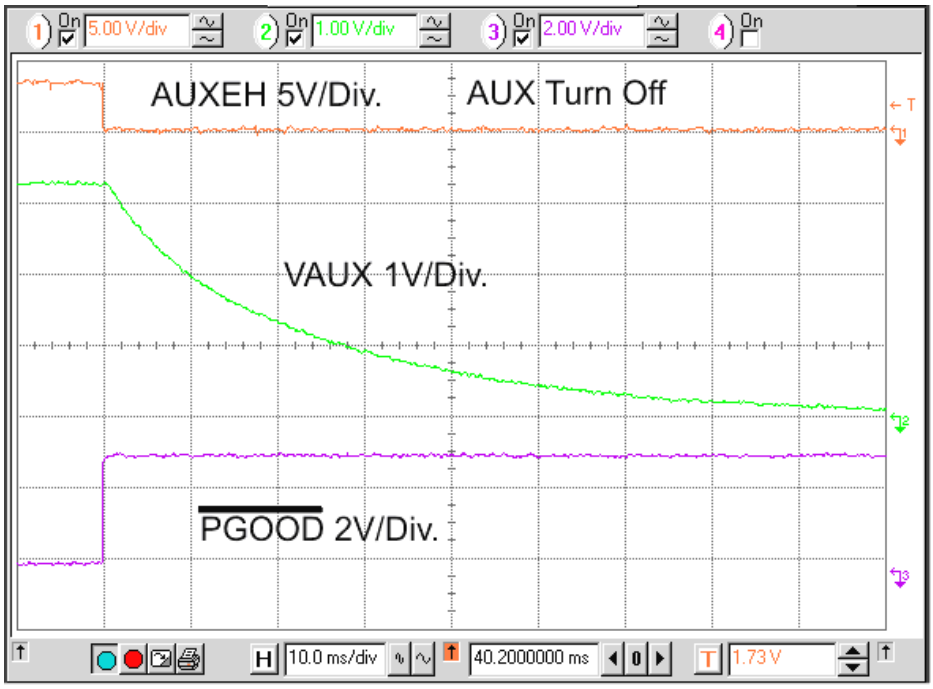

Figure 23. AUX Disable Turn Off

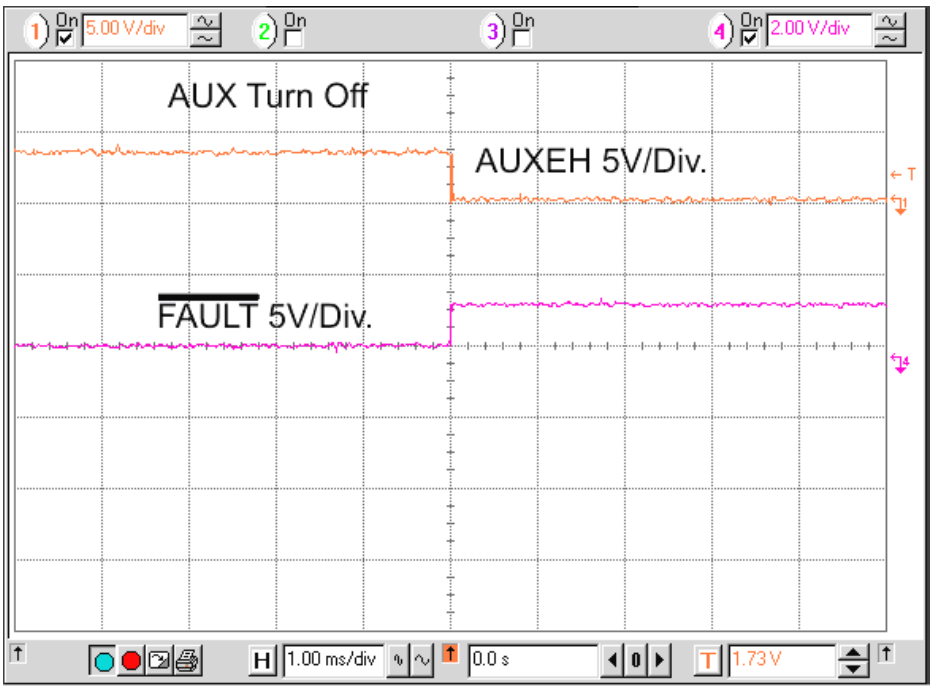

Figure 24. AUX Disable Turn Off - $\overline{\text{FAULT}}$

Copyright © 2006–2010, Texas Instruments Incorporated

Typical Characteristics (continued)

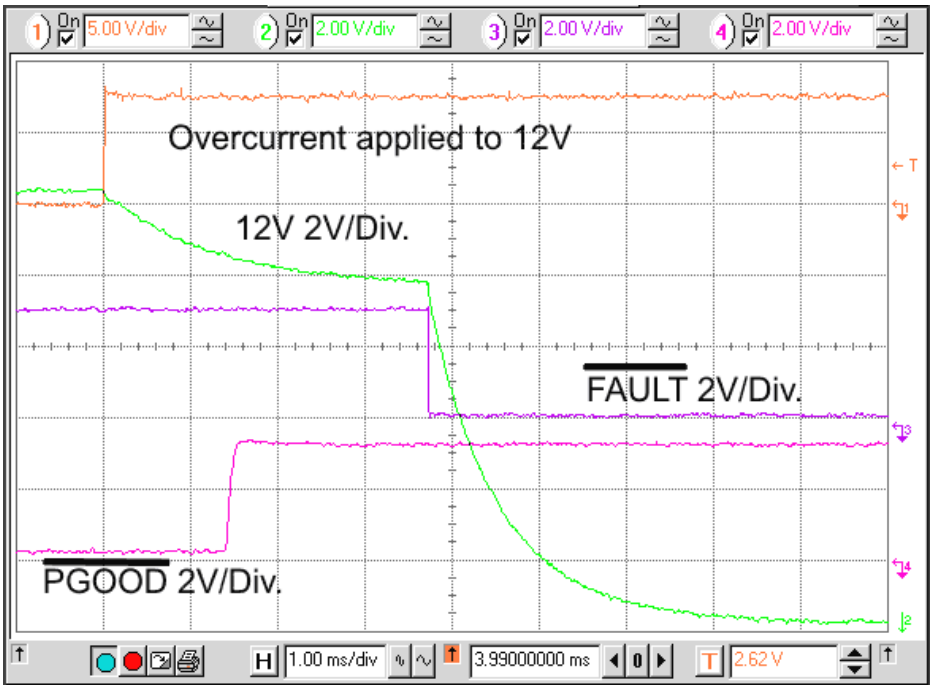

Figure 25. Over Current Applied to 12V

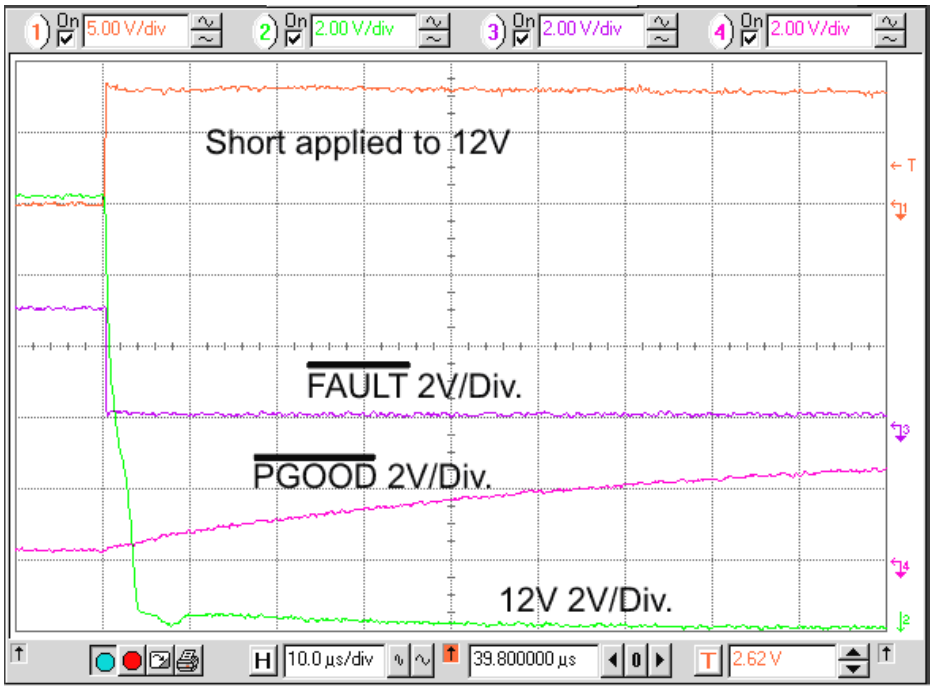

Figure 26. Short Applied to 12V

TAPE AND REEL INFORMATION

REEL DIMENSIONS

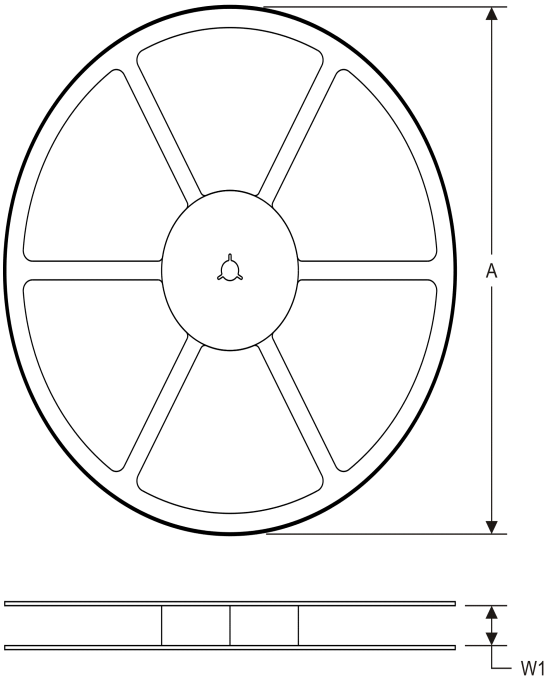

TAPE DIMENSIONS

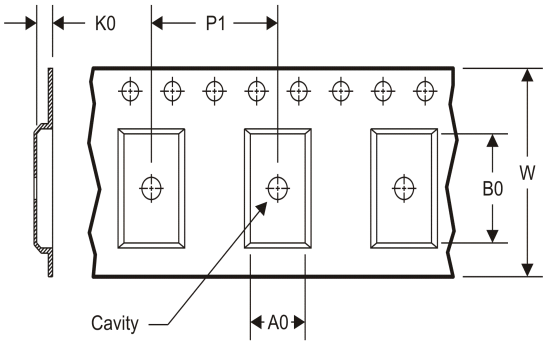

A0	Dimension designed to accommodate the component width
B0	Dimension designed to accommodate the component length
K0	Dimension designed to accommodate the component thickness
W	Overall width of the carrier tape
P1	Pitch between successive cavity centers

TAPE AND REEL INFORMATION

*All dimensions are nominal

Device	Package Type	Package Drawing	Pins	SPQ	Reel Diameter (mm)	Reel Width W1 (mm)	A0 (mm)	B0 (mm)	K0 (mm)	P1 (mm)	W (mm)	Pin1 Quadrant
TPS2363PFBR	TQFP	PFB	48	1000	330.0	16.4	9.6	9.6	1.5	12.0	16.0	Q2

TAPE AND REEL BOX DIMENSIONS

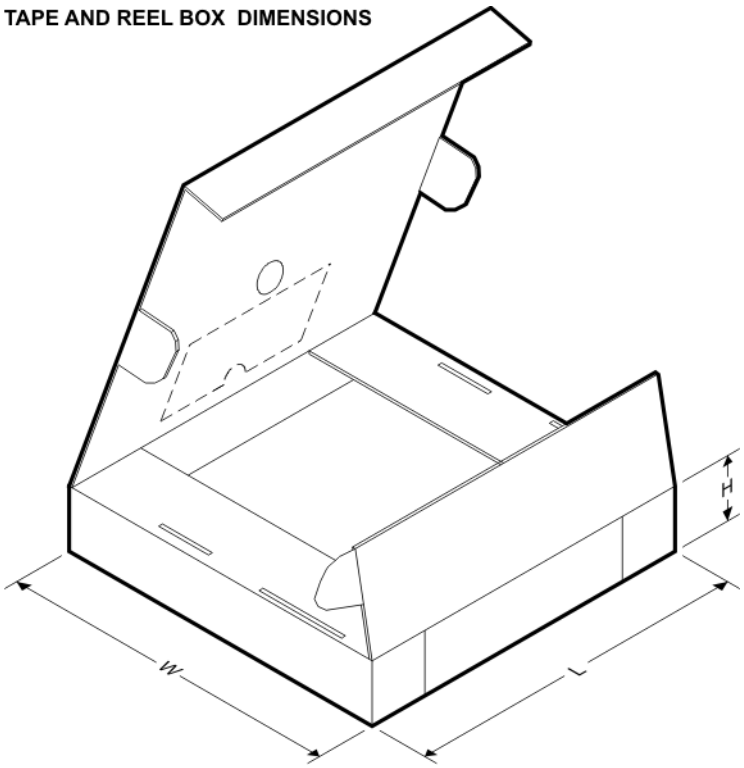

*All dimensions are nominal

Device	Package Type	Package Drawing	Pins	SPQ	Length (mm)	Width (mm)	Height (mm)
TPS2363PFBR	TQFP	PFB	48	1000	367.0	367.0	38.0

MTQF019A – JANUARY 1995 – REVISED JANUARY 1998

PFB (S-PQFP-G48) **PLASTIC QUAD FLATPACK**

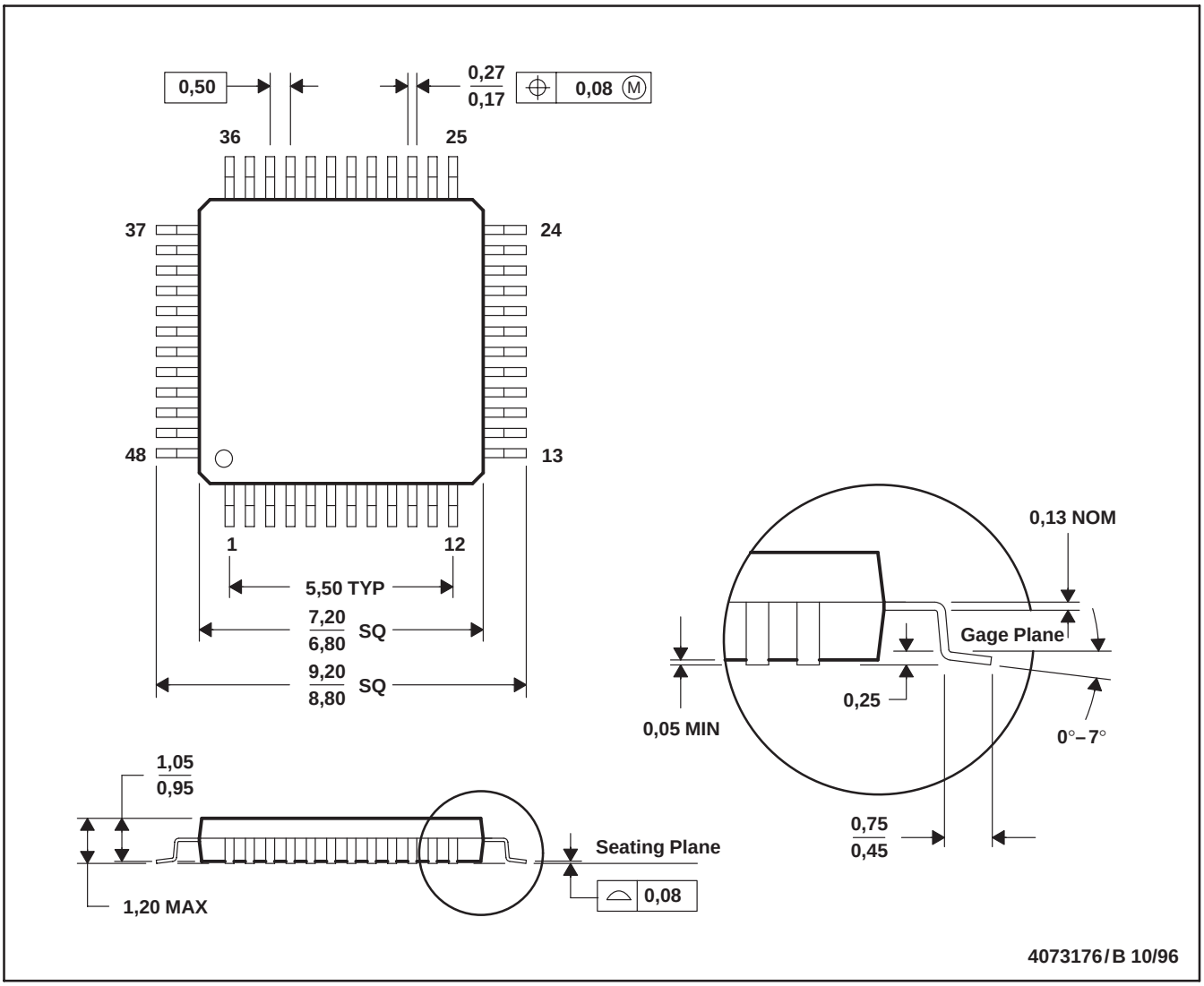

NOTES: A. All linear dimensions are in millimeters.
B. This drawing is subject to change without notice.
C. Falls within JEDEC MS-026

PFB (S–PQFP–G48)

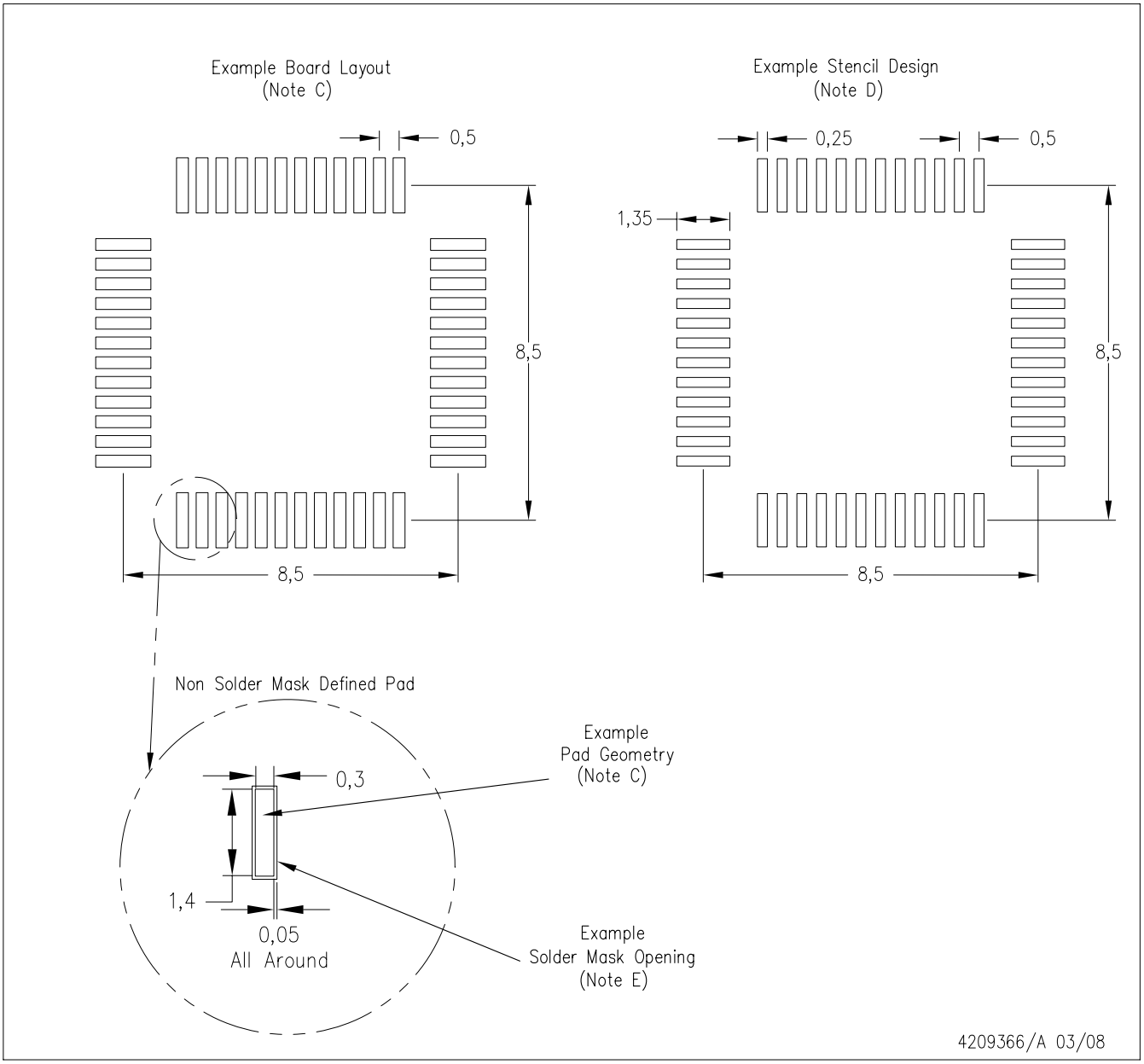

NOTES:
A. All linear dimensions are in millimeters.
B. This drawing is subject to change without notice.
C. Publication IPC–7351 is recommended for alternate designs.
D. Laser cutting apertures with trapezoidal walls and also rounding corners will offer better paste release. Customers should contact their board assembly site for stencil design recommendations. Refer to IPC–7525.
E. Customers should contact their board fabrication site for solder mask tolerances between and around signal pads.

IMPORTANT NOTICE

Texas Instruments Incorporated and its subsidiaries (TI) reserve the right to make corrections, enhancements, improvements and other changes to its semiconductor products and services per JESD46C and to discontinue any product or service per JESD48B. Buyers should obtain the latest relevant information before placing orders and should verify that such information is current and complete. All semiconductor products (also referred to herein as “components”) are sold subject to TI’s terms and conditions of sale supplied at the time of order acknowledgment.

TI warrants performance of its components to the specifications applicable at the time of sale, in accordance with the warranty in TI’s terms and conditions of sale of semiconductor products. Testing and other quality control techniques are used to the extent TI deems necessary to support this warranty. Except where mandated by applicable law, testing of all parameters of each component is not necessarily performed.

TI assumes no liability for applications assistance or the design of Buyers’ products. Buyers are responsible for their products and applications using TI components. To minimize the risks associated with Buyers’ products and applications, Buyers should provide adequate design and operating safeguards.

TI does not warrant or represent that any license, either express or implied, is granted under any patent right, copyright, mask work right, or other intellectual property right relating to any combination, machine, or process in which TI components or services are used. Information published by TI regarding third-party products or services does not constitute a license to use such products or services or a warranty or endorsement thereof. Use of such information may require a license from a third party under the patents or other intellectual property of the third party, or a license from TI under the patents or other intellectual property of TI.

Reproduction of significant portions of TI information in TI data books or data sheets is permissible only if reproduction is without alteration and is accompanied by all associated warranties, conditions, limitations, and notices. TI is not responsible or liable for such altered documentation. Information of third parties may be subject to additional restrictions.

Resale of TI components or services with statements different from or beyond the parameters stated by TI for that component or service voids all express and any implied warranties for the associated TI component or service and is an unfair and deceptive business practice. TI is not responsible or liable for any such statements.

Buyer acknowledges and agrees that it is solely responsible for compliance with all legal, regulatory and safety-related requirements concerning its products, and any use of TI components in its applications, notwithstanding any applications-related information or support that may be provided by TI. Buyer represents and agrees that it has all the necessary expertise to create and implement safeguards which anticipate dangerous consequences of failures, monitor failures and their consequences, lessen the likelihood of failures that might cause harm and take appropriate remedial actions. Buyer will fully indemnify TI and its representatives against any damages arising out of the use of any TI components in safety-critical applications.

In some cases, TI components may be promoted specifically to facilitate safety-related applications. With such components, TI’s goal is to help enable customers to design and create their own end-product solutions that meet applicable functional safety standards and requirements. Nonetheless, such components are subject to these terms.

No TI components are authorized for use in FDA Class III (or similar life-critical medical equipment) unless authorized officers of the parties have executed a special agreement specifically governing such use.

Only those TI components which TI has specifically designated as military grade or “enhanced plastic” are designed and intended for use in military/aerospace applications or environments. Buyer acknowledges and agrees that any military or aerospace use of TI components which have ***not*** been so designated is solely at the Buyer's risk, and that Buyer is solely responsible for compliance with all legal and regulatory requirements in connection with such use.

TI has specifically designated certain components which meet ISO/TS16949 requirements, mainly for automotive use. Components which have not been so designated are neither designed nor intended for automotive use; and TI will not be responsible for any failure of such components to meet such requirements.

Products		**Applications**	
Audio	www.ti.com/audio	Automotive and Transportation	www.ti.com/automotive
Amplifiers	amplifier.ti.com	Communications and Telecom	www.ti.com/communications
Data Converters	dataconverter.ti.com	Computers and Peripherals	www.ti.com/computers
DLP® Products	www.dlp.com	Consumer Electronics	www.ti.com/consumer-apps
DSP	dsp.ti.com	Energy and Lighting	www.ti.com/energy
Clocks and Timers	www.ti.com/clocks	Industrial	www.ti.com/industrial
Interface	interface.ti.com	Medical	www.ti.com/medical
Logic	logic.ti.com	Security	www.ti.com/security
Power Mgmt	power.ti.com	Space, Avionics and Defense	www.ti.com/space-avionics-defense
Microcontrollers	microcontroller.ti.com	Video and Imaging	www.ti.com/video
RFID	www.ti-rfid.com		
OMAP Mobile Processors	www.ti.com/omap	**TI E2E Community**	e2e.ti.com
Wireless Connectivity	www.ti.com/wirelessconnectivity		

Mailing Address: Texas Instruments, Post Office Box 655303, Dallas, Texas 75265
Copyright © 2012, Texas Instruments Incorporated

AMEYA360
Components Supply Platform

Authorized Distribution Brand :

Website :

Welcome to visit www.ameya360.com

Contact Us :

- ### Address :

  401 Building No.5, JiuGe Business Center, Lane 2301, Yishan Rd
  Minhang District, Shanghai , China

- ### Sales :

  Direct +86 (21) 6401-6692

  Email amall@ameya360.com

  QQ 800077892

  Skype ameyasales1 ameyasales2

- ### Customer Service :

  Email service@ameya360.com

- ### Partnership :

  Tel +86 (21) 64016692-8333

  Email mkt@ameya360.com