5.0V, HCMOS, SMD Oscillator

Model: F3345 SERIES **RoHS Compliant / Pb Free** **Rev. 1/29/2014**

http://www.foxonline.com/need_a_sample.htm

Need a Sample®

FEATURES

- 5.0V Operation
- HCMOS/TTL Output
- Tri-State Enable/Disable
- Tape and Reel (2,000 pcs. STD)

OPTIONS

- Standby Function (F4101)

• PART NUMBER SELECTION

Part Number	Model Number	Frequency Stability[1]	Operating Temperature (ºC)	Frequency Range (MHz)
092-Frequency-xxxxx	**F3345**	±100PPM	-10 ~ +70	1.000 ~ 80.000
093-Frequency-xxxxx	**F3345R**	±100PPM	-40 ~ +85	1.000 ~ 80.000
090-Frequency-xxxxx	**F3340**	±50PPM	-10 ~ +70	1.000 ~ 80.000
091-Frequency-xxxxx	**F3340R**	±50PPM	-40 ~ +85	1.000 ~ 80.000
094-Frequency-xxxxx	**F3346**	±25PPM	-10 ~ +70	1.000 ~ 80.000
095-Frequency-xxxxx	**F3346R**	±25PPM*	-40 ~ +85	1.000 ~ 80.000
096-Frequency-xxxxx	**F3348**	±20PPM*	-10 ~ +70	1.000 ~ 80.000

• ELECTRICAL CHARACTERISTICS

PARAMETERS	MAX (unless otherwise noted)
Frequency Range (Fo)	1.000 ~ 80.000 MHz
Storage Temperature Range (Tstg)	-55ºC ~ +125ºC
Supply Voltage (VDD)	5.0V ± 10%
Input Current (IDD)	
1.000 ~ 25.000 MHz	25mA
25.000+ ~ 50.000 MHz	40mA
50.000+ ~ 67.000 MHz	60mA
67.000+ ~ 80.000 MHz	73mA
Output Symmetry (50% VDD)	45% ~ 55%
Rise Time (10% ~ 90% VDD) (TR)	7nS
Fall Time (90% ~ 10% VDD) (TF)	7nS
Output Voltage (VOL)	10% VDD
(VOH)	90% VDD Min
Output Current (IOL)	16mA Min
(IOH)	-16mA Min
Output Load	
TTL	10TTL
HCMOS	50pF
Start-up Time (Ts)	10mS
Enable/Disable Time [2]	100nS
Maximum Soldering Temp / Time	260ºC / 10 Seconds
Moisture Sensitivity Level (MSL)	1
Termination Finish	Au

[1] Inclusive of 25ºC tolerance, operating temperature range, input voltage change, load change, aging, shock, and vibration. *Excludes Shock/Vibration

[2] An internal pullup resistor from pin 1 to pin 4 allows active output if pin 1 is left open.

Note: A 0.01µF bypass capacitor should be placed between VDD (Pin 4) and GND (Pin 2) to minimize power supply line noise.

Drawing is for reference to critical specifications defined by size measurements.

Certain non-critical visual attributes, such as side castellations, reference pin shape, etc. may vary. All specifications subject to change without notice.

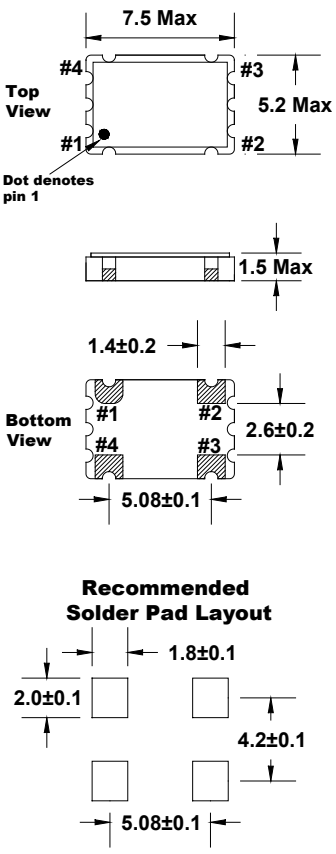

Pin Connections

#1 E/D **#3 Output**
#2 GND **#4 VDD**

All dimensions are in millimeters

• ENABLE / DISABLE FUNCTION

$\overline{\text{INH}}$ (Pin 1)	OUTPUT (Pin 3)
OPEN [2]	ACTIVE
'1' Level VIH ≥ 70% VDD	ACTIVE
'0' Level VIL ≤ 30% VDD	High Z

5.0V, HCMOS, SMD Oscillator

Model: F3345 SERIES **RoHS Compliant / Pb Free** **Rev. 1/29/2014**

http://www.foxonline.com/need_a_sample.htm

Need a Sample®

• TAPE SPECIFICATIONS (millimeters)

MODEL	A	B	C	D	E	F	STD Reel QTY
F3345 Series	∅1.5	4.0	8.0	7.5	16.0	2.15	2,000

• REEL SPECIFICATIONS (millimeters)

MODEL	G	H	I	J	K	L	M
F3345 Series	2.0	∅13	∅21	∅80	∅255	17.5	2.0

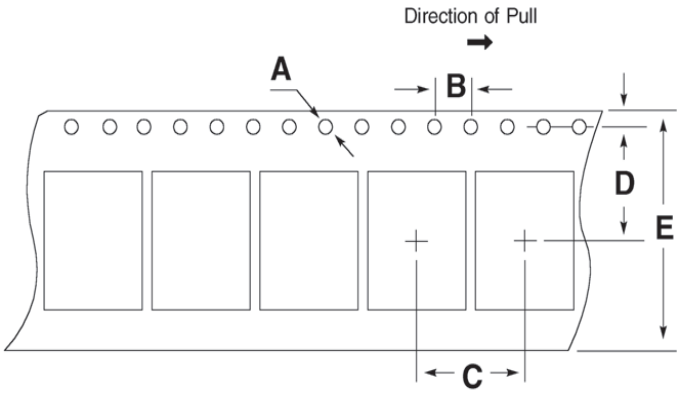

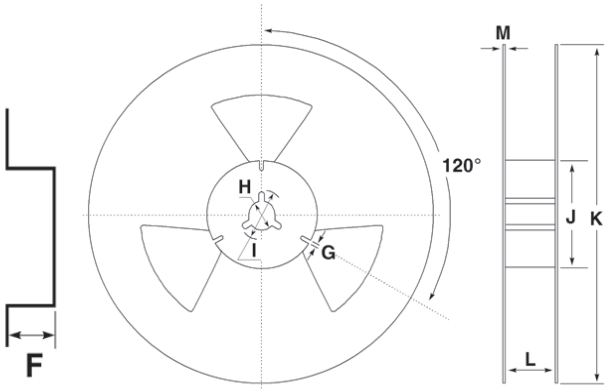

AMEYA360
Components Supply Platform

Authorized Distribution Brand :

Website :

Welcome to visit www.ameya360.com

Contact Us :

- ## Address :

401 Building No.5, JiuGe Business Center, Lane 2301, Yishan Rd
Minhang District, Shanghai , China

- ## Sales :

Direct +86 (21) 6401-6692

Email amall@ameya360.com

QQ 800077892

Skype ameyasales1 ameyasales2

- ## Customer Service :

Email service@ameya360.com

- ## Partnership :

Tel +86 (21) 64016692-8333

Email mkt@ameya360.com