Series FMS
8 Pin SIM Card Reader (Push / Push with Switch)

Specifications

Insulation Resistance:	500MΩ min. at 500V DC
Withstanding Voltage:	500V ACrms for 1 minute
Contact Resistance:	100mΩ max. at 1mA / 20mV max.
Current Rating:	0.5A
Voltage Rating.	5.0Vrms
Operating Temp. Range:	-55°C to +85°C
Mating Cycles:	5,000 insertions

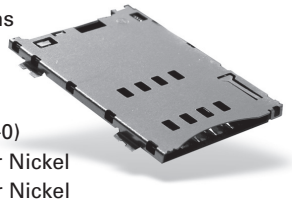

Materials and Finish

Insulator:	LCP, glass filled (UL94V-0)
Contact Plating:	Mating Face - Gold over Nickel
	Solder Tails - Gold over Nickel

Part Number (Details)

FMS008 - 6001 - 0

Series No.

Design No.

Features

- 8 SIM contacts
- Super low profile of 1.5mm
- With switch
- Top Mount for SMT soldering
- Smooth extraction function by Push/Push mechanism
- Tape & Reel packaging 1,000 pcs per reel

Outline Dimensions for FMS008-6001-0

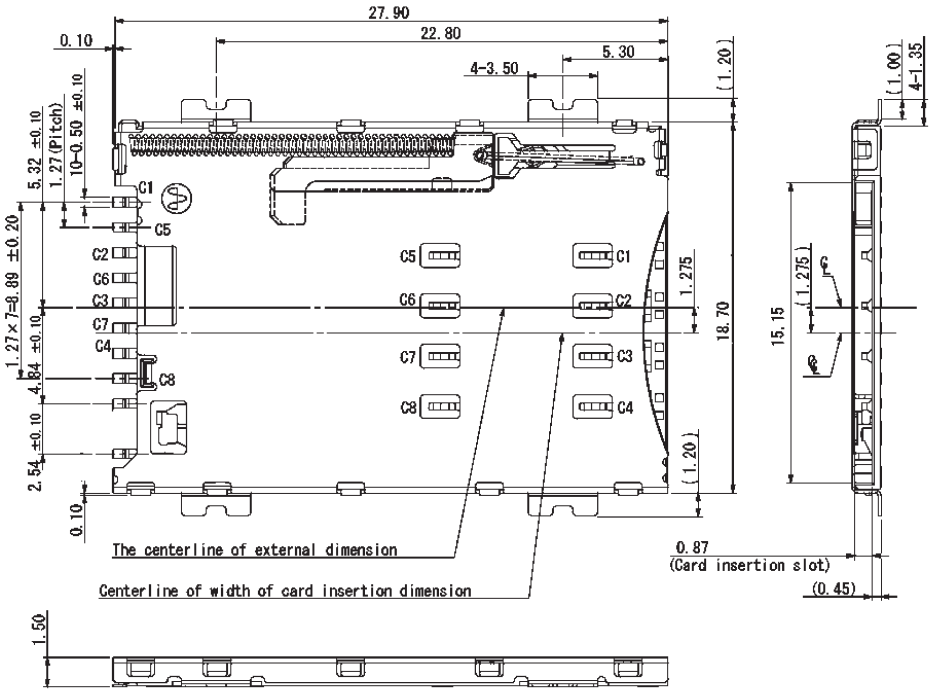

Recommended PCB Layout

Top View

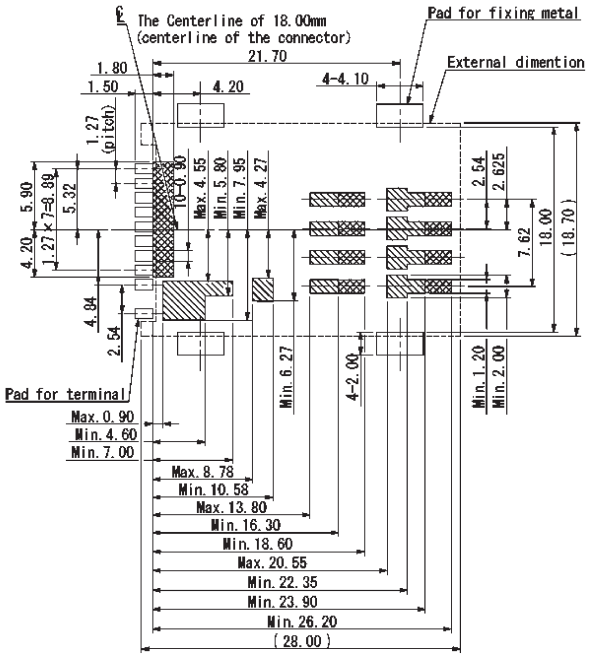

Card Insertion Details

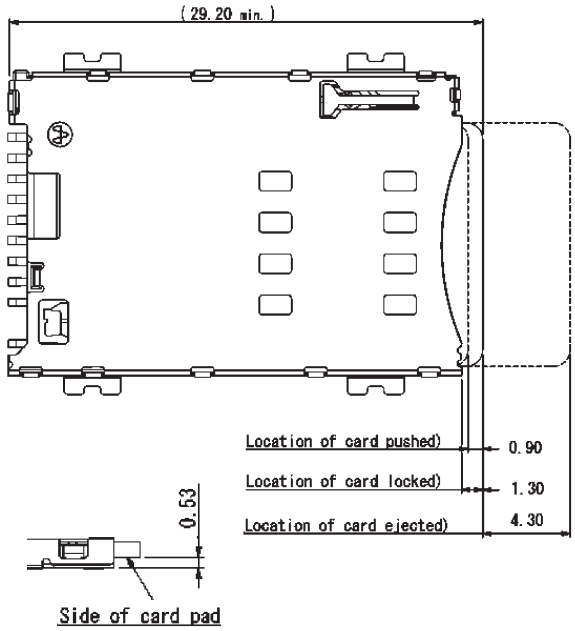

AMEYA360
Components Supply Platform

Authorized Distribution Brand :

Website :

Welcome to visit www.ameya360.com

Contact Us :

- ### Address :

  401 Building No.5, JiuGe Business Center, Lane 2301, Yishan Rd
  Minhang District, Shanghai , China

- ### Sales :

  Direct +86 (21) 6401-6692

  Email amall@ameya360.com

  QQ 800077892

  Skype ameyasales1 ameyasales2

- ### Customer Service :

  Email service@ameya360.com

- ### Partnership :

  Tel +86 (21) 64016692-8333

  Email mkt@ameya360.com