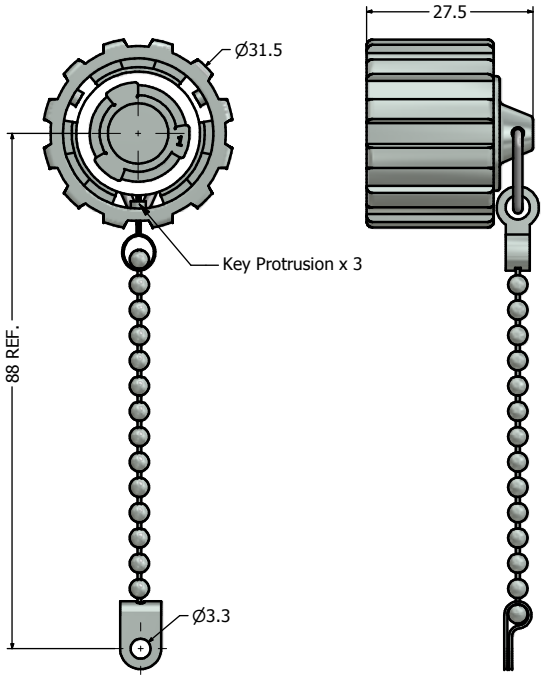

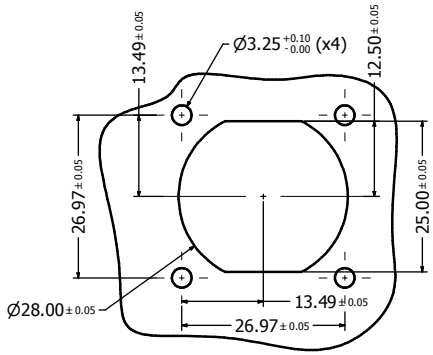

Recommended Double-D Panel Cutout

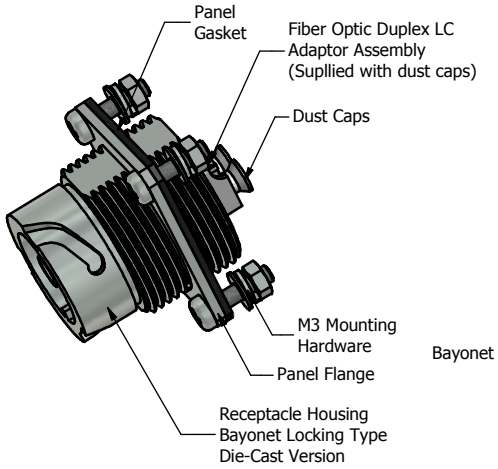

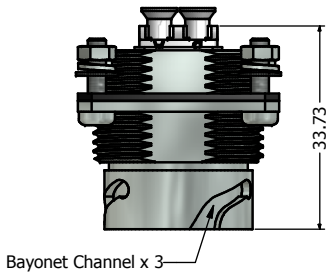

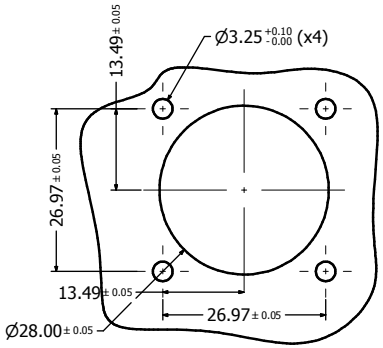

Recommanded Round Panel Cutout

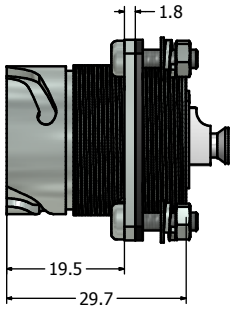

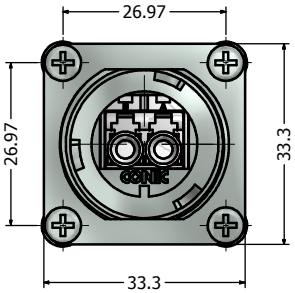

Notes:

1. Material and Finish:
   - Receptacle Housing & Protective Cover: Die-Cast, Nickel Plated
   - Panel Gasket: NBR, Color: Black
   - M3 Mounting Hardware: Stainless Steel
     includes 4 x (screw + nut + flat washer + spring lock washer)
   - Cover Gasket: Silcon, Color: White
   - Ball Chain Assembly, Copper Alloy and Stainless steel, Nickel Plated

   Duplex LC Adaptor Assembly:
   - Housing: Mod. PPO , UL94 V-0, Color:
     SM Blue/MM Beige/APC SM Green
   - Alignment Sleeves: SM Ceramic/MM Phosphor Bronze
   - Dust Cap: PP, Color: Neutral transparent
   - Operating Temperature: -40°C to +85°C
2. Connector can be front or rear mounted to a maximum panel thickness of 3.2mm.
3. IP67 when covered or fully mated with the appropriate mating connector
4. Hardware shipped unassembled

Description	Part Number
Nickel Plated Die-Cast Duplex LC Single Mode Receptacle + Cover Assembly	17-300700
Nickel Plated Die-Cast Duplex LC Multi Mode Receptacle Cover Assembly	17-300710
Nickel Plated Die-cast Duplex LC APC Single Mode Receptacle Cover Assembly	17-300720

Directive 2002/95/EC RoHS Compliant

THIS DRAWING MAY NOT BE COPIED OR REPRODUCED IN ANY WAY OR DISCLOSED TO A THIRD PARTY WITHOUT WRITTEN PERMISSION. OWNERSHIP AND COPYRIGHT OF CONEC CORPORATION.

DOT NOT ALTER CAD DRAWING BY HAND

Customer:

Name	Title	Approval Date

Rev.	Changes	Date	Name
a	original		

Tolerance
Unless otherwise specified
0 PLC ± 0.30
1 PLC ± 0.20
2 PLC ± 0.10
3 PLC ± 0.05
ANGLES ± 1°

Autodesk Inventor

	Date	Name
2012		
Draw.	Apr. 17	Vincent Ke
Appd.	Apr. 17	J. Chaudry
Norm		
D-old		

CONEC®

Scale:

Dim. in mm

Material: See Notes

Title: IP67 Industrial Duplex LC Receptacle (with Flange) + Cover Kit
Nickel Plated Zinc Die-Cast Version

Drawing No.: 17K1A327

DIN A3

Part No.: SEE PART NUMBER TABLE

Sheet 1/1

AMEYA360
Components Supply Platform

Authorized Distribution Brand :

Website :

Welcome to visit www.ameya360.com

Contact Us :

- ### Address :

  401 Building No.5, JiuGe Business Center, Lane 2301, Yishan Rd
  Minhang District, Shanghai , China

- ### Sales :

  Direct +86 (21) 6401-6692

  Email amall@ameya360.com

  QQ 800077892

  Skype ameyasales1 ameyasales2

- ### Customer Service :

  Email service@ameya360.com

- ### Partnership :

  Tel +86 (21) 64016692-8333

  Email mkt@ameya360.com