Low-Power SoC (System-on-Chip) with MCU, Memory, Sub-1 GHz RF Transceiver, and USB Controller

Applications

- *Low-power SoC wireless applications operating in the 315/433/868/915 MHz ISM/SRD bands*
- *Wireless alarm and security systems*
- *Industrial monitoring and control*
- *Wireless sensor networks*
- *AMR - Automatic Meter Reading*
- *Home and building automation*
- *Low power telemetry*
- ***CC1111Fx**: USB dongles*

Product Description

The ***CC1110Fx/CC1111Fx*** is a true low-power sub-1 GHz system-on-chip (SoC) designed for low-power wireless applications. The ***CC1110Fx/CC1111Fx*** combines the excellent performance of the state-of-the-art RF transceiver ***CC1101*** with an industry-standard enhanced 8051 MCU, up to 32 kB of in-system programmable flash memory and up to 4 kB of RAM, and many other powerful features. The small 6x6 mm package makes it very suited for applications with size limitations.

The ***CC1110Fx/CC1111Fx*** is highly suited for systems where very low power consumption is required. This is ensured by several advanced low-power operating modes. The ***CC1111Fx*** adds a full-speed USB 2.0 interface to the feature set of the ***CC1110Fx***. Interfacing to a PC using the USB interface is quick and easy, and the high data rate (12 Mbps) of the USB interface avoids the bottlenecks of RS-232 or low-speed USB interfaces.

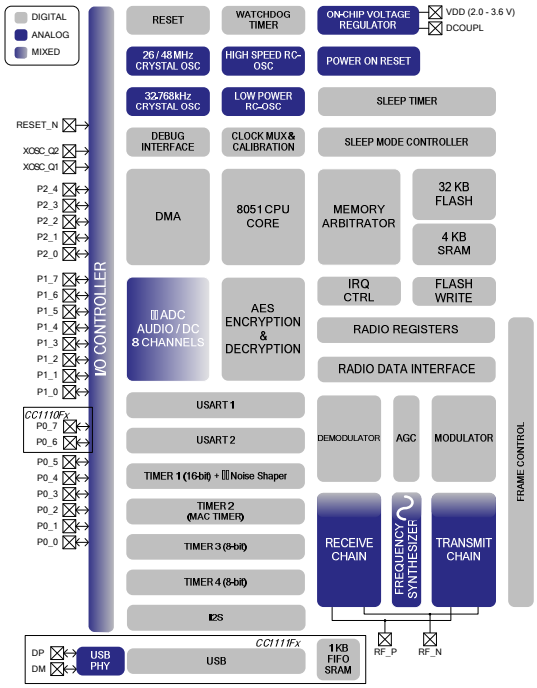

Key Features

- **Radio**
  - o High-performance RF transceiver based on the market-leading ***CC1101***
  - o Excellent receiver selectivity and blocking performance
  - o High sensitivity (−110
  - o dBm at 1.2 kBaud)
  - o Programmable data rate up to 500 kBaud
  - o Programmable output power up to 10 dBm for all supported frequencies
  - o Frequency range: 300 - 348 MHz, 391 - 464 MHz and 782 - 928 MHz
  - o Digital RSSI / LQI support
- **Low Power**
  - o Low current consumption (RX: 16.2 mA @ 1.2 kBaud, TX: 15.2 mA @ −6 dBm output power)
  - o 0.3 µA in PM3 (the operating mode with the lowest power consumption)
  - o 0.5 µA in PM2 (operating mode with the second lowest power consumption, timer or external interrupt wakeup)
- **MCU, Memory, and Peripherals**
  - o High performance and low power 8051 microcontroller core.
  - o Powerful DMA functionality
  - o 8/16/32 KB in-system programmable flash, and 1/2/4 KB RAM
  - o Full-Speed USB Controller with 1 KB FIFO (***CC1111Fx***)
  - o 128-bit AES security coprocessor
  - o 7 - 12 bit ADC with up to eight inputs
  - o I^2S interface
  - o Two USARTs
  - o 16-bit timer with DSM mode
  - o Three 8-bit timers
  - o Hardware debug support
  - o 21 (***CC1110Fx***) or 19 (***CC1111Fx***) GPIO pins
  - o SW compatible with ***CC2510Fx/CC2511Fx***
- **General**
  - o Wide supply voltage range (2.0V - 3.6V)
  - o RoHS compliant 6x6 mm QFN 36 package

Table of Contents

ABBREVIATION **4**

1 REGISTER CONVENTIONS **5**

2 KEY FEATURES (IN MORE DETAILS) **5**

2.1 HIGH-PERFORMANCE AND LOW-POWER 8051-COMPATIBLE MICROCONTROLLER 5
2.2 8/16/32 KB NON-VOLATILE PROGRAM MEMORY AND 1/2/4 KB DATA MEMORY 5
2.3 FULL-SPEED USB CONTROLLER (CC1111Fx) 5
2.4 I^2S INTERFACE 5
2.5 HARDWARE AES ENCRYPTION/DECRYPTION 6
2.6 PERIPHERAL FEATURES 6
2.7 LOW POWER 6
2.8 SUB-1 GHZ RADIO WITH BASEBAND MODEM 6

3 ABSOLUTE MAXIMUM RATINGS **7**

4 OPERATING CONDITIONS **8**

4.1 CC1110Fx OPERATING CONDITIONS 8
4.2 CC1111Fx OPERATING CONDITIONS 8

5 GENERAL CHARACTERISTICS **8**

6 ELECTRICAL SPECIFICATIONS **9**

6.1 CURRENT CONSUMPTION 9
6.2 RF RECEIVE SECTION 13
6.3 RF TRANSMIT SECTION 17
6.4 CRYSTAL OSCILLATORS 19
6.5 32.768 KHZ CRYSTAL OSCILLATOR 20
6.6 LOW POWER RC OSCILLATOR 20
6.7 HIGH SPEED RC OSCILLATOR 21
6.8 FREQUENCY SYNTHESIZER CHARACTERISTICS 21
6.9 ANALOG TEMPERATURE SENSOR 22
6.10 7 - 12 BIT ADC 23
6.11 CONTROL AC CHARACTERISTICS 25
6.12 SPI AC CHARACTERISTICS 26
6.13 DEBUG INTERFACE AC CHARACTERISTICS 27
6.14 PORT OUTPUTS AC CHARACTERISTICS 27
6.15 TIMER INPUTS AC CHARACTERISTICS 28
6.16 DC CHARACTERISTICS 28

7 PIN AND I/O PORT CONFIGURATION **29**

8 CIRCUIT DESCRIPTION **33**

8.1 CPU AND PERIPHERALS 34
8.2 RADIO 36

9 APPLICATION CIRCUIT **36**

9.1 BIAS RESISTOR 36
9.2 BALUN AND RF MATCHING 36
9.3 CRYSTAL 36
9.4 REFERENCE SIGNAL 37
9.5 USB (CC1111Fx) 37
9.6 POWER SUPPLY DECOUPLING 37
9.7 PCB LAYOUT RECOMMENDATIONS 41

10 8051 CPU **41**

10.1 8051 INTRODUCTION 41
10.2 MEMORY 42
10.3 CPU REGISTERS 54
10.4 INSTRUCTION SET SUMMARY 56
10.5 INTERRUPTS 60

11 DEBUG INTERFACE **70**

11.1 DEBUG MODE 70
11.2 DEBUG COMMUNICATION 70
11.3 DEBUG LOCK BIT 71

11.4 DEBUG COMMANDS 72
12 PERIPHERALS 76
12.1 POWER MANAGEMENT AND CLOCKS 76
12.2 RESET 83
12.3 FLASH CONTROLLER 84
12.4 I/O PORTS 90
12.5 DMA CONTROLLER 101
12.6 16-BIT TIMER, TIMER 1 112
12.7 MAC TIMER (TIMER 2) 124
12.8 SLEEP TIMER 126
12.9 8-BIT TIMERS, TIMER 3 AND TIMER 4 129
12.10 ADC 140
12.11 RANDOM NUMBER GENERATOR 146
12.12 AES COPROCESSOR 147
12.13 WATCHDOG TIMER 150
12.14 USART 152
12.15 I^2S 161
12.16 USB CONTROLLER 169
13 RADIO 185
13.1 COMMAND STROBES 185
13.2 RADIO REGISTERS 187
13.3 INTERRUPTS 187
13.4 TX/RX DATA TRANSFER 189
13.5 DATA RATE PROGRAMMING 190
13.6 RECEIVER CHANNEL FILTER BANDWIDTH 190
13.7 DEMODULATOR, SYMBOL SYNCHRONIZER, AND DATA DECISION 191
13.8 PACKET HANDLING HARDWARE SUPPORT 192
13.9 MODULATION FORMATS 195
13.10 RECEIVED SIGNAL QUALIFIERS AND LINK QUALITY INFORMATION 196
13.11 FORWARD ERROR CORRECTION WITH INTERLEAVING 200
13.12 RADIO CONTROL 201
13.13 FREQUENCY PROGRAMMING 204
13.14 VCO 205
13.15 OUTPUT POWER PROGRAMMING 205
13.16 SHAPING AND PA RAMPING 206
13.17 SELECTIVITY 207
13.18 SYSTEM CONSIDERATIONS AND GUIDELINES 208
13.19 RADIO REGISTERS 211
14 VOLTAGE REGULATORS 229
14.1 VOLTAGE REGULATOR POWER-ON 229
15 RADIO TEST OUTPUT SIGNALS 229
16 REGISTER OVERVIEW 231
17 PACKAGE DESCRIPTION (QFN 36) 235
17.1 RECOMMENDED PCB LAYOUT FOR PACKAGE (QFN 36) 236
17.2 SOLDERING INFORMATION 236
17.3 TRAY SPECIFICATION 236
17.4 CARRIER TAPE AND REEL SPECIFICATION 237
18 ORDERING INFORMATION 237
19 REFERENCES 238
20 GENERAL INFORMATION 239
20.1 DOCUMENT HISTORY 239
20.2 PRODUCT STATUS DEFINITIONS 242
21 ADDRESS INFORMATION 243
22 TI WORLDWIDE TECHNICAL SUPPORT 243

Abbreviation

ΔΣ	Delta-Sigma
ADC	Analog to Digital Converter
AES	Advanced Encryption Standard
AGC	Automatic Gain Control
ARIB	Association of Radio Industries and Businesses
ASK	Amplitude Shift Keying
BCD	Binary Coded Decimal
BER	Bit Error Rate
BOD	Brown Out Detector
CBC	Cipher Block Chaining
CBC-MAC	Cipher Block Chaining Message Authentication Code
CCA	Clear Channel Assessment
CCM	Counter mode + CBC-MAC
CFB	Cipher Feedback
CFR	Code of Federal Regulations
CMOS	Complementary Metal Oxide Semiconductor
CPU	Central Processing Unit
CRC	Cyclic Redundancy Check
CTR	Counter mode (encryption)
DAC	Digital to Analog Converter
DMA	Direct Memory Access
DSM	Delta-Sigma Modulator
ECB	Electronic Code Book
EM	Evaluation Module
ENOB	Effective Number of Bits
EP{0 - 5}	USB Endpoints 0 - 5
ESD	Electro Static Discharge
ESR	Equivalent Series Resistance
ETSI	European Telecommunications Standard Institute
FCC	Federal Communications Commission
FIFO	First In First Out
GPIO	General Purpose Input / Output
HSSD	High Speed Serial Debug
HW	Hardware
I/O	Input / Output
I/Q	In-phase / Quadrature-phase
I^2S	Inter-IC Sound
IF	Intermediate Frequency
IOC	I/O Controller
ISM	Industrial, Scientific and Medical
ISR	Interrupt Service Routine
IV	Initialization Vector
JEDEC	Joint Electron Device Engineering Council
KB	Kilo Bytes (1024 bytes)
kbps	kilo bits per second
LFSR	Linear Feedback Shift Register
LNA	Low-Noise Amplifier
LO	Local Oscillator
LQI	Link Quality Indication
LSB	Least Significant Bit / Byte
MAC	Medium Access Control
MCU	Microcontroller Unit
MISO	Master In Slave Out
MOSI	Master Out Slave In
MSB	Most Significant Bit / Byte
NA	Not Applicable
OFB	Output Feedback (encryption)
OOK	On-Off Keying
PA	Power Amplifier
PCB	Printed Circuit Board
PER	Packet Error Rate
PLL	Phase Locked Loop
PM{0 - 3}	Power Mode 0 -3
PMC	Power Management Controller
POR	Power On Reset
PQI	Preamble Quality Indicator
PWM	Pulse Width Modulator
QLP	Quad Leadless Package
RAM	Random Access Memory
RCOSC	RC Oscillator
RF	Radio Frequency
RoHS	Restriction on Hazardous Substances
RSSI	Receive Signal Strength Indicator
RX	Receive
SCK	Serial Clock
SFD	Start of Frame Delimiter
SFR	Special Function Register
SINAD	Signal-to-noise and distortion ratio
SPI	Serial Peripheral Interface
SRAM	Static Random Access Memory
SW	Software
T/R	Transmit / Receive
TX	Transmit
UART	Universal Asynchronous Receiver/Transmitter
USART	Universal Synchronous/Asynchronous Receiver/Transmitter
USB	Universal Serial Bus
VCO	Voltage Controlled Oscillator
VGA	Variable Gain Amplifier
WDT	Watchdog Timer
XOSC	Crystal Oscillator

1 Register Conventions

Each SFR is described in a separate table. The table heading is given in the following format:

REGISTER NAME (SFR Address) - Register Description.

Each RF register is described in a separate table. The table heading is given in the following format:

XDATA Address: REGISTER NAME - Register Description

All register descriptions include a symbol denoted R/W describing the accessibility of each bit in the register. The register values are always given in binary notation unless prefixed by '0x', which indicates hexadecimal notation.

Symbol	Access Mode
R/W	Read/write
R	Read only
R0	Read as 0
R1	Read as 1
W	Write only
W0	Write as 0
W1	Write as 1
H0	Hardware clear
H1	Hardware set

Table 1: Register Bit Conventions

2 Key Features (in more details)

2.1 High-Performance and Low-Power 8051-Compatible Microcontroller

- Optimized 8051 core which typically gives 8x the performance of a standard 8051
- Two data pointers
- In-circuit interactive debugging is supported by the IAR Embedded Workbench through a simple two-wire serial interface
- SW compatible with CC2510Fx/CC2511Fx

2.2 8/16/32 KB Non-volatile Program Memory and 1/2/4 kB Data Memory

- 8, 16, or 32 KB of non-volatile flash memory, in-system programmable through a simple two-wire interface or by the 8051 core
- Minimum flash memory endurance: 1000 write/erase cycles
- Programmable read and write lock of portions of flash memory for software security
- 1, 2, or 4 kB of internal SRAM

2.3 Full-Speed USB Controller (CC1111Fx)

- 5 bi-directional endpoints in addition to control endpoint 0
- Full-Speed, 12 Mbps transfer rate
- Support for Bulk, Interrupt, and Isochronous endpoints
- 1024 bytes of dedicated endpoint FIFO memory
- 8 - 512 byte data packet size supported
- Configurable FIFO size for IN and OUT direction of endpoint

2.4 I^2S Interface

- Industry standard I^2S interface for transfer of digital audio data
- Full duplex
- Mono and stereo support
- Configurable sample rate and sample size
- Support for μ-law compression and expansion

- Typically used to connect to external DAC or ADC

2.5 Hardware AES Encryption/Decryption

- 128-bit AES supported in hardware coprocessor

2.6 Peripheral Features

- Powerful DMA Controller
- Power On Reset/Brown-Out Detection
- ADC with eight individual input channels, single-ended or differential (CC1111Fx has six channels) and configurable resolution
- Programmable watchdog timer
- Five timers: one general 16-bit timer with DSM mode, two general 8-bit timers, one MAC timer, and one sleep timer
- Two programmable USARTs for master/slave SPI or UART operation
- 21 configurable general-purpose digital I/O-pins (CC1111Fx has 19)
- Random number generator

2.7 Low Power

- Four flexible power modes for reduced power consumption
- System can wake up on external interrupt or when the Sleep Timer expires
- 0.5 µA current consumption in PM2, where external interrupts or the Sleep Timer can wake up the system
- 0.3 µA current consumption in PM3, where external interrupts can wake up the system
- Low-power fully static CMOS design
- System clock source is either a high speed crystal oscillator (26 - 27 MHz for CC1110Fx and 48 MHz for CC1111Fx) or a high speed RC oscillator (13 - 13.5 MHz for CC1110Fx and 12 MHz for CC1111Fx). The high speed crystal oscillator must be used when the radio is active.
- Clock source for ultra-low power operation can be either a low-power RC oscillator or an optional 32.768 kHz crystal oscillator
- Very fast transition to active mode from power modes enables ultra low average power consumption in low duty-cycle systems

2.8 Sub-1 GHz Radio with Baseband Modem

- Based on the industry leading CC1101 radio core
- Few external components: On-chip frequency synthesizer, no external filters or RF switch needed
- Flexible support for packet oriented systems: On-chip support for sync word detection, address check, flexible packet length, and automatic CRC handling
- Supports use of DMA for both RX and TX resulting in minimal CPU intervention even on high data rates
- Programmable channel filter bandwidth
- 2-FSK, GFSK, MSK, ASK, and OOK modulation formats supported
- Optional automatic whitening and de-whitening of data
- Programmable Carrier Sense (CS) indicator
- Programmable Preamble Quality Indicator (PQI) for detecting preambles and improved protection against sync word detection in random noise
- Support for automatic Clear Channel Assessment (CCA) before transmitting (for listen-before-talk systems)
- Support for per-package Link Quality Indication (LQI)

3 Absolute Maximum Ratings

Under no circumstances must the absolute maximum ratings given in Table 2 be violated. Stress exceeding one or more of the limiting values may cause permanent damage to the device.

Parameter	Min	Max	Units	Condition
Supply voltage (VDD)	−0.3	3.9	V	All supply pins must have the same voltage
Voltage on any digital pin	−0.3	VDD + 0.3, max 3.9	V	
Voltage on the pins RF_P, RF_N and DCOUPL	−0.3	2.0	V	
Voltage ramp-up rate		120	kV/µs	
Input RF level		10	dBm	
Storage temperature range	−50	150	°C	Device not programmed
Solder reflow temperature		260	°C	According to IPC/JEDEC J-STD-020D
ESD CC1110Fx		1000	V	According to JEDEC STD 22, method A114, Human Body Model (HBM)
ESD CC1110Fx		750	V	According to JEDEC STD 22, C101C, Charged Device Model (CDM)
ESD CC1111x		750	V	According to JEDEC STD 22, method A114, Human Body Model (HBM)
ESD CC1111x		750	V	According to JEDEC STD 22, C101C, Charged Device Model (CDM)

Table 2: Absolute Maximum Ratings

Caution! *ESD sensitive device. Precaution should be used when handling the device in order to prevent permanent damage.*

4 Operating Conditions

4.1 CC1110Fx Operating Conditions

The operating conditions for CC1110Fx are listed in Table 3 below.

Parameter	Min	Max	Unit	Condition
Operating ambient temperature, T_A	−40	85	°C	
Operating supply voltage (VDD)	2.0	3.6	V	All supply pins must have the same voltage

Table 3: Operating Conditions for CC1110Fx

4.2 CC1111Fx Operating Conditions

The operating conditions for CC1111Fx are listed in Table 4 below.

Parameter	Min	Max	Unit	Condition
Operating ambient temperature, T_A	0	85	°C	
Operating supply voltage (VDD)	3.0	3.6	V	All supply pins must have the same voltage

Table 4: Operating Conditions for CC1111Fx

5 General Characteristics

T_A = 25°C, VDD = 3.0 V if nothing else stated

Parameter	Min	Typ	Max	Unit	Condition/Note
Radio part					
Frequency range	300		348	MHz	
	391		464	MHz	
	782		928	MHz	
Data rate	1.2 1.2 26		500 250 500	kBaud kBaud kBaud	2-FSK (500 kBaud only characterized @ 915 MHz on CC1110Fx) GFSK, OOK, and ASK (Shaped) MSK (also known as differential offset QPSK) 500 kBaud only characterized @ 915 MHz Optional Manchester encoding (the data rate in kbps will be half the baud rate)
Wake-Up Timing					
PM1 → Active Mode		4		µs	Digital regulator on. HS RCOSC and high speed crystal oscillator off. 32.768 kHz XOSC or low power RCOSC running. `SLEEP.OSC_PD=1` and `CLKCON.OSC=1`
PM2/3→ Active Mode		100		µs	Digital regulator off. HS RCOSC and high speed crystal oscillator off. 32.768 kHz XOSC or low power RCOSC running (PM2). No crystal oscillators or RC oscillators are running in PM3 `SLEEP.OSC_PD=1` and `CLKCON.OSC=1`

Table 5: General Characteristics

6 Electrical Specifications

6.1 Current Consumption

T_A = 25°C, VDD = 3.0 V if nothing else stated. All measurement results are obtained using the CC1110EM reference design ([1]).

Parameter	Min	Typ	Max	Unit	Condition
Active mode, full speed (high speed crystal oscillator)[1]. Low CPU activity.		5.0 4.8		mA mA	System clock running at 26 MHz. System clock running at 24 MHz. Digital regulator on. High speed crystal oscillator and low power RCOSC running. No peripherals running. Low CPU activity: No flash access (i.e. only cache hit), no RAM access
Active mode, full speed (HS RCOSC)[1]. Low CPU activity.		2.5		mA	System clock running at 13 MHz. Digital regulator on. HS RCOSC and low power RCOSC running. No peripherals running. Low CPU activity: No flash access (i.e. only cache hit), no RAM access
Active mode with radio in RX, 315 MHz					Digital regulator on. High speed crystal oscillator and low power RCOSC running. Radio in RX mode (sensitivity optimized `MDMCFG2.DEM_DCFILT_OFF=0`)
		19 19.5 16.2		mA mA mA	1.2 kBaud, input at sensitivity limit, system clock running at 26 MHz. 1.2 kBaud, input at sensitivity limit, system clock running at 24 MHz 1.2 kBaud, input at sensitivity limit, system clock running at 203 kHz.
		19 19.4		mA mA	1.2 kBaud, input well above sensitivity limit, system clock running at 26 MHz 1.2 kBaud, input well above sensitivity limit, system clock running at 24 MHz
		19 16.2		mA mA	38.4 kBaud, input at sensitivity limit, system clock running at 26 MHz. 38.4 kBaud, input at sensitivity limit, system clock running at 203 kHz.
		19		mA	38.4 kBaud, input well above sensitivity limit, system clock running at 26 MHz.
		20 21 17.2		mA mA mA	250 kBaud, input at sensitivity limit, system clock running at 26 MHz 250 kBaud, input at sensitivity limit, system clock running at 24 MHz. 250 kBaud, input at sensitivity limit, system clock running at 1.625 MHz.
		20 20		mA mA	250 kBaud, input well above sensitivity limit, system clock running at 26 MHz. 250 kBaud, input well above sensitivity limit, system clock running at 24 MHz.

[1] *Note: In order to reduce the current consumption in active mode, the clock speed can be reduced by setting `CLKCON.CLKSPD≠000` (see section 12.1 for details).Figure 1 shows typical current consumption in active mode for different clock speeds*

Parameter	Min	Typ	Max	Unit	Condition
Active mode with radio in RX, 433 MHz					Digital regulator on. High speed crystal oscillator and low power RCOSC running. Radio in RX mode (sensitivity optimized `MDMCFG2.DEM_DCFILT_OFF=0`)
		19.8		mA	1.2 kBaud, input at sensitivity limit, system clock running at 26 MHz.
		19.7		mA	1.2 kBaud, input at sensitivity limit, system clock running at 24 MHz.
		17.1		mA	1.2 kBaud, input at sensitivity limit, system clock running at 203 kHz.
		19.8		mA	1.2 kBaud, input well above sensitivity limit, system clock running at 26 MHz.
		19.7		mA	1.2 kBaud, input well above sensitivity limit, system clock running at 24 MHz.
		19.8		mA	38.4 kBaud, input at sensitivity limit, system clock running at 26 MHz.
		17.1		mA	38.4 kBaud, input at sensitivity limit, system clock running at 203 kHz
		19.8		mA	38.4 kBaud, input well above sensitivity limit, system clock running at 26 MHz.
		20.5		mA	250 kBaud, input at sensitivity limit, system clock running at 26 MHz.
		21.5		mA	250 kBaud, input at sensitivity limit, system clock running at 24 MHz.
		18.1		mA	250 kBaud, input at sensitivity limit, system clock running at 1.625 MHz.
		20.5		mA	250 kBaud, input well above sensitivity limit, system clock running at 26 MHz.
		20.2		mA	250 kBaud, input well above sensitivity limit, system clock running at 24 MHz
					See Figure 2 for typical variation over operating conditions
Active mode with radio in RX, 868, 915 MHz					Digital regulator on. High speed crystal oscillator and low power RCOSC running. Radio in RX mode (sensitivity optimized `MDMCFG2.DEM_DCFILT_OFF=0`). 24 MHz system clock not measured
		19.7		mA	1.2 kBaud, input at sensitivity limit, system clock running at 26 MHz.
		17.0		mA	1.2 kBaud, input at sensitivity limit, system clock running at 203 kHz.
		18.7		mA	1.2 kBaud, input well above sensitivity limit, system clock running at 26 MHz.
		19.7		mA	38.4 kBaud, input at sensitivity limit, system clock running at 26 MHz.
		17.0		mA	38.4 kBaud, input at sensitivity limit, system clock running at 203 kHz.
		18.7		mA	38.4 kBaud, input well above sensitivity limit, system clock running at 26 MHz.
		20.4		mA	250 kBaud, input at sensitivity limit, system clock running at 26 MHz.
		18.0		mA	250 kBaud, input at sensitivity limit, system clock running at 1.625 MHz.
		19.1		mA	250 kBaud, input well above sensitivity limit, system clock running at 26 MHz.
Active mode with radio in TX, 315 MHz					System clock running at 26 MHz or 24 MHz. Digital regulator on. High speed crystal oscillator and low power RCOSC running. Radio in TX mode
		31.5		mA	10 dBm output power (`PA_TABLE0=0xC2`)
		19		mA	0 dBm output power (`PA_TABLE0=0x51`)
		18		mA	−6 dBm output power (`PA_TABLE0=0x2A`)

Parameter	Min	Typ	Max	Unit	Condition
Active mode with radio in TX, 433 MHz					System clock running at 26 MHz or 24 MHz. Digital regulator on. High speed crystal oscillator and low power RCOSC running. Radio in TX mode
		33.5		mA	10 dBm output power (`PA_TABLE0=0xC0`)
		20		mA	0 dBm output power (`PA_TABLE0=0x60`)
		19		mA	−6 dBm output power (`PA_TABLE0=0x2A`)
Active mode with radio in TX, 868, 915 MHz					System clock running at 26 MHz or 24 MHz. Digital regulator on. High speed crystal oscillator and low power RCOSC running. Radio in TX mode
		36.2		mA	10 dBm output power (`PA_TABLE0=0xC2`). See Table 7 for typical variation over operating conditions
		21		mA	0 dBm output power (`PA_TABLE0=0x50`)
		20		mA	−6 dBm output power (`PA_TABLE0=0x2B`)
Power mode 0		4.3		mA	Same as active mode, but the CPU is not running (see 12.1.2.2 for details). System clock at 26 MHz or 24 MHz
Power mode 1		220		µA	Digital regulator on. HS RCOSC and high speed crystal oscillator off. 32.768 kHz XOSC or low power RCOSC running (see 12.1.2.3 for details)
Power mode 2		0.5		µA	Digital regulator off. HS RCOSC and high speed crystal oscillator off. Low power RCOSC running (see 12.1.2.4 for details)
Power mode 3		0.3	1.0	µA	Digital regulator off. No crystal oscillators or RC oscillators are running (see 12.1.2.5 for details)
Peripheral Current Consumption					Add to the figures above if the peripheral unit is activated
Timer 1		2.7		µA/MHz	When running
Timer 2		1.3		µA/MHz	When running
Timer 3		1.6		µA/MHz	When running
Timer 4		2		µA/MHz	When running
ADC		1.2		mA	During conversion

Table 6: Current Consumption

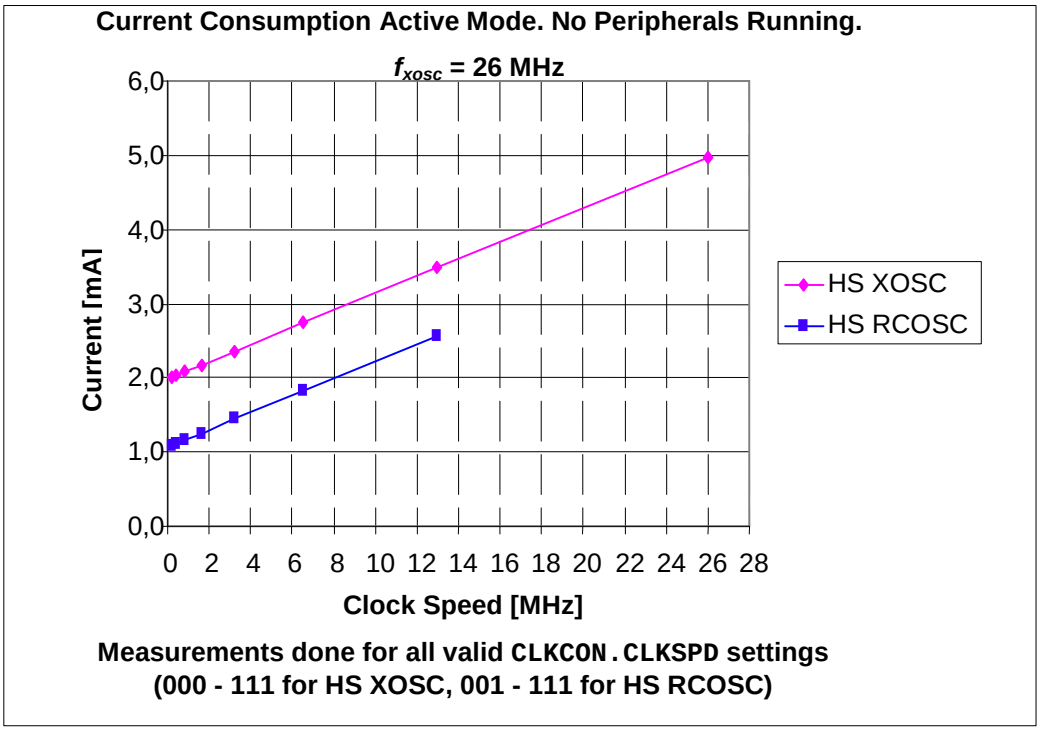

Figure 1: Current Consumption (Active Mode) vs. Clock Speed

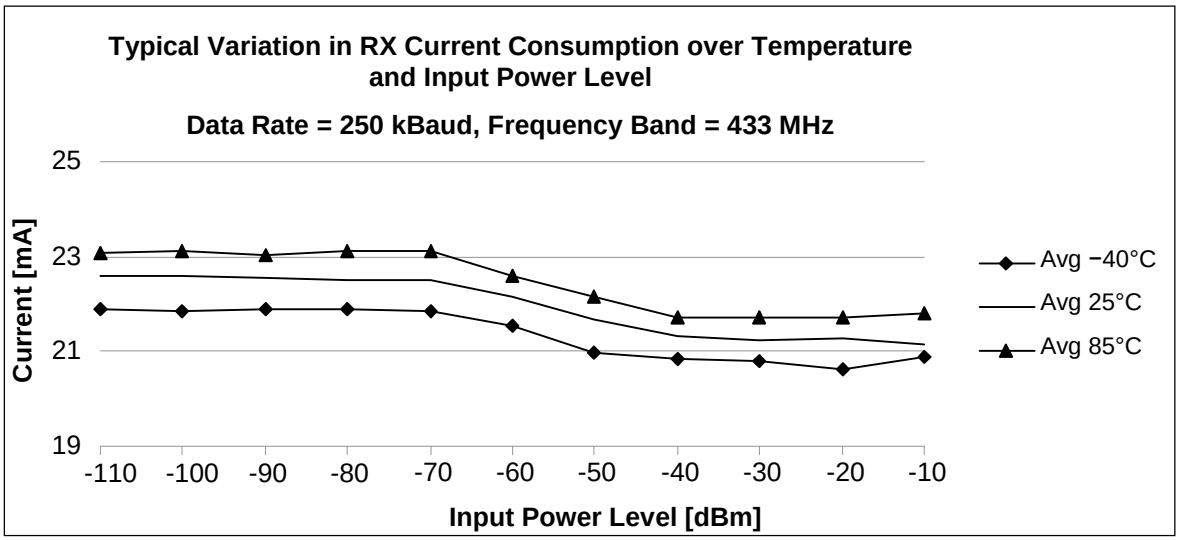

Figure 2: Typical Variation in RX Current Consumption over Temperature and Input Power Level. Data Rate = 250 kBaud, Frequency Band = 433 MHz

	Supply Voltage, VDD = 2 V			Supply Voltage, VDD = 3 V			Supply Voltage, VDD = 3.6 V		
Temperature [°C]	−40	25	85	−40	25	85	−40	25	85
Current [mA]	37	36	35.4	37.2	36.2	35.6	37.5	36.4	35.8

Table 7: Typical Variation in TX Current Consumption over Temperature and Supply Voltage, @ 868 MHz and 10 dBm Output Power.

6.2 RF Receive Section

T_A = 25°C, VDD = 3.0 V if nothing else stated. All measurement results are obtained using the CC1110EM reference design ([1]) if nothing else is stated.

Parameter	Min	Typ	Max	Unit	Condition/Note
Digital channel filter bandwidth	58		812	kHz	User programmable (see Section 13.6). The bandwidth limits are proportional to crystal frequency (given values assume a 26 MHz system clock).
315 MHz, 1.2 kBaud data rate, sensitivity optimized, `MDMCFG2.DEM_DCFILT_OFF=0` (GSK, 1% packet error rate, 20 bytes packet length, 5.2 kHz deviation, 58 kHz digital channel filter bandwidth)					
Receiver sensitivity		−110 −112		dBm dBm	System clock running at 26 MHz System clock running at 24 MHz The RX current consumption can be reduced by approximately 2.0 mA by setting `MDMCFG2.DEM_DCFILT_OFF=1`. The typical sensitivity is then −107 dBm.
315 MHz, 38.4 kBaud data rate, sensitivity optimized, `MDMCFG2.DEM_DCFILT_OFF=0` (GSK, 1% packet error rate, 20 bytes packet length, 20 kHz deviation, 100 kHz digital channel filter bandwidth)					
Receiver sensitivity		−102 −103		dBm dBm	System clock running at 26 MHz System clock running at 24 MHz The RX current consumption can be reduced by approximately 2.1 mA by setting `MDMCFG2.DEM_DCFILT_OFF=1`. The typical sensitivity is then −99 dBm.
315 MHz, 250 kBaud data rate, sensitivity optimized, `MDMCFG2.DEM_DCFILT_OFF=0` (`MDMCFG2.DEM_DCFILT_OFF=1` cannot be used for data rates > 100 kBaud) (GSK, 1% packet error rate, 20 bytes packet length, 127 kHz deviation, 540 kHz digital channel filter bandwidth)					
Receiver sensitivity		−94 −94		dBm dBm	System clock running at 26 MHz System clock running at 24 MHz
433 MHz, 1.2 kBaud data rate, sensitivity optimized, `MDMCFG2.DEM_DCFILT_OFF=0` (GSK, 1% packet error rate, 20 bytes packet length, 5.2 kHz deviation, 58 kHz digital channel filter bandwidth)					
Receiver sensitivity		−110 −110		dBm dBm	System clock running at 26 MHz System clock running at 24 MHz The RX current consumption can be reduced by approximately 2.6 mA by setting `MDMCFG2.DEM_DCFILT_OFF=1`. The typical sensitivity is then −107 dBm.
433 MHz, 38.4 kBaud data rate, sensitivity optimized, `MDMCFG2.DEM_DCFILT_OFF=0` (GSK, 1% packet error rate, 20 bytes packet length, 20 kHz deviation, 100 kHz digital channel filter bandwidth)					
Receiver sensitivity		−102 −101		dBm dBm	System clock running at 26 MHz System clock running at 24 MHz The RX current consumption can be reduced by approximately 2.7 mA by setting `MDMCFG2.DEM_DCFILT_OFF=1`. The typical sensitivity is then −99 dBm.
Parameter	**Min**	**Typ**	**Max**	**Unit**	**Condition/Note**
433 MHz, 250 kBaud data rate, sensitivity optimized, `MDMCFG2.DEM_DCFILT_OFF=0` (`MDMCFG2.DEM_DCFILT_OFF=1` cannot be used for data rates > 100 kBaud) (GSK, 1% packet error rate, 20 bytes packet length, 127 kHz deviation, 540 kHz digital channel filter bandwidth)					
Receiver sensitivity		−95 −93		dBm dBm	System clock running at 26 MHz System clock running at 24 MHz See Table 9 for typical variation over operating conditions

Parameter	Min	Typ	Max	Unit	Condition/Note
868 MHz, 1.2 kBaud data rate, sensitivity optimized, `MDMCFG2.DEM_DCFILT_OFF=0` (GSK, 1% packet error rate, 20 bytes packet length, 5.2 kHz deviation, 58 kHz digital channel filter bandwidth)					
Receiver sensitivity		−110 −110		dBm dBm	System clock running at 26 MHz Tested conducted on [4] CC1111 USB-Dongle Reference Design, 24 MHz clock The RX current consumption can be reduced by approximately 2.0 mA by setting `MDMCFG2.DEM_DCFILT_OFF=1`. The typical sensitivity is then −107 dBm.
Saturation		−14		dBm	`MCSM0.CLOSE_IN_RX=00`
Adjacent channel rejection		38		dB	Desired channel 3 dB above the sensitivity limit. 100 kHz channel spacing
Alternate channel rejection		35		dB	Desired channel 3 dB above the sensitivity limit. 100 kHz channel spacing
					See Figure 58 for plot of selectivity versus frequency offset
Image channel rejection, 868 MHz		33		dB	IF frequency 152 kHz Desired channel 3 dB above the sensitivity limit.
868 MHz, 38.4 kBaud data rate, sensitivity optimized, `MDMCFG2.DEM_DCFILT_OFF=0` (GSK, 1% packet error rate, 20 bytes packet length, 20 kHz deviation, 100 kHz digital channel filter bandwidth)					
Receiver sensitivity		−102 −101		dBm dBm	System clock running at 26 MHz Tested conducted on [4] CC1111 USB-Dongle Reference Design, 24 MHz clock The RX current consumption can be reduced by approximately 2.2 mA by setting `MDMCFG2.DEM_DCFILT_OFF=1`. The typical sensitivity is then −100 dBm.
Saturation		−14		dBm	`MCSM0.CLOSE_IN_RX=00`
Adjacent channel rejection		19		dB	Desired channel 3 dB above the sensitivity limit. 200 kHz channel spacing
Alternate channel rejection		32		dB	Desired channel 3 dB above the sensitivity limit. 200 kHz channel spacing
					See Figure 59 for plot of selectivity versus frequency offset
Image channel rejection, 868 MHz		28		dB	IF frequency 152 kHz Desired channel 3 dB above the sensitivity limit.

Parameter	Min	Typ	Max	Unit	Condition/Note
868 MHz, 250 kBaud data rate, sensitivity optimized, `MDMCFG2.DEM_DCFILT_OFF=0` (`MDMCFG2.DEM_DCFILT_OFF=1` cannot be used for data rates > 100 kBaud) (GSK, 1% packet error rate, 20 bytes packet length, 127 kHz deviation, 540 kHz digital channel filter bandwidth)					
Receiver sensitivity		−94 −91		dBm dBm	System clock running at 26 MHz Tested conducted on [4] CC1111 USB-Dongle Reference Design, 24 MHz clock
Saturation		−16		dBm	`MCSM0.CLOSE_IN_RX=00`
Adjacent channel rejection		27		dB	Desired channel 3 dB above the sensitivity limit. 750 kHz channel spacing
Alternate channel rejection		36		dB	Desired channel 3 dB above the sensitivity limit. 750 kHz channel spacing
					See Figure 60 for plot of selectivity versus frequency offset
Image channel rejection, 868 MHz		17		dB	IF frequency 304 kHz Desired channel 3 dB above the sensitivity limit.
915 MHz, 1.2 kBaud data rate, sensitivity optimized, `MDMCFG2.DEM_DCFILT_OFF=0` (2-FSK, 5.2 kHz deviation, 1% packet error rate, 20 bytes packet length, 58 kHz digital channel filter bandwidth)					
Receiver sensitivity		−108 −110		dBm dBm	System clock running at 26 MHz Tested conducted on [4] CC1111 USB-Dongle Reference Design, 24 MHz clock The RX current consumption can be reduced by approximately 2.0 mA by setting `MDMCFG2.DEM_DCFILT_OFF=1`. The typical sensitivity is then −107 dBm.
915 MHz, 38.4 kBaud data rate, sensitivity optimized, `MDMCFG2.DEM_DCFILT_OFF=0` (2-FSK, 1% packet error rate, 20 bytes packet length, 100 kHz digital channel filter bandwidth)					
Receiver sensitivity		−100 −100		dBm dBm	System clock running at 26 MHz Tested conducted on [4] CC1111 USB-Dongle Reference Design, 24 MHz clock The RX current consumption can be reduced by approximately 2.1 mA by setting `MDMCFG2.DEM_DCFILT_OFF=1`. The typical sensitivity is then −99 dBm.
915 MHz, 250 kBaud data rate, sensitivity optimized, `MDMCFG2.DEM_DCFILT_OFF=0` (`MDMCFG2.DEM_DCFILT_OFF=1` cannot be used for data rates > 100 kBaud) (MSK, 1% packet error rate, 20 bytes packet length, 540 kHz digital channel filter bandwidth)					
Receiver sensitivity		–93 –91		dBm dBm	System clock running at 26 MHz Tested conducted on [4] CC1111 USB-Dongle Reference Design, 24 MHz clock
915 MHz, 500 kBaud data rate, sensitivity optimized, `MDMCFG2.DEM_DCFILT_OFF=0` (`MDMCFG2.DEM_DCFILT_OFF=1` cannot be used for data rates > 100 kBaud) (MSK, 1% packet error rate, 20 bytes packet length, 812 kHz digital channel filter bandwidth)					
Receiver sensitivity		–86		dBm	System clock running at 26 MHz. Not tested on [4] CC1111 USB-Dongle Reference Design, 24 MHz clock

Parameter	Min	Typ	Max	Unit	Condition/Note
Blocking					
Blocking at ±2 MHz offset, 1.2 kBaud, 868 MHz		−45		dBm	Desired channel 3 dB above the sensitivity limit.
Blocking at ±2 MHz offset, 250 kBaud, 868 MHz		−50		dBm	Desired channel 3 dB above the sensitivity limit
Blocking at ±10 MHz offset, 1.2 kBaud, 868 MHz		−33		dBm	Desired channel 3 dB above the sensitivity limit.
Blocking at ±10 MHz offset, 250 kBaud, 868 MHz		−40		dBm	Desired channel 3 dB above the sensitivity limit.
General					
Spurious emissions					Conducted measurement in a 50 Ω single ended load. Complies with EN 300 328, EN 300 440 class 2, FCC CFR47, Part 15 and ARIB STD-T-66. Numbers are from CC1101 (same radio on CC1110 and CC1111) Typical radiated spurious emission is −49 dB measured at the VCO frequency.
25 MHz - 1 GHz		−68	−57	dBm	Maximum figure is the ETSI EN 300 220 limit
Above 1 GHz		−66	−47	dBm	Maximum figure is the ETSI EN 300 220 limit

Table 8: RF Receive Section

	Supply Voltage, VDD = 2 V			Supply Voltage, VDD = 3 V			Supply Voltage, VDD = 3.6 V		
Temperature [°C]	−40	25	85	−40	25	85	−40	25	85
Sensitivity [dBm]	−96.4	−94.9	−92.6	−96.1	−95.0	−92.2	−96.1	−94.5	−92.2

Table 9: Typical Variation in Sensitivity over Temperature and Supply Voltage @ 433 MHz and 250 kBaud Data Rate

6.3 RF Transmit Section

T_A = 25°C, VDD = 3.0 V if nothing else stated. All measurement results are obtained using the CC1110EM reference designs ([1]) if nothing else is stated.

Parameter	Min	Typ	Max	Unit	Condition/Note
Differential load impedance 315 MHz 433 MHz 868/915 MHz		 122 + j31 116 + j41 86.5 + j43		 Ω	Differential impedance as seen from the RF-port (RF_P and RF_N) towards the antenna. Follow the CC1110EM reference designs ([1], [2] and [3]) available from the TI website.
Output power, highest setting		10		dBm	Output power is programmable, and full range is available in all frequency bands Output power may be restricted by regulatory limits. See AN050 [13]. Note that this application note is for CC1101 but the same limitations apply to CC1110Fx and CC1111Fx as well. For CC1111Fx see in addition DN016 [14] for information on antenna solution and additional regulatory restrictions See Figure 3 for typical variation over operating conditions Delivered to 50 Ω single-ended load via CC1110EM reference design [3] RF matching network.
Output power, lowest setting		−30		dBm	Output power is programmable and is available across the entire frequency band Delivered to 50 Ω single-ended load via CC1110EM reference design [3] RF matching network.
Harmonics, radiated 2nd Harm, 433 MHz 3rd Harm, 433 MHz 2nd Harm, 868 MHz 3rd Harm, 868 MHz		 −51 −42 −37 −43		 dBm dBm dBm dBm	Measured on CC1110EM reference designs ([2] and [3]) with CW, 10 dBm output power The antennas used during the radiated measurements (SMAFF-433 from R.W. Badland and Nearson S331 868/915) play a part in attenuating the harmonics
Harmonics, radiated 2nd Harm, 868 MHz 3rd Harm, 868 MHz		 −55 −55		 dBm dBm	Measured on [4] CC1111 USB-Dongle Reference Design, with CW, 10 dBm output power. The chip antenna used during the radiated measurements play a part in attenuating the harmonics
Harmonics, conducted 315 MHz 433 MHz 868 MHz 915 MHz		 < −35 < −52 < −44 < −35 < −35 < −34		 dBm dBm dBm dBm	Measured on CC1110EM reference designs ([1], [2] and [3]) with CW, 10 dBm output power, TX frequency at 315.00 MHz, 433.00 MHz, 868.00 MHz, or 915.00 MHz Frequencies below 960 MHz Frequencies above 960 MHz Frequencies below 1 GHz Frequencies above 1 GHz Frequencies above 1 GHz Frequencies above 1 GHz

Parameter	Min	Typ	Max	Unit	Condition/Note
Spurious emissions radiated, Harmonics not included					Measured on CC1110EM reference designs ([1], [2] and [3]) with 10 dBm CW, TX frequency at 315.00 MHz, 433.00 MHz, 868.00 or 915.00 MH. For CC1111Fx see DN016 [14] Please refer to register TEST1 on Page 225 for required settings in RX and TX
315 MHz		< −58 < −53		dBm	Frequencies below 960 MHz Frequencies above 960 MHz
433 MHz		< −50 < −54 < −56		dBm	Frequencies below 1 GHz Frequencies above 1 GHz Frequencies within 47 - 74, 87.5 - 118, 174 - 230, 470 - 862 MHz
868 MHz		< −56 < −54 < −56		dBm	Frequencies below 1 GHz Frequencies above 1 GHz Frequencies within 47 - 74, 87.5 - 118, 174 - 230, 470 - 862 MHz.
915 MHz		< −51 < −60		dBm	Frequencies below 960 MHz Frequencies above 960 MHz

Table 10: RF Transmit Section

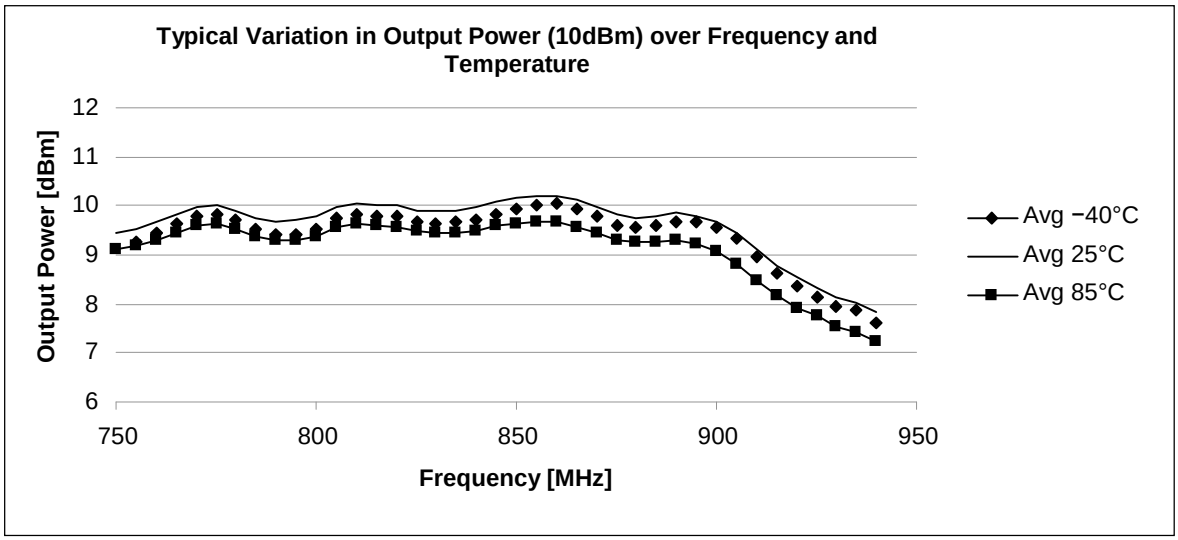

Figure 3: Typical Variation in Output Power over Frequency and Temperature (10 dBm output power)

6.4 Crystal Oscillators

6.4.1 CC1110Fx Crystal Oscillator

T_A = 25°C, VDD = 3.0 V if nothing else is stated.

Parameter	Min	Typ	Max	Unit	Condition/Note
Crystal frequency	26	26	27	MHz	Referred to as f_{XOSC}.
Crystal frequency accuracy requirement		±40		ppm	This is the total tolerance including a) initial tolerance, b) crystal loading, c) aging, and d) temperature dependence. The acceptable crystal tolerance depends on RF frequency and channel spacing / bandwidth.
C_0	1	5	7	pF	Simulated over operating conditions
Load capacitance	10	13	20	pF	Simulated over operating conditions
ESR			100	Ω	Simulated over operating conditions
Start-up time		250		µs	f_{XOSC} = 26 MHz *Note: A Ripple counter of 12 bit is included to ensure duty-cycle requirements. Start-up time includes ripple counter delay until SLEEP.XOSC_STB is asserted*
Power Down Guard Time	3			ms	The crystal oscillator must be in power down for a guard time before it is used again. This requirement is valid for all modes of operation. The need for power down guard time can vary with crystal type and load. Minimum figure is valid for reference crystal NDK, AT-41CD2 and load capacitance according to Table 29. If power down guard time is violated, one of the consequences can be increased PER when using the radio immediately after the crystal oscillator has been reported stable.

Table 11: CC1110Fx Crystal Oscillator Parameters

6.4.2 CC1111Fx Crystal Oscillator

T_A = 25°C, VDD = 3.0 V if nothing else is stated.

Parameter	Min	Typ	Max	Unit	Condition/Note
Crystal frequency		48		MHz	Referred to as f_{XOSC}. 48 MHz crystal gives a system clock of 24 MHz. Please note that there is restricted usage in the frequency bands 863 - 870 MHz (due to spurious emission). See DN016 Compact Antenna Solutions for 868/915 MHz [14]
Crystal frequency accuracy requirement		±40		ppm	This is the total tolerance including a) initial tolerance, b) crystal loading, c) aging, and d) temperature dependence. The acceptable crystal tolerance depends on RF frequency and channel spacing / bandwidth.
C_0					
Fundamental	0.85	1	1.15	pF	Simulated over operating conditions. Variation given by reference crystal NX2520SA from NDK (fundamental).
Load capacitance	15	16	17	pF	Simulated over operating conditions
ESR			60	Ω	Simulated over operating conditions
Start-up time					*Note: A Ripple counter of 14 bit is included to ensure duty-cycle requirements. Start-up time includes ripple counter delay until SLEEP.XOSC_STB is asserted*
Fundamental		650		µs	

Table 12: CC1111Fx Crystal Oscillator Parameters

6.5 32.768 kHz Crystal Oscillator

T_A = 25°C, VDD = 3.0V if nothing else is stated.

Parameter	Min	Typ	Max	Unit	Condition/Note
Crystal frequency		32.768		kHz	
C_0		0.9	2.0	pF	Simulated over operating conditions
Load capacitance		12	16	pF	Simulated over operating conditions
ESR		40	130	kΩ	Simulated over operating conditions
Start-up time		400		ms	Value is simulated

Table 13: 32.768 kHz Crystal Oscillator Parameters

6.6 Low Power RC Oscillator

T_A = 25°C, VDD = 3.0 V if nothing else is stated.

Parameter	Min	Typ	Max	Unit	Condition/Note
Calibrated frequency[2]	34.7 32.0	34.7 32.0	36.0 32.0	kHz	CC1110Fx CC1111Fx Calibrated low power RC oscillator frequency is f_{Ref} / 750
Frequency accuracy after calibration			±1	%	
Temperature coefficient		+0.5		%/°C	Frequency drift when temperature changes after calibration
Supply voltage coefficient		+3		%/V	Frequency drift when supply voltage changes after calibration
Initial calibration time		2		ms	When the low power RC oscillator is enabled, calibration is continuously done in the background as long as the high speed crystal oscillator is running.

Table 14: Low Power RC Oscillator Parameters

[2] $f_{Ref} = f_{XOSC}$ for CC1110Fx and $f_{Ref} = f_{XOSC}$ /2 for CC1111Fx
For CC1110Fx Min figures are given using f_{XOSC} = 26 MHz. Typ figures are given using f_{XOSC} = 26 MHz, and Max figures are given using f_{XOSC} = 27 MHz. For CC1111Fx, f_{XOSC} = 48 MHz

6.7 High Speed RC Oscillator

T_A = 25°C, VDD = 3.0 V if nothing else is stated.

Parameter	Min	Typ	Max	Unit	Condition/Note
Calibrated frequency[2]	12	13	13.5	MHz	Calibrated HS RCOSC frequency is f_{XOSC} / 2
Uncalibrated frequency accuracy		±15		%	
Calibrated frequency accuracy			±1	%	
Start-up time			10	µs	
Temperature coefficient			−325	ppm/°C	Frequency drift when temperature changes after calibration
Supply voltage coefficient			28	ppm/V	Frequency drift when supply voltage changes after calibration
Calibration time		65		µs	The HS RCOSC will be calibrated once when the high speed crystal oscillator is selected as system clock source (`CLKCON.OSC` is set to 0), and also when the system wakes up from PM{1 - 3} if `CLKCON.OSC` was set to 0 when entering PM{1 - 3}. See 12.1.5.1 for details).

Table 15: High Speed RC Oscillator Parameters

6.8 Frequency Synthesizer Characteristics

T_A = 25°C, VDD = 3.0 V if nothing else stated. All measurement results are obtained using the CC1110EM reference designs ([1]).

Parameter	Min	Typ	Max	Unit	Condition/Note
Programmed frequency resolution[3]	397 366	397 366	412 366	Hz	**CC1110Fx** **CC1111Fx** Frequency resolution = f_{Ref}/ 2^{16}
Synthesizer frequency tolerance		±40		ppm	Given by crystal used. Required accuracy (including temperature and aging) depends on frequency band and channel bandwidth / spacing.
RF carrier phase noise		−92		dBc/Hz	@ 50 kHz offset from carrier
RF carrier phase noise		−93		dBc/Hz	@ 100 kHz offset from carrier
RF carrier phase noise		−93		dBc/Hz	@ 200 kHz offset from carrier
RF carrier phase noise		−98		dBc/Hz	@ 500 kHz offset from carrier
RF carrier phase noise		−107		dBc/Hz	@ 1 MHz offset from carrier
RF carrier phase noise		−113		dBc/Hz	@ 2 MHz offset from carrier
RF carrier phase noise		−119		dBc/Hz	@ 5 MHz offset from carrier
RF carrier phase noise		−129		dBc/Hz	@ 10 MHz offset from carrier

[3] f_{Ref} = f_{XOSC} for **CC1110Fx** and f_{Ref} = f_{XOSC} /2 for **CC1111Fx**
For **CC1110Fx** Min figures are given using f_{XOSC} = 26 MHz. Typ figures are given using f_{XOSC} = 26 MHz, and Max figures are given using f_{XOSC} = 27 MHz. For **CC1111Fx**, f_{XOSC} = 48 MHz

Parameter	Min	Typ	Max	Unit	Condition/Note
PLL turn-on / hop time[4]	72.4 81.4	75.2 81.4	75.2 81.4	µs	**CC1110Fx** **CC1111Fx** Time from leaving the IDLE state until arriving in the RX, FSTXON, or TX state, when not performing calibration. Crystal oscillator running.
RX to TX switch [4]	29.0 32.6	30.1 32.6	30.1 32.6	µs	**CC1110Fx** **CC1111Fx** Settling time for the 1·IF frequency step from RX to TX
TX to RX switch [4]	30.0 33.6	31.1 33.6	31.1 33.6	µs	**CC1110Fx** **CC1111Fx** Settling time for the 1·IF frequency step from TX to RX
PLL calibration time[4]	707 796	735 796	735 796	µs	**CC1110Fx** **CC1111Fx** Calibration can be initiated manually or automatically before entering or after leaving RX/TX. *Note: This is the PLL calibration time given that `TEST0=0x0B` and `FSCAL3.CHP_CURR_CAL_EN=10` (max calibration time). Please see DN110 [15] for more details*

Table 16: Frequency Synthesizer Parameters

6.9 Analog Temperature Sensor

T_A= 25°C, VDD = 3.0V if nothing else stated. All measurement results are obtained using the CC1110EM reference designs ([1]).

Parameter	Min	Typ	Max	Unit	Condition/Note
Output voltage at −0°C		0.660		V	
Output voltage at 0°C		0.755		V	
Output voltage at 40°C		0.859		V	
Output voltage at 80°C		0.958		V	
Temperature coefficient		2.47		mV/°C	Fitted from −20°C to 80°C
Error in calculated temperature, calibrated	−2 *	0	2 *	°C	From –20°C to 80°C when using 2.47 mV/°C, after 1-point calibration at room temperature * The indicated minimum and maximum error with 1-point calibration is based on measured values for typical process parameters
Current consumption increase when enabled		0.3		mA	

Table 17: Analog Temperature Sensor Parameters

[4] $f_{Ref} = f_{XOSC}$ for **CC1110Fx** and $f_{Ref} = f_{XOSC}$ /2 for **CC1111Fx**
For **CC1110Fx** Min figures are given using f_{XOSC} = 27 MHz. Typ figures are given using f_{XOSC} = 26 MHz, and Max figures are given using f_{XOSC} = 26 MHz. For **CC1111Fx**, f_{XOSC} = 48 MHz The system clock frequency is equal to f_{Ref} and the data rate is 250 kBaud. No PA ramping is used. See DN110 [15] for more details.

6.10 7 - 12 bit ADC

T_A = 25°C, VDD = 3.0 V if nothing else stated. The numbers given here are based on tests performed in accordance with IEEE Std 1241-2000 [8]. The ADC data are from CC2430 characterization. As the CC1110Fx/C1111Fx uses the same ADC, the numbers listed in Table 18 should be good indicators of the performance to be expected from CC1110Fx and CC1111Fx. Note that these numbers will apply for 24 MHz operated systems (CC1111Fx using a 48 MHz crystal). Performance will be slightly different for other crystal frequencies (e.g. 26 MHz and 27 MHz).

Parameter	Min	Typ	Max	Unit	Condition/Note
Input voltage	0		VDD	V	VDD is the voltage on the AVDD pin (2.0 - 3.6 V)
External reference voltage	0		VDD	V	VDD is the voltage on the AVDD pin (2.0 - 3.6 V)
External reference voltage differential	0		VDD	V	VDD is the voltage on the AVDD pin (2.0 - 3.6 V)
Input resistance, signal		197		kΩ	Simulated using 4 MHz clock speed (see Section 12.10.2.7)
Full-Scale Signal[5]		2.97		V	Peak-to-peak, defines 0 dBFS
ENOB[5] Single ended input		5.7 7.5 9.3 10.8		bits	7-bits setting 9-bits setting 10-bits setting 12-bits setting
ENOB[5] Differential input		6.5 8.3 10.0 11.5		bits	7-bits setting 9-bits setting 10-bits setting 12-bits setting
Useful Power Bandwidth		0 - 20		kHz	7-bits setting, both single and differential
THD[5] -Single ended input -Differential input		 −75.2 −86.6		 dB	 12-bits setting, −6 dBFS 12-bits setting, −6 dBFS
Signal To Non-Harmonic Ratio[5] -Single ended input -Differential input		 70.2 79.3		 dB	 12-bits setting 12-bits setting
Spurious Free Dynamic Range[5] -Single ended input -Differential input		 78.8 88.9		 dB	 12-bits setting, -6 dBFS 12-bits setting, -6 dBFS
CMRR, differential input		<−84		dB	12- bit setting, 1 kHz Sine (0 dBFS), limited by ADC resolution
Crosstalk, single ended input		<−84		dB	12- bit setting, 1 kHz Sine (0 dBFS), limited by ADC resolution
Offset		−3		mV	Mid. Scale
Gain error		0.68		%	
DNL[5]		0.05 0.9		LSB	12-bits setting, mean 12-bits setting, max
INL[5]		4.6 13.3		LSB	12-bits setting, mean 12-bits setting, max

[5] Measured with 300 Hz Sine input and VDD as reference.

Parameter	Min	Typ	Max	Unit	Condition/Note
SINAD[5]		35.4		dB	7-bits setting
Single ended input (−THD+N)		46.8 57.5 66.6		dB	9-bits setting 10-bits setting 12-bits setting
SINAD[5] Differential input (−THD+N)		40.7 51.6 61.8 70.8		dB	7-bits setting 9-bits setting 10-bits setting 12-bits setting
Conversion time		20 36 68 132		µs	7-bits setting 9-bits setting 10-bits setting 12-bits setting
Current consumption		1.2		mA	

Table 18: 7 - 12 bit ADC Characteristics

6.11 Control AC Characteristics

T_A = 25°C, VDD = 3.0 V if nothing else stated. All measurement results are obtained using the CC1110EM reference designs ([1]).

Parameter	Min	Typ	Max	Unit	Condition/Note		
System clock, f_{SYSCLK} t_{SYSCLK}= 1/ f_{SYSCLK}					***CC1110Fx***		
	0.1875	26	27	MHz	High speed crystal oscillator used as source (HS XOSC).		
	0.1875	13	13.5	MHz	Calibrated HS RCOSC used as source.		
						HS XOSC	HS RCOSC
					Min: f_{XOSC} = 24 MHz, `CLKCON.CLKSPD` =	`111`	`111`
					Typ: f_{XOSC} = 26 MHz, `CLKCON.CLKSPD` =	`000`	`001`
					Max: f_{XOSC} = 27 MHz, `CLKCON.CLKSPD` =	`000`	`001`
					CC1111Fx		
	0.1875	24	24	MHz	High speed crystal oscillator used as source		
	0.1875	12	12	MHz	HS RCOSC used as source		
						HS XOSC	HS RCOSC
					Min: f_{XOSC} = 48 MHz, `CLKCON.CLKSPD` =	`111`	`111`
					Typ: f_{XOSC} = 48 MHz, `CLKCON.CLKSPD` =	`000`	`001`
					Max: f_{XOSC} = 48 MHz, `CLKCON.CLKSPD` =	`000`	`001`
RESET_N low width	250			ns	See item 1, Figure 4. This is the shortest pulse that is guaranteed to be recognized as a reset pin request. *Note: Shorter pulses may be recognized but will not lead to complete reset of all modules within the chip.*		
Interrupt pulse width	t_{SYSCLK}				See item 2, Figure 4. This is the shortest pulse that is guaranteed to be recognized as an interrupt request. In PM2/3 the internal synchronizers are bypassed so this requirement does not apply in PM2/3.		

Table 19: Control Inputs AC Characteristics

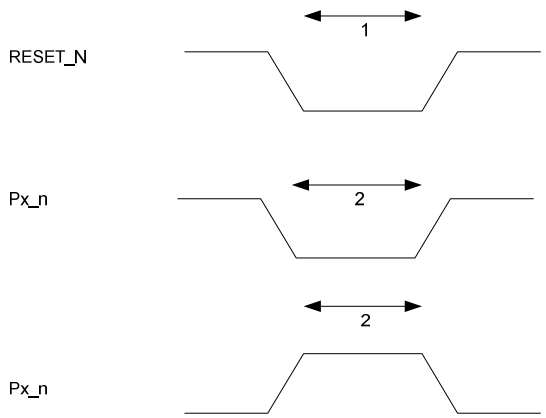

Figure 4: Control Inputs AC Characteristics

6.11.1 Filtering of RESET_N pin

The RESET_N pin is sensitive to noise and can cause unintended reset of the chip. For a long reset line add an external RC filter with values 1 nF and 2.7 kΩ close to the RESET_N pin. When doing this, note that the RESET_N low width (the shortest pulse that is guaranteed to be recognized as a reset pin request) is longer than stated in Table 19.

6.12 SPI AC Characteristics

T_A = 25°C, VDD = 3.0V if nothing else stated. All measurement results are obtained using the CC1110EM reference designs ([1]).

Parameter	Min	Typ	Max	Unit	Condition/Note
SCK period		See Section 12.14.3		ns	Master. See item 1, Figure 5
SCK duty cycle		50		%	Master.
SSN low to SCK	$2 \cdot t_{SYSCLK}$				See item 5, Figure 5
SCK to SSN high	30			ns	See item 6, Figure 5
MISO setup	10			ns	Master. See item 2, Figure 5
MISO hold	10			ns	Master. See item 3, Figure 5
SCK to MOSI			25	ns	Master. See item 4, Figure 5, load = 10 pF
SCK period	100			ns	Slave. See item 1, Figure 5
SCK duty cycle		50		%	Slave.
MOSI setup	10			ns	Slave. See item 2, Figure 5
MOSI hold	10			ns	Slave. See item 3, Figure 5
SCK to MISO			25	ns	Slave. See item 4, Figure 5, load = 10 pF

Table 20: SPI AC Characteristics

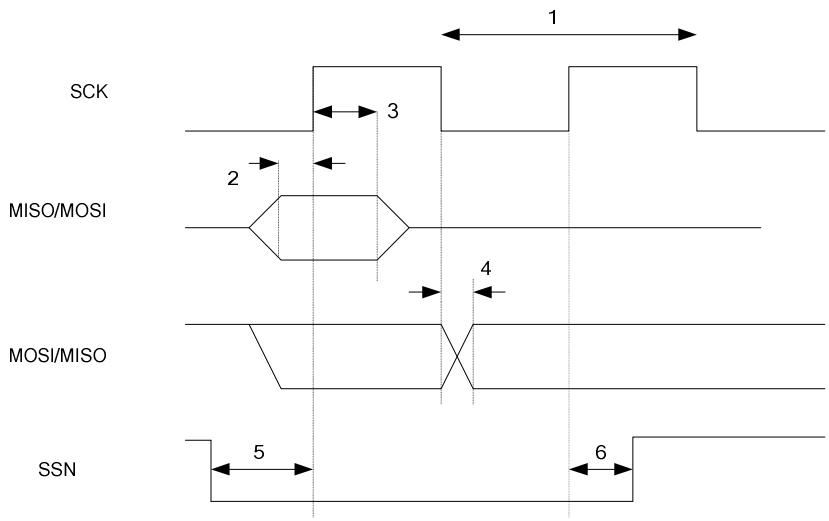

Figure 5: SPI AC Characteristics

6.13 Debug Interface AC Characteristics

T_A = 25°C, VDD = 3.0 V if nothing else stated. All measurement results are obtained using the CC1110EM reference designs ([1]).

Parameter	Min	Typ	Max	Unit	Condition/Note
Debug clock period	125			ns	See item 1, Figure 6 *Note: `CLKCON.CLKSPD` must be 000 or 001 when using the debug interface*
Debug data setup	5			ns	See item 2, Figure 6
Debug data hold	5			ns	See item 3, Figure 6
Clock to data delay			10	ns	See item 4, Figure 6, load = 10 pF
RESET_N inactive after P2_2 rising	10			ns	See item 5, Figure 6

Table 21: Debug Interface AC Characteristics

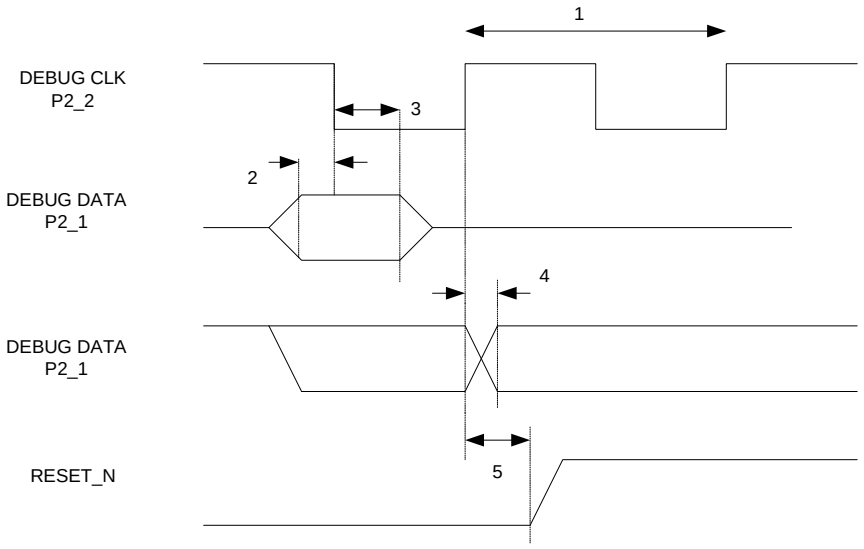

Figure 6: Debug Interface AC Characteristics

6.14 Port Outputs AC Characteristics

T_A = 25°C, VDD = 3.0 V if nothing else stated. All measurement results are obtained using the CC1110EM reference designs ([1]).

Parameter	Min	Typ	Max	Unit	Condition/Note
P0_[0:7], P1_[2:7], P2_[0:4] Port output rise time (`IOCFG1.GDO_DS=0` / `IOCFG1.GDO_DS=1`)		3.15 / 1.34		ns	Load = 10 pF Timing is with respect to 10% VDD and 90% VDD levels. Values are estimated
P0_[0:7], P1_[2:7], P2_[0:4] Port output fall time (`IOCFG1.GDO_DS=0` / `IOCFG1.GDO_DS=1`)		3.2 / 1.44		ns	Load = 10 pF Timing is with respect to 90% VDD and 10% VDD. Values are estimated

Table 22: Port Outputs AC Characteristics

6.15 Timer Inputs AC Characteristics

T_A = 25°C, VDD = 3.0 V if nothing else stated. All measurement results are obtained using the CC1110EM reference designs ([1]).

Parameter	Min	Typ	Max	Unit	Condition/Note
Input capture pulse width	t_{SYSCLK}				Synchronizers determine the shortest input pulse that can be recognized. The synchronizers operate from the current system clock rate (see Table 19)

Table 23: Timer Inputs AC Characteristics

6.16 DC Characteristics

The DC Characteristics of ***CC1110Fx/CC1111Fx*** are listed in Table 24 below.

T_A = 25°C, VDD = 3.0 V if nothing else stated. All measurement results are obtained using the CC1110EM reference designs ([1]).

Digital Inputs/Outputs	Min	Typ	Max	Unit	Condition
Logic "0" input voltage			30	%	Of VDD supply (2.0 - 3.6 V)
Logic "1" input voltage	70			%	Of VDD supply (2.0 - 3.6 V)
Logic "0" input current per pin	N/A		12	nA	Input equals 0 V
Logic "1" input current per pin	N/A		12	nA	Input equals VDD
Total logic “0” input current all pins			70	nA	
Total logic “1” input current all pins			70	nA	
I/O pin pull-up and pull-down resistor		20		kΩ	

Table 24: DC Characteristics

7 Pin and I/O Port Configuration

The **CC1110Fx** pin-out is shown in Figure 7 and Table 25. See Section 12.4 for details on the I/O configuration.

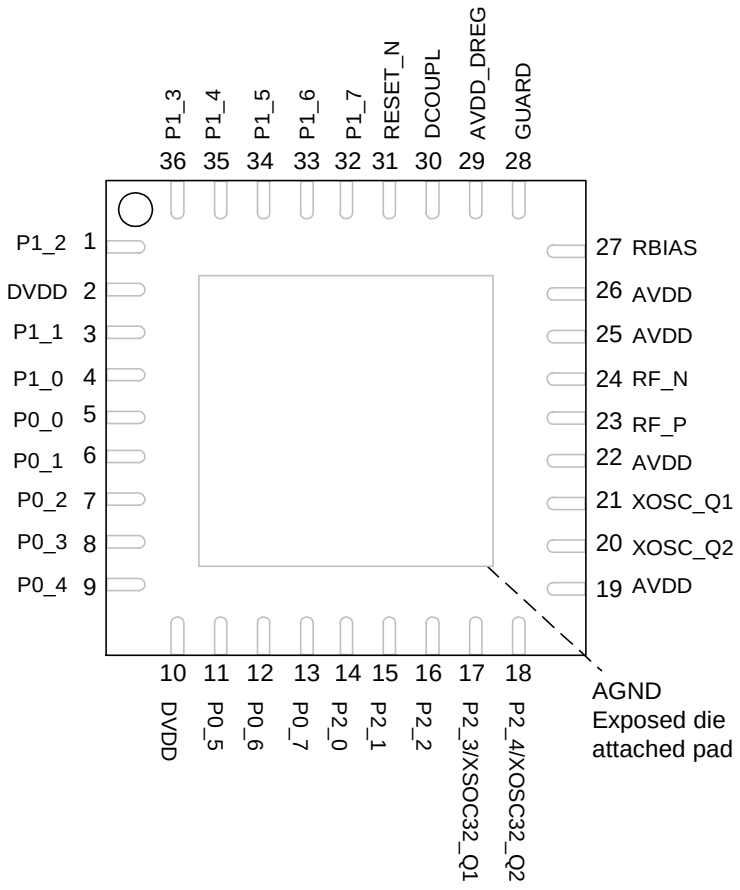

Figure 7: CC1110Fx Pinout Top View

*Note: The exposed die attach pad **must** be connected to a solid ground plane as this is the ground connection for the chip.*

Pin	Pin Name	Pin Type	Description
-	AGND	Ground	The exposed die attach pad must be connected to a solid ground plane
1	P1_2	D I/O	Port 1.2
2	DVDD	Power (Digital)	2.0 V - 3.6 V digital power supply for digital I/O
3	P1_1	D I/O	Port 1.1
4	P1_0	D I/O	Port 1.0
5	P0_0	D I/O	Port 0.0
6	P0_1	D I/O	Port 0.1
7	P0_2	D I/O	Port 0.2
8	P0_3	D I/O	Port 0.3
9	P0_4	D I/O	Port 0.4
10	DVDD	Power (Digital)	2.0 V - 3.6 V digital power supply for digital I/O
11	P0_5	D I/O	Port 0.5
12	P0_6	D I/O	Port 0.6
13	P0_7	D I/O	Port 0.7
14	P2_0	D I/O	Port 2.0
15	P2_1	D I/O	Port 2.1
16	P2_2	D I/O	Port 2.2
17	P2_3/XOSC32_Q1	D I/O	Port 2.3/32.768 kHz crystal oscillator pin 1
18	P2_4/XOSC32_Q2	D I/O	Port 2.4/32.768 kHz crystal oscillator pin 2
19	AVDD	Power (Analog)	2.0 V - 3.6 V analog power supply connection
20	XOSC_Q2	Analog I/O	Crystal oscillator pin 2
21	XOSC_Q1	Analog I/O	Crystal oscillator pin 1, or external clock input
22	AVDD	Power (Analog)	2.0 V - 3.6 V analog power supply connection
23	RF_P	RF I/O	Positive RF input signal to LNA in receive mode Positive RF output signal from PA in transmit mode
24	RF_N	RF I/O	Negative RF input signal to LNA in receive mode Negative RF output signal from PA in transmit mode
25	AVDD	Power (Analog)	2.0 V - 3.6 V analog power supply connection
26	AVDD	Power (Analog)	2.0 V - 3.6 V analog power supply connection
27	RBIAS	Analog I/O	External precision bias resistor for reference current
28	GUARD	Power (Digital)	Power supply connection for digital noise isolation
29	AVDD_DREG	Power (Digital)	2.0 V - 3.6 V digital power supply for digital core voltage regulator
30	DCOUPL	Power decoupling	1.8 V digital power supply decoupling
31	RESET_N	DI	Reset, active low
32	P1_7	D I/O	Port 1.7
33	P1_6	D I/O	Port 1.6
34	P1_5	D I/O	Port 1.5
35	P1_4	D I/O	Port 1.4
36	P1_3	D I/O	Port 1.3

Table 25: CC1110Fx Pin-out Overview

The ***CC1111Fx*** pin-out is shown in Figure 8 and Table 26. See Section 12.4 for details on the I/O configuration.

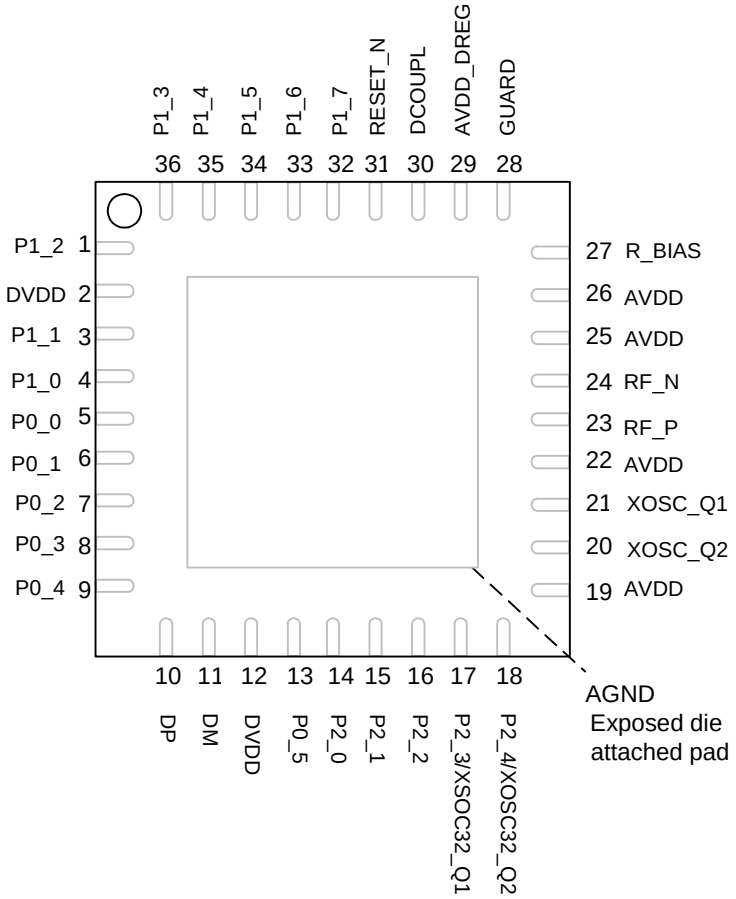

Figure 8: *CC1111Fx* Pin-out Top View

*Note: The exposed die attach pad **must** be connected to a solid ground plane as this is the ground connection for the chip.*

Pin	Pin Name	Pin Type	Description
-	AGND	Ground	The exposed die attach pad must be connected to a solid ground plane
1	P1_2	D I/O	Port 1.2
2	DVDD	Power (Digital)	2.0 V - 3.6 V digital power supply for digital I/O
3	P1_1	D I/O	Port 1.1
4	P1_0	D I/O	Port 1.0
5	P0_0	D I/O	Port 0.0
6	P0_1	D I/O	Port 0.1
7	P0_2	D I/O	Port 0.2
8	P0_3	D I/O	Port 0.3
9	P0_4	D I/O	Port 0.4
10	DP	USB I/O	USB Differential Data Bus Plus
11	DM	USB I/O	USB Differential Data Bus Minus
12	DVDD	Power (Digital)	2.0 V - 3.6 V digital power supply for digital I/O
13	P0_5	D I/O	Port 0.5
14	P2_0	D I/O	Port 2.0
15	P2_1	D I/O	Port 2.1
16	P2_2	D I/O	Port 2.2
17	P2_3/XOSC32_Q1	D I/O	Port 2.3/32.768 kHz crystal oscillator pin 1
18	P2_4/XOSC32_Q2	D I/O	Port 2.4/32.768 kHz crystal oscillator pin 2
19	AVDD	Power (Analog)	2.0 V - 3.6 V analog power supply connection
20	XOSC_Q2	Analog I/O	Crystal oscillator pin 2
21	XOSC_Q1	Analog I/O	Crystal oscillator pin 1, or external clock input
22	AVDD	Power (Analog)	2.0 V - 3.6 V analog power supply connection
23	RF_P	RF I/O	Positive RF input signal to LNA in receive mode Positive RF output signal from PA in transmit mode
24	RF_N	RF I/O	Negative RF input signal to LNA in receive mode Negative RF output signal from PA in transmit mode
25	AVDD	Power (Analog)	2.0 V - 3.6 V analog power supply connection
26	AVDD	Power (Analog)	2.0 V - 3.6 V analog power supply connection
27	RBIAS	Analog I/O	External precision bias resistor for reference current
28	GUARD	Power (Digital)	Power supply connection for digital noise isolation
29	AVDD_DREG	Power (Digital)	2.0 V - 3.6 V digital power supply for digital core voltage regulator
30	DCOUPL	Power decoupling	1.8 V digital power supply decoupling
31	RESET_N	DI	Reset, active low
32	P1_7	D I/O	Port 1.7
33	P1_6	D I/O	Port 1.6
34	P1_5	D I/O	Port 1.5
35	P1_4	D I/O	Port 1.4
36	P1_3	D I/O	Port 1.3

Table 26: CC1111Fx Pin-out Overview

8 Circuit Description

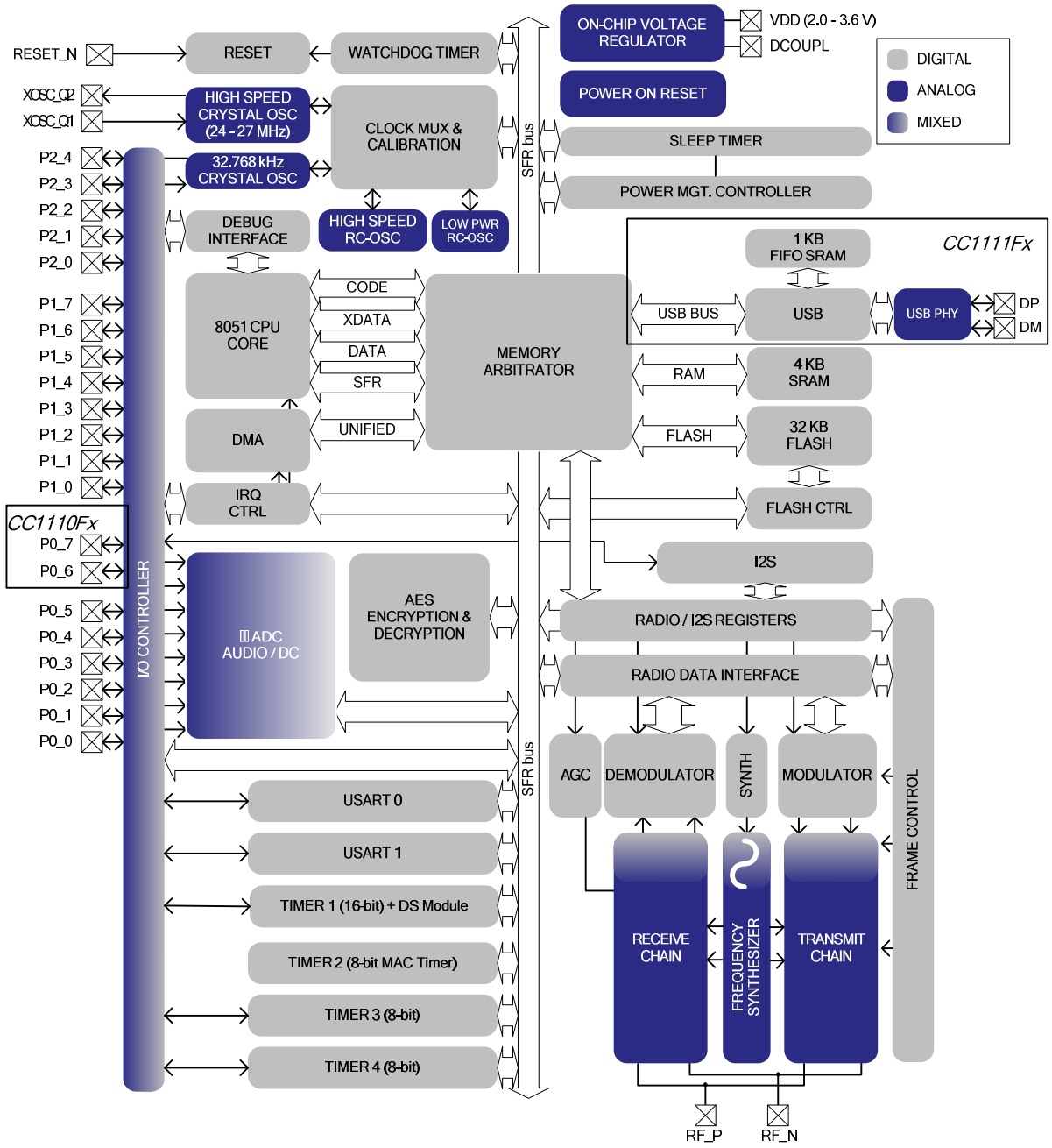

Figure 9: CC1110Fx/CC1111Fx Block Diagram

A block diagram of CC1110Fx/CC1111Fx is shown in Figure 9. The modules can be divided into one out of three categories: CPU-related modules, radio-related modules, and modules related to power, test, and clock distribution. In the following sub-sections, a short description of each module that appears in Figure 9.

8.1 CPU and Peripherals

The **8051 CPU core** is a single-cycle 8051-compatible core. It has three different memory access buses (SFR, DATA and CODE/XDATA), a debug interface, and an extended interrupt unit servicing 18 interrupt sources. See Section 1 for details on the CPU.

The **memory crossbar/arbitrator** is at the heart of the system as it connects the CPU and DMA controller with the physical memories and all peripherals through the SFR bus. The memory arbitrator has four memory access points, access at which can map to one of three physical memories on the CC2510Fx and one of four physical memories on the CC2511Fx: a 1/2/4 KB SRAM, 8/16/32 KB flash memory, RF/I^2S registers, and USB registers (CC2511Fx). The memory arbitrator is responsible for performing arbitration and sequencing between simultaneous memory accesses to the same physical memory.

The **SFR bus** is drawn conceptually in the block diagram as a common bus that connects all hardware peripherals, except USB, to the memory arbitrator. The SFR bus also provides access to the radio registers and I^2S registers in the radio register bank even though these are indeed mapped into XDATA memory space.

The **1/2/4 KB SRAM** maps to the DATA memory space and part of the XDATA and CODE memory spaces. The memory is an ultra-low-power SRAM that retains its contents even when the digital part is powered off (PM2 and PM3).

The **8/16/32 KB flash block** provides in-circuit programmable non-volatile program memory for the device and maps into the CODE and XDATA memory spaces. Table 27 shows the available devices in the CC1110/CC1111 family. The available devices differ only in flash memory size. Writing to the flash block is performed through a **Flash Controller** that allows page-wise (1024 byte) erasure and 2-byte-wise reprogramming. See Section 12.3 for details.

Device	Flash [KB]
CC1110F8	8
CC1111F8	8
CC1110F16	16
CC1111F16	16
CC1110F32	32
CC1111F32	32

Table 27: CC1110Fx/CC1111Fx Flash Memory Options

A versatile five-channel **DMA controller** is available in the system. It accesses memory using a unified memory space and has therefore access to all physical memories. Each channel is configured (trigger event, priority, transfer mode, addressing mode, source and destination pointers, and transfer count) with DMA descriptors anywhere in memory. Many of the hardware peripherals rely on the DMA controller for efficient operation (AES core, Flash Controller, USARTs, Timers, and ADC interface) by performing data transfers between a single SFR address and flash/SRAM. See Section 12.5 for details.

The **interrupt controller** services 18 interrupt sources, divided into six *interrupt groups,* each of which is associated with one out of four interrupt priorities. An interrupt request is serviced even if the device is in PM1, PM2, or PM3 by bringing the CC1110Fx/CC1111Fx back to active mode.

The **debug interface** implements a proprietary two-wire serial interface that is used for in-circuit debugging. Through this debug interface it is possible to perform an erasure of the entire flash memory, control which oscillators are enabled, stop and start execution of the user program, execute supplied instructions on the 8051 core, set code breakpoints, and single step through instructions in the code. Using these techniques it is possible to perform in-circuit debugging and external flash programming. See Section 11 for details.

The **I/O-controller** is responsible for all general-purpose I/O pins. The CPU can configure whether peripheral modules control certain pins or if they are under software control. In the latter case, each pin can be configured as an input or output and it is also possible to configure the input mode to be pull-up, pull-down, or tristate. Each peripheral that connects to the I/O-pins can choose between two different I/O pin locations to ensure flexibility in various applications. See Section 12.4 for details.

The **Sleep Timer** is an ultra low-power timer which uses a 32.768 kHz crystal oscillator or a low power RC oscillator as clock source. The Sleep Timer runs continuously in all operating modes except active mode and PM3 and is typically used to get out of PM0, PM1, or PM2. See Section 12.8 for details.

A built-in **watchdog timer** allows the ***CC1110Fx/CC1111Fx*** to reset itself in case the firmware hangs. When enabled, the watchdog timer must be cleared periodically, otherwise it will reset the device when it times out. See Section 12.13 for details.

Timer 1 is a 16-bit timer which supports typical timer/counter functions such as input capture, output compare, and PWM functions. The timer has a programmable prescaler, a 16-bit period value, and three independent capture/compare channels. Each of the channels can be used as PWM outputs or to capture the timing of edges on input signals. A second order Delta-Sigma noise shaper mode is also supported for audio applications. See Section 12.6 for details.

Timer 2 (MAC timer) is specially designed to support time-slotted protocols in software. The timer has a configurable timer period and a programmable prescaler range. See Section 12.7 for details.

Timers 3 and Timer 4 are two 8-bit timers which supports typical timer/counter functions such as output compare and PWM functions. They have a programmable prescaler, an 8-bit period value, and two compare channels each, which can be used as PWM outputs. See Section 12.9 for details.

USART 0 and USART 1 are each configurable as either an SPI master/slave or a UART. They provide hardware flow-control and double buffering on both RX and TX and are thus well suited for high-throughput, full-duplex applications. Each has its own high-precision baud-rate generator, hence leaving the ordinary timers free for other uses. When configured as an SPI slave they sample the input signal using SCK directly instead of using some over-sampling scheme and are therefore well-suited for high data rates. See Section 12.14 for details.

The **AES encryption/decryption core** allows the user to encrypt and decrypt data using the AES algorithm with 128-bit keys. See Section 12.12 for details.

The **ADC** supports 7 to 12 bits of resolution in a 30 kHz to 4 kHz bandwidth respectively. DC and audio conversions with up to eight input channels (P0) are possible (***CC1111Fx*** is limited to six channels). The inputs can be selected as single ended or differential. The reference voltage can be internal, VDD, or a single ended or differential external signal. The ADC also has a temperature sensor input channel. The ADC can automate the process of periodic sampling or conversion over a sequence of channels. See Section 12.10 for details.

The **USB** allows the ***CC1111Fx*** to implement a Full-Speed USB 2.0 compatible device. The USB has a dedicated 1 KB SRAM that is used for the endpoint FIFOs. 5 endpoints are available in addition to control endpoint 0. Each of these endpoints must be configured as Bulk/Interrupt or Isochronous and can be used as IN, OUT or IN/OUT. Double buffering of packets is also supported for endpoints 1 - 5. The maximum FIFO memory available for each endpoint is as follows: 32 bytes for endpoint 0, 32 bytes for endpoint 1, 64 bytes for endpoint 2, 128 bytes for endpoint 3, 256 bytes for endpoint 4, and 512 bytes for endpoint 5. When an endpoint is used as IN/OUT, the FIFO memory available for the endpoint can be distributed between IN and OUT depending on the demands of the application. *The USB does not exist on the* ***CC1110Fx***. See Section 12.16 for details.

The **I^2S** can be used to send/receive audio samples to/from an external sound processor or DAC and may operate at full or half duplex. Samples of up to 16-bits resolution can be used although the I^2S can be configured to send more low order bits if necessary to be compliant with the resolution of the receiver (up to 32 bit). The maximum bit-rate supported is 3.5 Mbps. The I^2S can be configured as a master or slave device and supports both mono and stereo. Automatic μ-Law expansion and compression can also be configured. See Section 12.4.6.6 for details.

8.2 Radio

CC1110Fx/CC1111Fx features an RF transceiver based on the industry-leading CC1101, requiring very few external components. See Section 9 for details.

9 Application Circuit

Only a few external components are required for using the CC1110Fx/CC1111Fx. The recommended application circuit for CC1110Fx is shown in Figure 10. The recommended application circuits for CC1111Fx are shown in Figure 12. The recommended CC1111Fx circuit uses a fundamental crystal. The external components are described in Table 28, and typical values are given in Table 29.

9.1 Bias Resistor

The bias resistor R271 is used to set an accurate bias current.

9.2 Balun and RF Matching

The balanced RF input and output of CC1110Fx/CC1111Fx share two common pins and are designed for a simple, low-cost matching and balun network on the printed circuit board. The receive- and transmit switching at the CC1110Fx/CC1111Fx front-end are controlled by a dedicated on-chip function, eliminating the need for an external RX/TX-switch.

A few passive external components combined with the internal RX/TX switch/termination circuitry ensure match in both RX and TX mode.

Although CC1110Fx/CC1111Fx has a balanced RF input/output, the chip can be connected to a single-ended antenna with few external low cost capacitors and inductors.

The passive matching/filtering network connected to CC1110Fx/CC1111Fx should have the following differential impedance as seen from the RF-port (RF_P and RF_N) towards the antenna:

$Z_{out\ @\ 315\ MHz} = 122 + j31\ \Omega$

$Z_{out\ @\ 433\ MHz} = 116 + j41\ \Omega$

$Z_{out\ @\ 868\ MHz} = 86.5 + j43\ \Omega$

To ensure optimal matching of the CC1110Fx/CC1111Fx differential output it is highly recommended to follow the CC1110EM reference designs [1] or the CC1111 USB-Dongle Reference Design [4] as closely as possible. Gerber files and schematics for the reference designs are available for download from the TI website.

9.3 Crystal

The crystal oscillator for the CC1110Fx uses an external crystal X1, with two loading capacitors (C201 and C211) while the crystal oscillator for the CC1111Fx uses an external crystal X3, with two loading capacitors (C203 and C214) (see Figure 10, Figure 11, Figure 12, and Table 28).

> *Note: The high speed crystal oscillator must be stable (SLEEP.XOSC_STB=1) before using the radio.*

The recommended application circuits also show the connections for an optional 32.768 kHz crystal oscillator with external crystal X2 and loading capacitors C181 and C171. This crystal can be used by the Sleep Timer if more accurate wake-up intervals are needed than what the internal RC oscillator can provide. When not using X2, P2_3 and P2_4 may be used as general IO pins.

The loading capacitor values depend on the total load capacitance, C_L, specified for the crystal. The total load capacitance seen between the crystal terminals should equal C_L for the crystal to oscillate at the specified frequency. For the CC1110Fx using the crystal X1, the load capacitance C_L is given as:

$$C_L = \frac{1}{\frac{1}{C_{211}} + \frac{1}{C_{201}}} + C_{Parasitic}$$

The parasitic capacitance is constituted by pin input capacitance and PCB stray capacitance.

Total parasitic capacitance is typically 2.5 pF.

The crystal oscillator is amplitude regulated. This means that a high current is used to start up the oscillations. When the amplitude builds up, the current is reduced to what is necessary to maintain approximately 0.4 Vpp signal swing. This ensures a fast start-up, and keeps the drive level to a minimum. The ESR of the crystal should be within the specification in order to ensure a reliable start-up

9.4 Reference Signal

The chip can alternatively be operated with a reference signal from 26 to 27 MHz (CC1110Fx) or 48 MHz (CC1111Fx) instead of a crystal. This input clock can either be a full-swing digital signal (0 V to VDD) or a sine wave of maximum 1 V peak-peak amplitude. The reference signal must be connected to the XOSC_Q1 input. The sine wave must be connected to XOSC_Q1 using a serial capacitor. When using a full-swing digital signal this capacitor can be omitted. The XOSC_Q2 line must be left un-connected. The crystal loading capacitors and crystal inductor (if using X4) can be omitted when using a reference signal

9.5 USB (CC1111Fx)

For the CC1111Fx, the DP and DM pins need series resistors R262 and R263 for impedance matching and the D+ line must have a pull-up resistor, R264. The series resistors should match the 90 Ω ±15% characteristic impedance of the USB bus.

Notice that the pull-up resistor must be tied to a voltage source between 3.0 and 3.6 V (typically 3.3 V). The voltage source must be derived from or controlled by the V_{BUS} power supply provided by the USB cable. In this way, the pull-up resistor does not provide current to the D+ line when V_{BUS} is removed. The pull-up resistor may be connected directly between V_{BUS} and the D+ line. As an alternative, if the CC1111Fx firmware needs the ability to disconnect from the USB bus, an I/O pin on the CC1111Fx can be used to control the pull-up resistor.

9.6 Power Supply Decoupling

The power supply must be properly decoupled close to the supply pins. Note that decoupling capacitors are not shown in the application circuit. The placement and the size of the decoupling capacitors are very important to achieve the optimum performance. TI provides reference designs that should be followed closely ([1], [2], [3] and [4]).

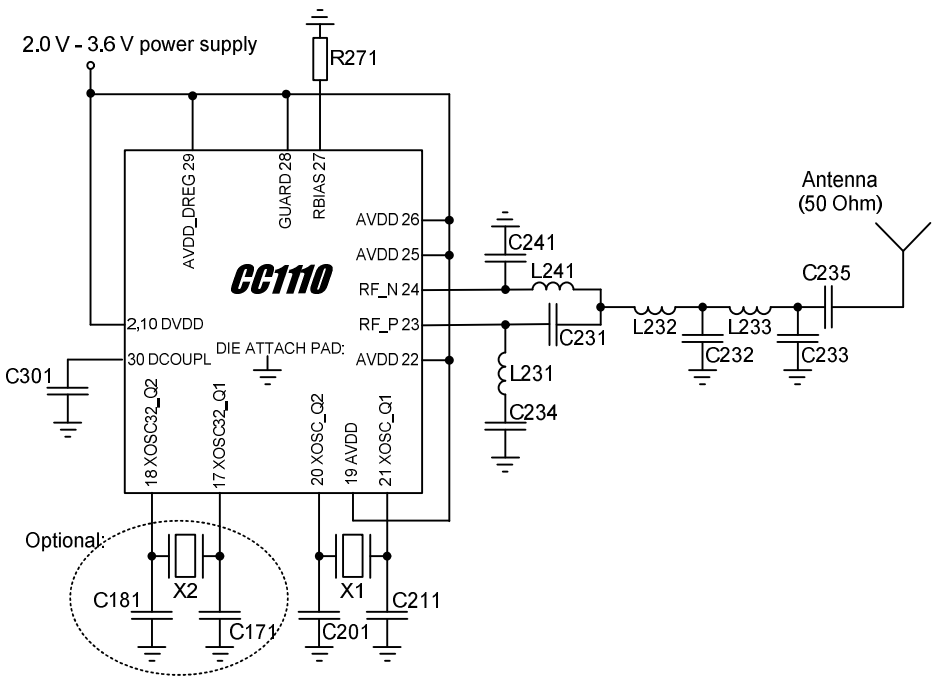

Figure 10: Application Circuit for CC1110Fx 315/433 MHz (excluding supply decoupling capacitors)

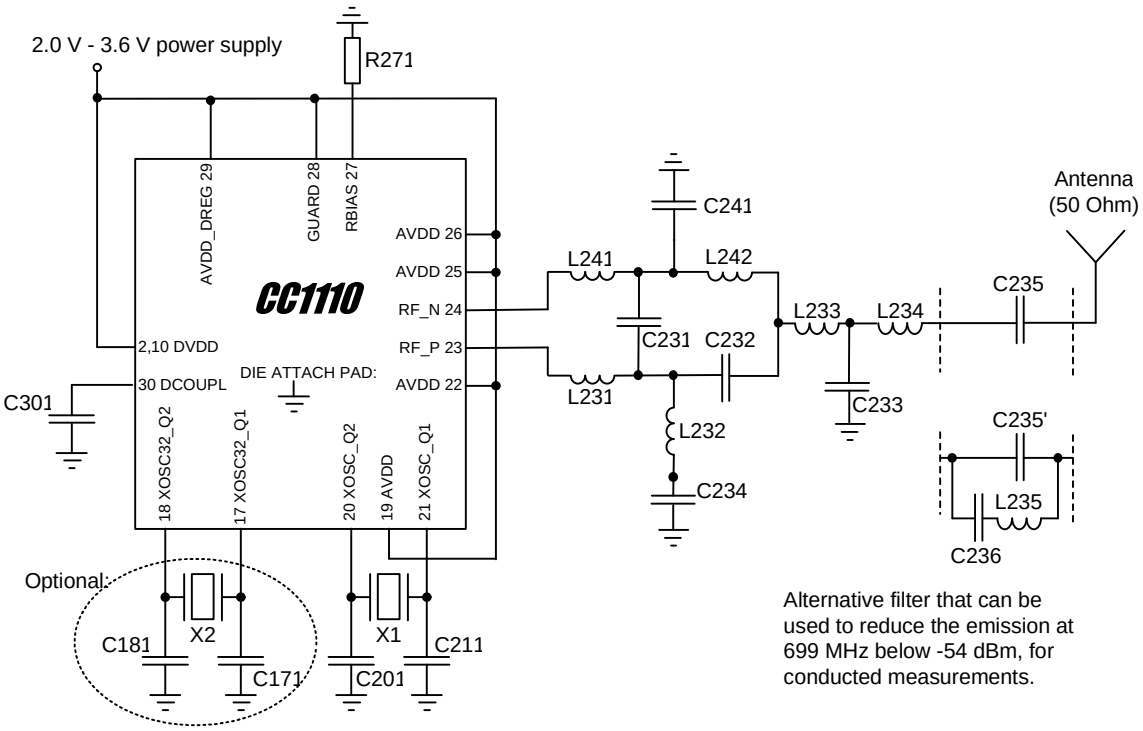

Figure 11: Application Circuit for CC1110Fx 868/915 MHz (excluding supply decoupling capacitors)

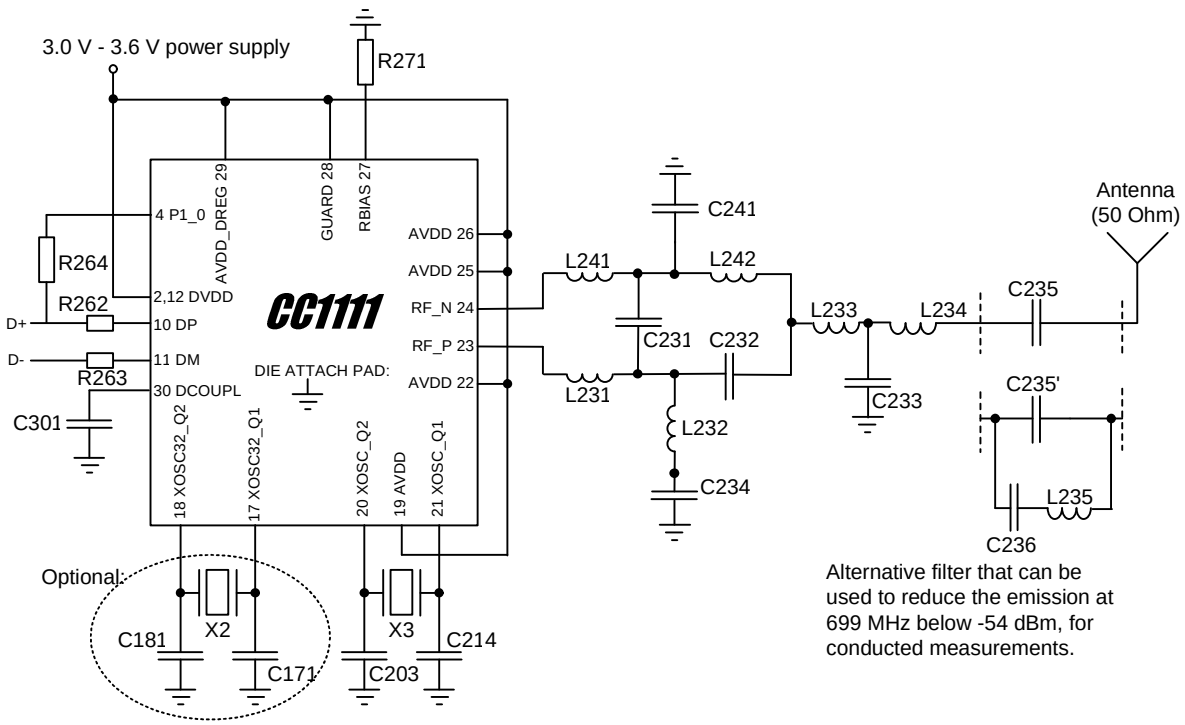

Figure 12: Application Circuit for CC1111Fx 868/915 MHz with Fundamental Crystal (excluding supply decoupling capacitors)

Component	Description
C301	Decoupling capacitor for on-chip voltage regulator to digital part
C203/C214	Crystal loading capacitors (X3)
C201/C211	Crystal loading capacitors (X1)
L231/L241/C231	Low-pass filter/match
L232/L242/C234/C241	Balun
L233/L234/C233	Filter
C234	DC block
L235/C236	Alternative filter to reduce the emission at 699 MHz
C235/C235’	DC block or part of filter to reduce emission at 699 MHz
C181/C171	Crystal loading capacitors if X2 is used.
L281	Crystal inductor
R271	Resistor for internal bias current reference
R264	D+ Pull-up resistor
R262/R263	D+ / D− series resistors for impedance matching
X1	26 - 27 MHz crystal
X2	32.768 kHz crystal, optional
X3	48 MHz crystal (fundamental)

Table 28: Overview of External Components (excluding supply decoupling capacitors)

Component	Value at 315 MHz	Value at 433 MHz	Value at 868/915 MHz	Manufacturer
C301	1 µF ± 10%, 0402 X5R			Murata GRM1555C series
C201/C211	27 pF ± 5%, 0402 NP0			Murata GRM1555C series
C203/C214			22 pF ± 5%, 0402 NP0	Murata GRM1555C series
C231	6.8 pF ± 0.5 pF, 0402 NP0	3.9 pF ± 0.25 pF, 0402 NP0	1.0 pF ± 0.25 pF, 0402 NP0	Murata GRM1555C series
C232	12 pF ± 5%, 0402 NP0	8.2 pF ± 0.5 pF, 0402 NP0	1.5 pF ± 0.25 pF, 0402 NP0	Murata GRM1555C series
C233	6.8 pF ± 0.5 pF, 0402 NP0	5.6 pF ± 0.5 pF, 0402 NP0	3.3 pF ± 0.25 pF, 0402 NP0	Murata GRM1555C series
C234	220 pF ± 5%, 0402 NP0	220 pF ± 5%, 0402 NP0	100 pF ± 5%, 0402 NP0	Murata GRM1555C series
C235	220 pF ± 5%, 0402 NP0	220 pF ± 5%, 0402 NP0	100 pF ± 5%, 0402 NP0	Murata GRM1555C series
C235’			12 pF ± 5%, 0402 NP0	Murata GRM1555C series
C236			47 pF ± 5%, 0402 NP0	Murata GRM1555C series
C241	6.8 pF ± 0.5 pF, 0402 NP0	3.9 pF ± 0.25 pF, 0402 NP0	1.5 pF ± 0.25 pF, 0402 NP0	Murata GRM1555C series
C171/C181	15pF ± 5%, 0402 NP0			Murata GRM1555C series
L231	33 nH ± 5%, 0402 monolithic	27 nH ± 5%, 0402 monolithic	12 nH ± 5%, 0402 monolithic	Murata LQG15HS series
L232	18 nH ± 5%, 0402 monolithic	22 nH ± 5%, 0402 monolithic	18 nH ± 5%, 0402 monolithic	Murata LQG15HS series
L233	33 nH ± 5%, 0402 monolithic	27 nH ± 5%, 0402 monolithic	12 nH ± 5%, 0402 monolithic	Murata LQG15HS series
L234			12 nH ± 5%, 0402 monolithic	Murata LQG15HS series
L241	33 nH ± 5%, 0402 monolithic	27 nH ± 5%, 0402 monolithic	12 nH ± 5%, 0402 monolithic	Murata LQG15HS series
L242			18 nH ± 5%, 0402 monolithic	Murata LQG15HS series
L235			3.3 nH ± 5%, 0402 monolithic	Murata LQG15HS series
R262/R263			33 Ω ± 2%, 0402	Koa RK73 series
R264			1.5 kΩ ± 1%, 0402	Koa RK73 series
R271	56 kΩ ± 1%, 0402			Koa RK73 series
X1	26.0 MHz surface mount crystal			NDK, AT-41CD2
X2	32.768 kHz surface mount crystal (optional)			Epson MC-306 Crystal Unit
X3	48 MHz surface mount crystal			Abracon ABM8 series

Table 29: Bill of Materials for the CC1110Fx/CC1111Fx Application Circuits (subject to changes)

9.7 PCB Layout Recommendations

The top layer should be used for signal routing, and the open areas should be filled with metallization connected to ground using several vias.

The area under the chip is used for grounding and shall be connected to the bottom ground plane with several vias for good thermal performance and sufficiently low inductance to ground. In the CC1110EM reference designs [1] 9 vias are placed inside the exposed die attached pad. These vias should be “tented” (covered with solder mask) on the component side of the PCB to avoid migration of solder through the vias during the solder reflow process.

The solder paste coverage should not be 100%. If it is, out gassing may occur during the reflow process, which may cause defects (splattering, solder balling). Using “tented” vias reduces the solder paste coverage below 100%.

See Figure 13 for top solder resist and top paste masks.

Each decoupling capacitor should be placed as close as possible to the supply pin it is supposed to decouple. The best routing is from the power line to the decoupling capacitor and then to the CC1110Fx supply pin. Supply power filtering is very important.

Each decoupling capacitor ground pad should be connected to the ground plane using a separate via. Direct connections between neighboring power pins will increase noise coupling and should be avoided unless absolutely necessary.

The external components should ideally be as small as possible (0402 is recommended) and surface mount devices are highly recommended. Please note that components smaller than those specified may have differing characteristics.

Schematic, BOM, and layout Gerber files are all available from the TI website for both the CC1110EM reference designs [1], [2], [3] and the CC1111 USB Dongle reference design [4].

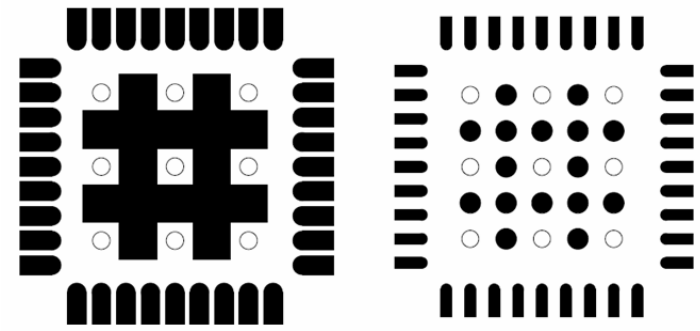

Figure 13: Left: Top Solder Resist Mask (negative). Right: Top Paste Mask. Circles are Vias.

10 8051 CPU

This section describes the 8051 CPU core, with interrupts, memory, and instruction set.

10.1 8051 Introduction

The CC1110Fx/CC1111Fx includes an 8-bit CPU core which is an enhanced version of the industry standard 8051 core.

The enhanced 8051 core uses the standard 8051 instruction set. Instructions execute faster than the standard 8051 due to the following:

- One clock per instruction cycle is used as opposed to 12 clocks per instruction cycle in the standard 8051.
- Wasted bus states are eliminated.

Since an instruction cycle is aligned with memory fetch when possible, most of the single byte instructions are performed in a single clock cycle. In addition to the speed

improvement, the enhanced 8051 core also includes architectural enhancements:

- A second data pointer
- Extended 18-source interrupt unit

The 8051 core is object code compatible with the industry standard 8051 microcontroller. That is, object code compiled with an industry standard 8051 compiler or assembler executes on the 8051 core and is functionally equivalent. However, because the 8051 core uses a different instruction-timing than many other 8051 variants, existing code with timing loops may require modification. Also because the peripheral units such as timers and serial ports differ from those on other 8051 cores, code which includes instructions using the peripheral units SFRs will not work correctly.

10.2 Memory

The 8051 CPU architecture has four different memory spaces. The 8051 has separate memory spaces for program memory and data memory. The 8051 memory spaces are the following (see Section 10.2.1 and 10.2.2 for details):

CODE. A 16-bit read-only memory space for program memory.

DATA. An 8-bit read/write data memory space, which can be directly or indirectly, accessed by a single cycle CPU instruction, thus allowing fast access. The lower 128 bytes of the DATA memory space can be addressed either directly or indirectly, the upper 128 bytes only indirectly.

XDATA. A 16-bit read/write data memory space, which usually requires 4 - 5 CPU instruction cycles to access, thus giving slow access. XDATA assesses is also slower in hardware than DATA accesses as the CODE and XDATA memory spaces share a common bus on the CPU core (instruction pre-fetch from CODE can not be performed in parallel with XDATA accesses).

SFR. A 7-bit read/write register memory space, which can be directly accessed by a single CPU instruction. For SFRs whose address is divisible by eight, each bit is also individually addressable.

The four different memory spaces are distinct in the 8051 architecture, but are partly overlapping in the CC1110Fx/CC1111Fx to ease DMA transfers and hardware debugger operation.

How the different memory spaces are mapped onto the three physical memories (8/16/32 KB flash program memory, 1/2/4 KB SRAM, and hardware registers (SFR, radio, I^2S, and USB (CC1111Fx)) is described in Sections 10.2.1 and 10.2.2.

10.2.1 Memory Map

This section gives an overview of the memory map.

Both the DATA and the SFR memory space is mapped to the XDATA and CODE memory space as shown in Figure 14, Figure 15, and Figure 16 (the CODE and XDATA memory spaces are mapped identically), and CC1110FX/CC1111FX has what can be called a unified memory space.

Mapping all the memory spaces to XDATA allows the DMA controller access to all physical memory and thus allows DMA transfers between the different 8051 memory spaces. This also means that any instruction that read, write, or manipulate an XDATA variable can be used on the entire unified memory space, except writing to or changing data in flash.

Mapping all memory spaces to the CODE memory space is primarily done to allow program execution out of the SRAM/XDATA.

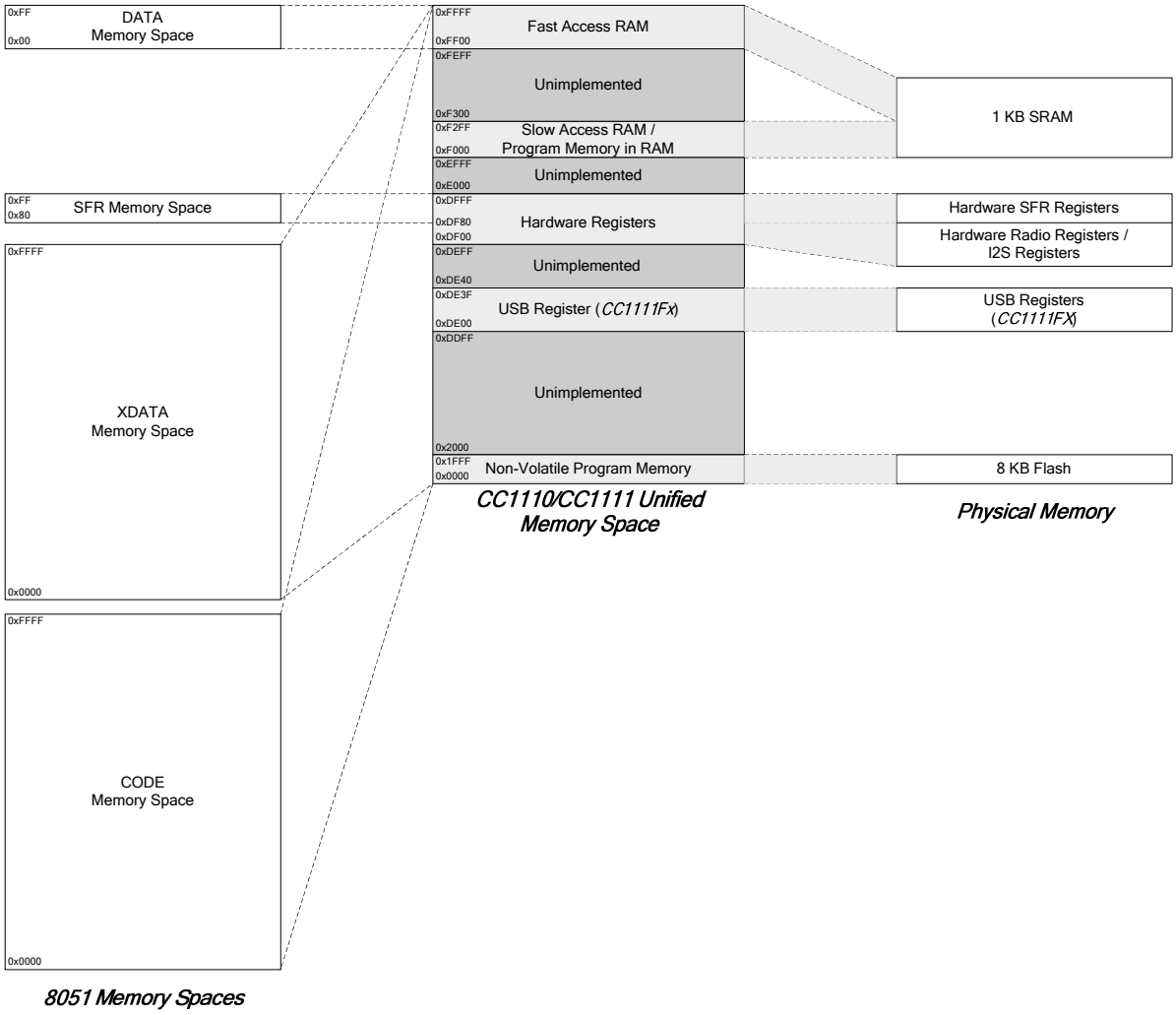

Figure 14: CC1110F8/CC1111F8 Memory Mapping

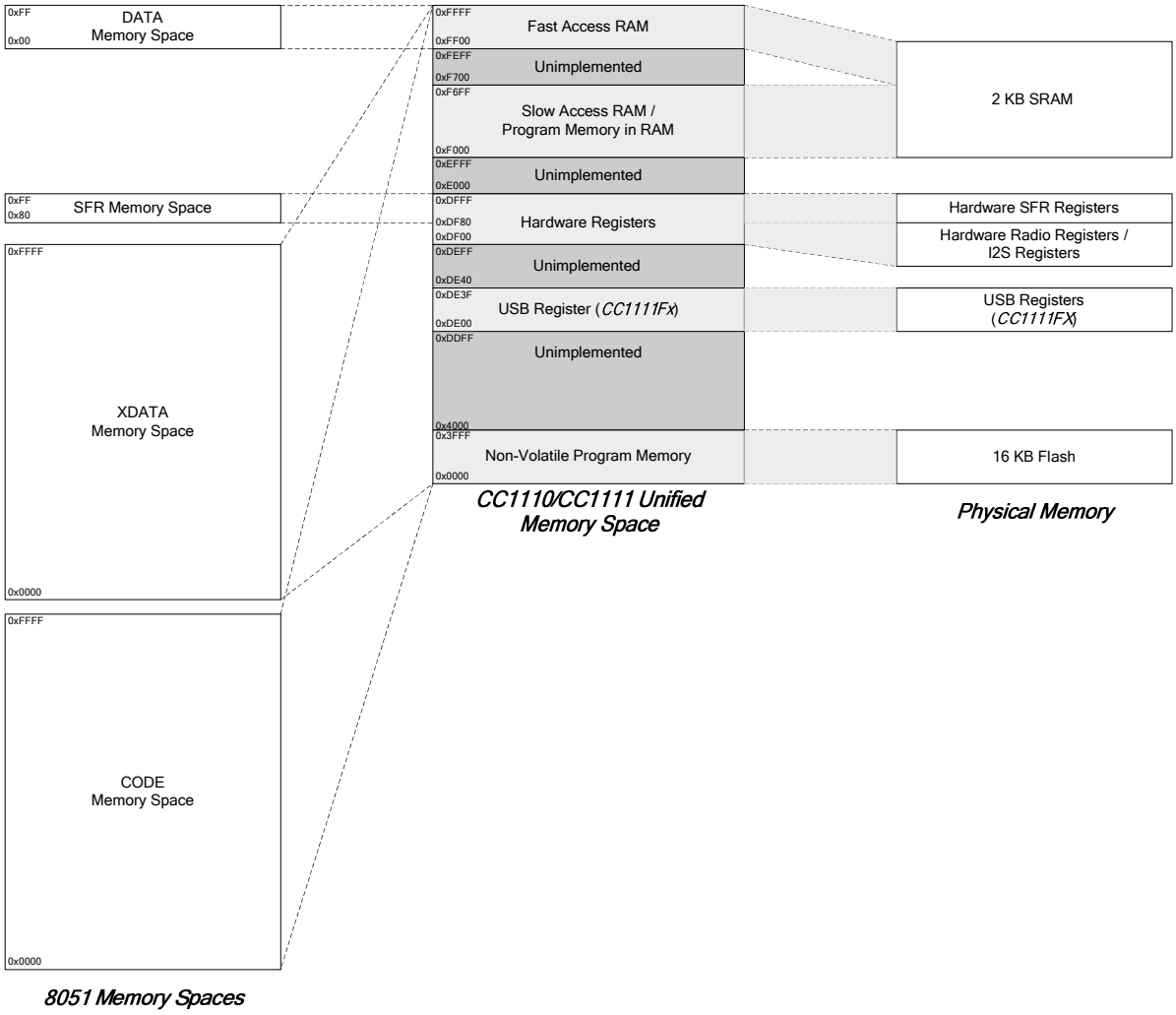

Figure 15: CC1110F16/CC1111F16 Memory Mapping

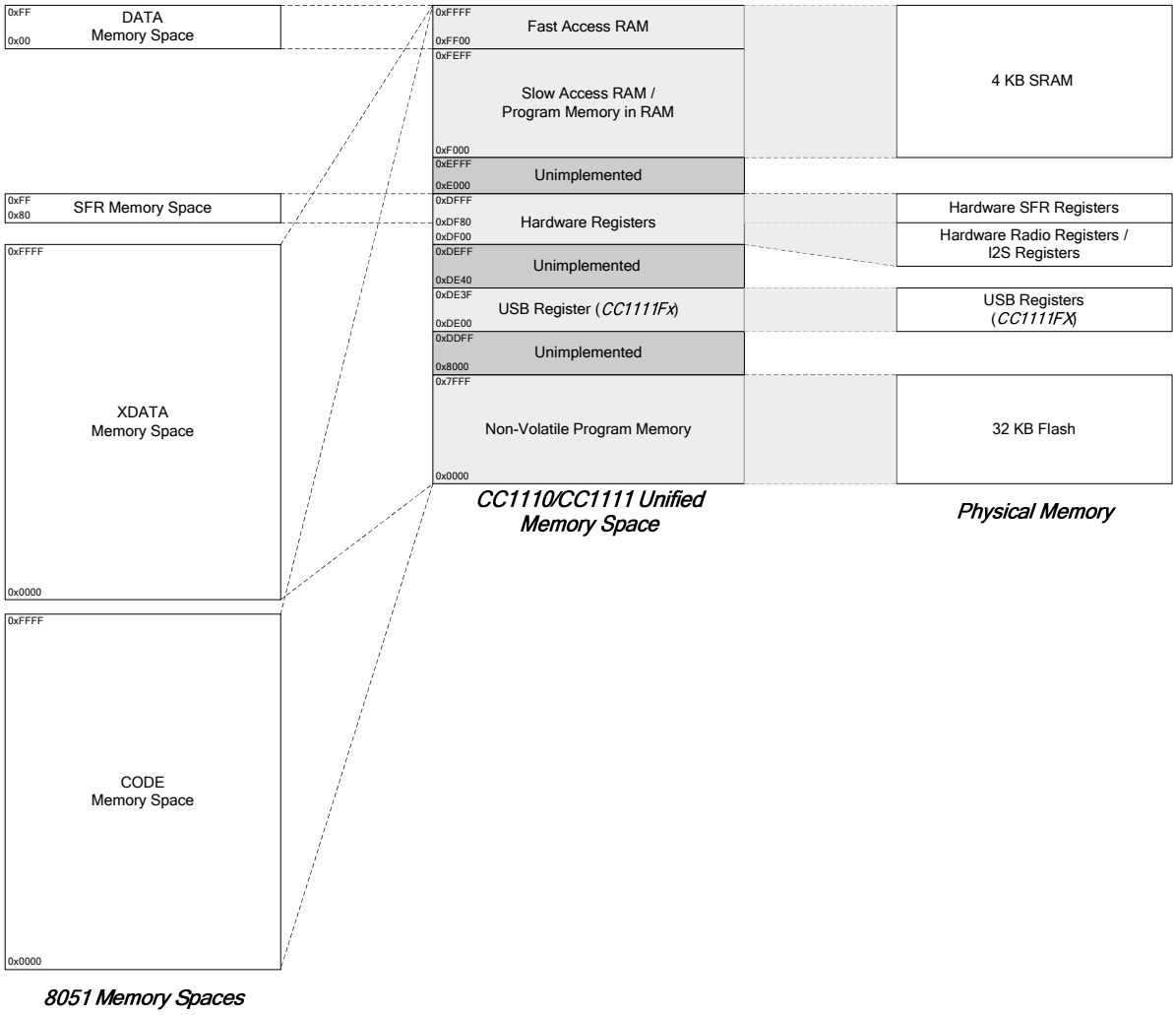

Figure 16: CC1110F32/CC1111F32 Memory Mapping

Details about the mapping of all 8051 memory spaces are given in the next section.

10.2.2 8051 Memory Space

This section describes the details of each standard 8051 memory space. Any differences between the standard 8051 and **CC1110Fx/CC1111Fx** is described.

10.2.2.1 XDATA Memory Space

On a standard 8051 this memory space would hold any extra RAM available.

The 8, 16, and 32 KB flash program memory is mapped into the address ranges 0x0000 - 0x1FFF, 0x0000 - 0x3FFF, and 0x0000 - 0x7FFF respectively.

The **CC1110Fx/CC1111Fx** has a total of 1, 2, or 4 KB SRAM, starting at address 0xF000. Compilers/assemblers must take into consideration that the first address of usable SRAM start at 0xF000 instead of 0x0000.

The 350 bytes of XDATA in location 0xFDA2 - 0xFEFF on **CC1110F32** and **CC1111F32** do not retain data when power modes PM2 or PM3 are entered. Refer to Section 12.1.2 on Page 77 for a detailed description of power modes.

The 256 bytes from 0xFF00 to 0xFFFF are the DATA memory space mapped to XDATA. These bytes are also reached through the DATA memory space.

In addition the following is mapped into the XDATA memory space:

- Radio registers are mapped into address range 0xDF00 - 0xDF3D.
- I^2S registers are mapped into the address range 0xDF40 - 0xDF48.
- All SFR except the registers shown in gray in Table 30 are mapped into address range 0xDF80 - 0xDFFF.

- The USB registers are mapped into the address range 0xDE00 - 0xDE3F on the **CC1111Fx**, but are not implemented on the **CC1110Fx**.

This memory mapping allows the DMA controller (and the CPU) access to all the physical memories in a single unified address space.

Be aware that access to unimplemented areas in the unified memory space will give an undefined result.

10.2.2.2 CODE Memory Space

On a standard 8051 this memory space would hold the program memory, where the MCU reads the program/instructions.

All memory spaces are mapped into the CODE memory space and the mapping is identical to the XDATA memory space, hence the **CC1110Fx/CC1111Fx** has what can be referred to as a unified memory space.

Due to this, the **CC1110Fx/CC1111Fx** allows execution of a program stored in SRAM. This allows the program to be easily updated without writing to flash (which have a limited erase/write cycles) This is particularly useful on the **CC1111Fx**, where parts of the firmware can be downloaded from the windows USB driver.

Executing a program from SRAM instead of flash will also result in a lower power consumption and may be interesting for battery powered devices.

10.2.2.3 DATA Memory Space

The 8-bit address range of DATA memory space is mapped into address 0xFF00 - 0xFFFF and is accessible through the unified memory space. Just like on a standard 8051, the upper 128 byte share address with the SFR and can only be accessed indirectly, the stack is normally located here. The lower 48 bytes are reserved, and hold 4 register banks used by the MCU. The 16 bytes on addresses 0x20 to 0x2F are bit addressable.

The DATA memory will retain its contents in all four power modes.

10.2.2.4 SFR Memory Space

The SFR memory space is identical to a standard 8051.

The 128 hardware SFRs are accessed through this memory space.

Unlike on a standard 8051, the SFRs are also accessible through the XDATA and CODE memory space at the address range 0xDF80 - 0xDFFF.

Some CPU-specific SFRs reside inside the CPU core and can only be accessed using the SFR memory space and not through the duplicate mapping into XDATA/CODE memory space. These registers are shown in gray in Table 30. Be aware that these registers can not be accessed using DMA.

10.2.3 Physical Memory

10.2.3.1 SRAM

The **CC1110Fx/CC1111Fx** contains static RAM. At power-on the contents of RAM is undefined. The RAM size is 1, 2, or 4 KB in total, mapped to the memory range 0xF000 - 0xFFFF. In the **F8** version, memory range 0xF300 - 0xFEFF is unimplemented while on the **F16** version, memory range 0xF700 - 0xFEFF is unimplemented.

The memory locations 0xFDA2 - 0xFEFF on the **F32** version consist of 350 bytes in unified memory space which do not retain data when power modes PM2 or PM3 is entered. All other RAM memory locations are retained in all power modes.

10.2.3.2 Flash Memory

The on-chip flash memory consists of 8192, 16384, or 32768 bytes (**F8**, **F16**, and **F32**). The flash memory is primarily intended to hold program code. The flash memory has the following features:

- Flash page erase time: 20 ms
- Flash chip (mass) erase time: 200 ms
- Flash write time (2 bytes): 20 µs
- Data retention (at room temperature): 100 years
- Program/erase endurance: Minimum 1,000 cycles

The flash memory consists of the Flash Main Pages (up to 32 times 1 KB) which are where the CPU reads program code and data. The flash memory also contains a Flash Information Page (1 KB) which contains the Flash Lock Bits. The lock protect bits are written as a normal flash write to FWDATA but the Debug Interface needs to select the Flash Information Page first instead of the Flash Main Page. The Information Page is selected through the Debug Configuration which is

written through the Debug Interface only. The Flash Controller (see Section 12.3) is used to write and erase the contents of the flash main memory.

When the CPU reads instructions from flash memory, it fetches the next instruction through a cache. The instruction cache is provided mainly to reduce power consumption by reducing the amount of time the flash memory itself is accessed. The use of the instruction cache may be disabled with the `MEMCTR.CACHDIS` register bit, but doing so will increase power consumption.

10.2.3.3 Special Function Registers

The Special Function Registers (SFRs) control several of the features of the 8051 CPU core and/or peripherals. Many of the 8051 core SFRs are identical to the standard 8051 SFRs. However, there are additional SFRs that control features that are not available in the standard 8051. The additional SFRs are used to interface with the peripheral units and RF transceiver.

Table 30 shows the address to all SFRs in ***CC1110Fx/CC1111Fx***. The 8051 internal SFRs are shown with grey background, while the other SFRs are specific to ***CC1110Fx/CC1111Fx***.

Note: All internal SFRs (shown with grey background in Table 30, can only be accessed through SFR memory space as these registers are not mapped into XDATA memory space.

Table 31 lists the additional SFRs that are not standard 8051 peripheral SFRs or CPU-internal SFRs. The additional SFRs are described in the relevant sections for each peripheral function.

	8 Bytes								
80	P0	SP	DPL0	DPH0	DPL1	DPH1	U0CSR	PCON	87
88	TCON	P0IFG	P1IFG	P2IFG	PICTL	P1IEN		P0INP	8F
90	P1	RFIM	DPS	MPAGE		ENDIAN			97
98	S0CON		IEN2	S1CON	T2CT	T2PR	T2CTL		9F
A0	P2	WORIRQ	WORCTRL	WOREVT0	WOREVT1	WORTIME0	WORTIME1		A7
A8	IEN0	IP0		FWT	FADDRL	FADDRH	FCTL	FWDATA	AF
B0		ENCDI	ENCDO	ENCCS	ADCCON1	ADCCON2	ADCCON3		B7
B8	IEN1	IP1	ADCL	ADCH	RNDL	RNDH	SLEEP		BF
C0	IRCON	U0DBUF	U0BAUD		U0UCR	U0GCR	CLKCON	MEMCTR	C7
C8		WDCTL	T3CNT	T3CTL	T3CCTL0	T3CC0	T3CCTL1	T3CC1	CF
D0	PSW	DMAIRQ	DMA1CFGL	DMA1CFGH	DMA0CFGL	DMA0CFGH	DMAARM	DMAREQ	D7
D8	TIMIF	RFD	T1CC0L	T1CC0H	T1CC1L	T1CC1H	T1CC2L	T1CC2H	DF
E0	ACC	RFST	T1CNTL	T1CNTH	T1CTL	T1CCTL0	T1CCTL1	T1CCTL2	E7
E8	IRCON2	RFIF	T4CNT	T4CTL	T4CCTL0	T4CC0	T4CCTL1	T4CC1	EF
F0	B	PERCFG	ADCCFG	P0SEL	P1SEL	P2SEL	P1INP	P2INP	F7
F8	U1CSR	U1DBUF	U1BAUD	U1UCR	U1GCR	P0DIR	P1DIR	P2DIR	FF

Table 30: SFR Address Overview

Register Name	SFR Address	Module	Description	Retention[6]
ADCCON1	0xB4	ADC	ADC Control 1	Y
ADCCON2	0xB5	ADC	ADC Control 2	Y
ADCCON3	0xB6	ADC	ADC Control 3	Y
ADCL	0xBA	ADC	ADC Data Low	Y
ADCH	0xBB	ADC	ADC Data High	Y
RNDL	0xBC	ADC	Random Number Generator Data Low	Y
RNDH	0xBD	ADC	Random Number Generator Data High	Y
ENCDI	0xB1	AES	Encryption/Decryption Input Data	N
ENCDO	0xB2	AES	Encryption/Decryption Output Data	N
ENCCS	0xB3	AES	Encryption/Decryption Control and Status	N
DMAIRQ	0xD1	DMA	DMA Interrupt Flag	Y
DMA1CFGL	0xD2	DMA	DMA Channel 1 - 4 Configuration Address Low	Y
DMA1CFGH	0xD3	DMA	DMA Channel 1 - 4 Configuration Address High	Y
DMA0CFGL	0xD4	DMA	DMA Channel 0 Configuration Address Low	Y
DMA0CFGH	0xD5	DMA	DMA Channel 0 Configuration Address High	Y
DMAARM	0xD6	DMA	DMA Channel Arm	Y
DMAREQ	0xD7	DMA	DMA Channel Start Request and Status	Y
FWT	0xAB	FLASH	Flash Write Timing	Y
FADDRL	0xAC	FLASH	Flash Address Low	Y
FADDRH	0xAD	FLASH	Flash Address High	Y
FCTL	0xAE	FLASH	Flash Control	[7:1]Y, [1:0]N
FWDATA	0xAF	FLASH	Flash Write Data	Y
P0IFG	0x89	IOC	Port 0 Interrupt Status Flag	Y
P1IFG	0x8A	IOC	Port 1 Interrupt Status Flag	Y
P2IFG	0x8B	IOC	Port 2 Interrupt Status Flag	Y
PICTL	0x8C	IOC	Port Pins Interrupt Mask and Edge	Y
P1IEN	0x8D	IOC	Port 1 Interrupt Mask	Y
P0INP	0x8F	IOC	Port 0 Input Mode	Y
PERCFG	0xF1	IOC	Peripheral I/O Control	Y
ADCCFG	0xF2	IOC	ADC Input Configuration	Y
P0SEL	0xF3	IOC	Port 0 Function Select	Y
P1SEL	0xF4	IOC	Port 1 Function Select	Y
P2SEL	0xF5	IOC	Port 2 Function Select	Y
P1INP	0xF6	IOC	Port 1 Input Mode	Y
P2INP	0xF7	IOC	Port 2 Input Mode	Y
P0DIR	0xFD	IOC	Port 0 Direction	Y
P1DIR	0xFE	IOC	Port 1 Direction	Y
P2DIR	0xFF	IOC	Port 2 Direction	Y
MEMCTR	0xC7	MEMORY	Memory System Control	Y

[6] Registers without retention are in their reset state after PM2 or PM3. This is only applicable for registers / bits that are defined as R/W

Register Name	SFR Address	Module	Description	Retention[6]
SLEEP	0xBE	PMC	Sleep Mode Control	[6:2]Y, [7,1:0]N
CLKCON	0xC6	PMC	Clock Control	Y
RFIM	0x91	RF	RF Interrupt Mask	Y
RFD	0xD9	RF	RF Data	N
RFIF	0xE9	RF	RF Interrupt flags	Y
RFST	0xE1	RF	RF Strobe Commands	NA
WORIRQ	0xA1	Sleep Timer	Sleep Timer Interrupts	Y
WORCTRL	0xA2	Sleep Timer	Sleep Timer Control	Y
WOREVT0	0xA3	Sleep Timer	Sleep Timer Event 0 Timeout Low Byte	Y
WOREVT1	0xA5	Sleep Timer	Sleep Timer Event 0 Timeout High Byte	Y
WORTIME0	0xA4	Sleep Timer	Sleep Timer Low Byte	Y
WORTIME1	0xA6	Sleep Timer	Sleep Timer High Byte	Y
T1CC0L	0xDA	Timer1	Timer 1 Channel 0 Capture/Compare Value Low	Y
T1CC0H	0xDB	Timer1	Timer 1 Channel 0 Capture/Compare Value High	Y
T1CC1L	0xDC	Timer1	Timer 1 Channel 1 Capture/Compare Value Low	Y
T1CC1H	0xDD	Timer1	Timer 1 Channel 1 Capture/Compare Value High	Y
T1CC2L	0xDE	Timer1	Timer 1 Channel 2 Capture/Compare Value Low	Y
T1CC2H	0xDF	Timer1	Timer 1 Channel 2 Capture/Compare Value High	Y
T1CNTL	0xE2	Timer1	Timer 1 Counter Low	Y
T1CNTH	0xE3	Timer1	Timer 1 Counter High	Y
T1CTL	0xE4	Timer1	Timer 1 Control and Status	Y
T1CCTL0	0xE5	Timer1	Timer 1 Channel 0 Capture/Compare Control	Y
T1CCTL1	0xE6	Timer1	Timer 1 Channel 1 Capture/Compare Control	Y
T1CCTL2	0xE7	Timer1	Timer 1 Channel 2 Capture/Compare Control	Y
T2CT	0x9C	Timer2	Timer 2 Timer Count	N
T2PR	0x9D	Timer2	Timer 2 Prescaler	N
T2CTL	0x9E	Timer2	Timer 2 Control	N
T3CNT	0xCA	Timer3	Timer 3 Counter	Y
T3CTL	0xCB	Timer3	Timer 3 Control	Y,[2]N
T3CCTL0	0xCC	Timer3	Timer 3 Channel 0 Capture/Compare Control	Y
T3CC0	0xCD	Timer3	Timer 3 Channel 0 Capture/Compare Value	Y
T3CCTL1	0xCE	Timer3	Timer 3 Channel 1 Capture/Compare Control	Y
T3CC1	0xCF	Timer3	Timer 3 Channel 1 Capture/Compare Value	Y
T4CNT	0xEA	Timer4	Timer 4 Counter	Y
T4CTL	0xEB	Timer4	Timer 4 Control	Y,[2]N
T4CCTL0	0xEC	Timer4	Timer 4 Channel 0 Capture/Compare Control	Y
T4CC0	0xED	Timer4	Timer 4 Channel 0 Capture/Compare Value	Y
T4CCTL1	0xEE	Timer4	Timer 4 Channel 1 Capture/Compare Control	Y
T4CC1	0xEF	Timer4	Timer 4 Channel 1 Capture/Compare Value	Y
TIMIF	0xD8	TMINT	Timers 1/3/4 Joint Interrupt Mask/Flags	Y
U0CSR	0x86	USART0	USART 0 Control and Status	Y
U0DBUF	0xC1	USART0	USART 0 Receive/Transmit Data Buffer	Y

Register Name	SFR Address	Module	Description	Retention[6]
U0BAUD	0xC2	USART0	USART 0 Baud Rate Control	Y
U0UCR	0xC4	USART0	USART 0 UART Control	Y,[7]N
U0GCR	0xC5	USART0	USART 0 Generic Control	Y
U1CSR	0xF8	USART1	USART 1 Control and Status	Y
U1DBUF	0xF9	USART1	USART 1 Receive/Transmit Data Buffer	Y
U1BAUD	0xFA	USART1	USART 1 Baud Rate Control	Y
U1UCR	0xFB	USART1	USART 1 UART Control	Y,[7]N
U1GCR	0xFC	USART1	USART 1 Generic Control	Y
ENDIAN	0x95	MEMORY	USB Endianess Control (CC1111Fx)	Y
WDCTL	0xC9	WDT	Watchdog Timer Control	Y

Table 31: CC1110Fx/CC1111Fx Specific SFR Overview

10.2.3.4 Radio Registers

The radio registers are all related to Radio configuration and control. The RF registers can only be accessed through XDATA memory space and reside in address range 0xDF00 - 0xDF3D.

Table 32 gives a descriptive overview of these registers. Each register is described in detail in Section 13.19, starting on Page 210.

XDATA Address	Register	Description	Retention[7]
0xDF00	SYNC1	Sync word, high byte	Y
0xDF01	SYNC0	Sync word, low byte	Y
0xDF02	PKTLEN	Packet length	Y
0xDF03	PKTCTRL1	Packet automation control	Y
0xDF04	PKTCTRL0	Packet automation control	Y
0xDF05	ADDR	Device address	Y
0xDF06	CHANNR	Channel number	Y
0xDF07	FSCTRL1	Frequency synthesizer control	Y
0xDF08	FSCTRL0	Frequency synthesizer control	Y
0xDF09	FREQ2	Frequency control word, high byte	Y
0xDF0A	FREQ1	Frequency control word, middle byte	Y
0xDF0B	FREQ0	Frequency control word, low byte	Y
0xDF0C	MDMCFG4	Modem configuration	Y
0xDF0D	MDMCFG3	Modem configuration	Y
0xDF0E	MDMCFG2	Modem configuration	Y
0xDF0F	MDMCFG1	Modem configuration	Y
0xDF10	MDMCFG0	Modem configuration	Y
0xDF11	DEVIATN	Modem deviation setting	Y
0xDF12	MCSM2	Main Radio Control State Machine configuration	Y
0xDF13	MCSM1	Main Radio Control State Machine configuration	Y

[7] Registers without retention are in their reset state after PM2 or PM3. This is only applicable for registers / bits that are defined as R/W

XDATA Address	Register	Description	Retention[7]
0xDF14	MCSM0	Main Radio Control State Machine configuration	Y
0xDF15	FOCCFG	Frequency Offset Compensation configuration	Y
0xDF16	BSCFG	Bit Synchronization configuration	Y
0xDF17	AGCCTRL2	AGC control	Y
0xDF18	AGCCTRL1	AGC control	Y
0xDF19	AGCCTRL0	AGC control	Y
0xDF1A	FREND1	Front end RX configuration	Y
0xDF1B	FREND0	Front end TX configuration	Y
0xDF1C	FSCAL3	Frequency synthesizer calibration	N
0xDF1D	FSCAL2	Frequency synthesizer calibration	N
0xDF1E	FSCAL1	Frequency synthesizer calibration	N
0xDF1F	FSCAL0	Frequency synthesizer calibration	Y
0xDF20 - 0xDF22		Reserved	Y
0xDF23	TEST2	Various Test Settings	Y
0xDF24	TEST1	Various Test Settings	Y
0xDF25	TEST0	Various Test Settings	Y
0xDF27	PA_TABLE7	PA output power setting 7	Y
0xDF28	PA_TABLE6	PA output power setting 6	Y
0xDF29	PA_TABLE5	PA output power setting 5	Y
0xDF2A	PA_TABLE4	PA output power setting 4	Y
0xDF2B	PA_TABLE3	PA output power setting 3	Y
0xDF2C	PA_TABLE2	PA output power setting 2	Y
0xDF2D	PA_TABLE1	PA output power setting 1	Y
0xDF2E	PA_TABLE0	PA output power setting 0	Y
0xDF2F	IOCFG2	Radio test signal configuration (P1_7)	Y
0xDF30	IOCFG1	Radio test signal configuration (P1_6)	Y
0xDF31	IOCFG0	Radio test signal configuration (P1_5)	Y
0xDF36	PARTNUM	Chip ID[15:8]	NA
0xDF37	VERSION	Chip ID[7:0]	NA
0xDF38	FREQEST	Frequency Offset Estimate	NA
0xDF39	LQI	Link Quality Indicator	NA
0xDF3A	RSSI	Received Signal Strength Indication	NA
0xDF3B	MARCSTATE	Main Radio Control State	NA
0xDF3C	PKTSTATUS	Packet status	NA
0xDF3D	VCO_VC_DAC	PLL calibration current	NA

Table 32: Overview of RF Registers

10.2.3.5 I^2S Registers

The I^2S registers are all related to I^2S configuration and control. The I^2S registers can only be accessed through XDATA memory space and reside in address range 0xDF40 - 0xDF48. Table 33 gives a descriptive overview of these registers. Each register is described in detail in Section 12.15.13, starting on Page 165.

XDATA Address	Register	Description	Retention[8]
0xDF40	I2SCFG0	I^2S Configuration Register 0	Y
0xDF41	I2SCFG1	I^2S Configuration Register 1	Y
0xDF42	I2SDATL	I^2S Data Low Byte	N
0xDF43	I2SDATH	I^2S Data High Byte	N
0xDF44	I2SWCNT	I^2S Word Count Register	NA
0xDF45	I2SSTAT	I^2S Status Register	NA
0xDF46	I2SCLKF0	I^2S Clock Configuration Register 0	Y
0xDF47	I2SCLKF1	I^2S Clock Configuration Register 1	Y
0xDF48	I2SCLKF2	I^2S Clock Configuration Register 2	Y

Table 33: Overview of I^2S Registers

[8] Registers without retention are in their reset state after PM2 or PM3. This is only applicable for registers / bits that are defined as R/W

10.2.3.6 USB Registers

The USB registers are all related to USB configuration and control. The USB registers can only be accessed through XDATA memory space and reside in address range 0xDE00 - 0xDE3F. These registers can be divided into three groups: The Common USB Registers (Table 34), The Indexed Endpoint Registers (Table 35), and the Endpoint FIFO Registers (Table 36). Each register is described in detail in Section 12.16.11, starting on Page 177. Notice that the upper register addresses 0xDE2C - 0xDE3F are reserved.

Note: All USB registers lose data in PM2 and PM3, meaning that these power modes cannot be used on the ***CC1111Fx***

XDATA Address	Register	Description
0xDE00	USBADDR	Function Address
0xDE01	USBPOW	Power/Control Register
0xDE02	USBIIF	IN Endpoints and EP0 Interrupt Flags
0xDE03		Reserved
0xDE04	USBOIF	OUT Endpoints Interrupt Flags
0xDE05		Reserved
0xDE06	USBCIF	Common USB Interrupt Flags
0xDE07	USBIIE	IN Endpoints and EP0 Interrupt Enable Mask
0xDE08		Reserved
0xDE09	USBOIE	Out Endpoints Interrupt Enable Mask
0xDE0A		Reserved
0xDE0B	USBCIE	Common USB Interrupt Enable Mask
0xDE0C	USBFRML	Current Frame Number (Low byte)
0xDE0D	USBFRMH	Current Frame Number (High byte)
0xDE0E	USBINDEX	Selects current endpoint. Make sure this register has the required value before any of the registers in Table 35 are accessed. This register must be set to a value in the range 0 - 5.

Table 34: Overview of Common USB Registers

XDATA Address	Register	Description	Valid USBINDEX Value(s)
0xDE10	USBMAXI	Max. packet size for IN endpoint	1 - 5
0xDE11	USBCS0	EP0 Control and Status (USBINDEX = 0)	0
	USBCSIL	IN EP{1 - 5} Control and Status Low	1 - 5
0xDE12	USBCSIH	IN EP{1 - 5} Control and Status High	1 - 5
0xDE13	USBMAXO	Max. packet size for OUT endpoint	1 - 5
0xDE14	USBCSOL	OUT EP{1 - 5} Control and Status Low	1 - 5
0xDE15	USBCSOH	OUT EP{1 - 5} Control and Status High	1 - 5
0xDE16	USBCNT0	Number of received bytes in EP0 FIFO (USBINDEX = 0)	0
	USBCNTL	Number of bytes in OUT FIFO Low	1 - 5
0xDE17	USBCNTH	Number of bytes in OUT FIFO High	1 - 5

Table 35: Overview of Indexed Endpoint Registers

XDATA Address	Register	Description
0xDE20	USBF0	Endpoint 0 FIFO
0xDE22	USBF1	Endpoint 1 FIFO
0xDE24	USBF2	Endpoint 2 FIFO
0xDE26	USBF3	Endpoint 3 FIFO
0xDE28	USBF4	Endpoint 4 FIFO
0xDE2A	USBF5	Endpoint 5 FIFO

Table 36: Overview of Endpoint FIFO Registers

10.2.4 XDATA Memory Access

The **CC1110Fx/CC1111Fx** provides an additional SFR named `MPAGE`. This register is used during instructions MOVX A,@Ri and MOVX @Ri,A. `MPAGE` gives the 8 most significant address bits, while the register `Ri` gives the 8 least significant bits.

In some 8051 implementations, this type of XDATA access is performed using `P2` to give the most significant address bits. Existing software may therefore have to be adapted to make use of `MPAGE` instead of `P2`.

MPAGE (0x93) - Memory Page Select

Bit	Field Name	Reset	R/W	Description
7:0	MPAGE[7:0]	0x00	R/W	Memory page, high-order bits of address in MOVX instruction

10.2.5 Memory Arbiter

The **CC1110Fx/CC1111Fx** includes a memory arbiter which handles CPU and DMA access to all memory space.

A control register `MEMCTR` is used to control the flash cache. The `MEMCTR` register is described below.

MEMCTR (0xC7) - Memory Arbiter Control

Bit	Field Name	Reset	R/W	Description	
7:2		0	R/W	Not used	
1	CACHDIS	0	R/W	Flash cache disable. Invalidates contents of instruction cache and forces all instruction read accesses to read straight from flash memory. Disabling will increase power consumption and is provided for debug purposes.	
				0	Cache enabled
				1	Cache disabled
0	PREFDIS	1	R/W	Flash prefetch disable. When set prefetch of flash data is disabled, when cleared the next two bytes in flash are fetched when last byte in cache is read.	
				0	Prefetch enabled
				1	Prefetch disabled

10.3 CPU Registers

This section describes the internal registers found in the CPU.

10.3.1 Data Pointers

The ***CC1110Fx/CC1111Fx*** has two data pointers, DPTR0 and DPTR1, to accelerate the movement of data blocks to/from memory. The data pointers are generally used to access CODE or XDATA space e.g.

```
MOVC A,@A+DPTR
```

```
MOV A,@DPTR.
```

The data pointer select bit, bit 0 in the Data Pointer Select register `DPS`, chooses which data pointer to use during the execution of an instruction that uses the data pointer, e.g. in one of the above instructions.

The data pointers are two bytes wide consisting of the following SFRs:

- DPTR0 - `DPH0:DPL0`
- DPTR1 - `DPH1:DPL1`

DPH0 (0x83) - Data Pointer 0 High Byte

Bit	Field Name	Reset	R/W	Description
7:0	DPH0[7:0]	0	R/W	Data pointer 0, high byte

DPL0 (0x82) - Data Pointer 0 Low Byte

Bit	Field Name	Reset	R/W	Description
7:0	DPL0[7:0]	0	R/W	Data pointer 0, low byte

DPH1 (0x85) - Data Pointer 1 High Byte

Bit	Field Name	Reset	R/W	Description
7:0	DPH1[7:0]	0	R/W	Data pointer 1, high byte

DPL1 (0x84) - Data Pointer 1 Low Byte

Bit	Field Name	Reset	R/W	Description
7:0	DPL1[7:0]	0	R/W	Data pointer 1, low byte

DPS (0x92) - Data Pointer Select

Bit	Field Name	Reset	R/W	Description	
7:1		0	R/W	Not used	
0	DPS	0	R/W	Data pointer select	
				0	DPTR0
				1	DPTR1

10.3.2 Registers R0 - R7

The **CC1110Fx/CC1111Fx** provides four register banks of eight registers each. These register banks are in the DATA memory space at addresses 0x00 - 0x07, 0x08 - 0x0F, 0x10 - 0x17 and 0x18 - 0x1F and are mapped to address range 0xFF00 to 0xFF1F in the unified memory space. Each register bank contains the eight 8-bit register `R0` - `R7`. The register bank to be used is selected through the Program Status Word `PSW.RS[1:0]`.

10.3.3 Program Status Word

The Program Status Word (PSW) contains several bits that show the current state of the CPU. The Program Status Word is accessible as an SFR and it is bit-addressable. The `PSW` register contains the Carry flag, Auxiliary Carry flag for BCD operations, Register Select bits, Overflow flag, and Parity flag. Two bits in `PSW` are uncommitted and can be used as user-defined status flags.

PSW (0xD0) - Program Status Word

Bit	Field Name	Reset	R/W	Description	
7	CY	0	R/W	Carry flag. Set to 1 when the last arithmetic operation resulted in a carry (during addition) or borrow (during subtraction), otherwise cleared to 0 by all arithmetic operations.	
6	AC	0	R/W	Auxiliary carry flag for BCD operations. Set to 1 when the last arithmetic operation resulted in a carry into (during addition) or borrow from (during subtraction) the high order nibble, otherwise cleared to 0 by all arithmetic operations.	
5	F0	0	R/W	User-defined, bit-addressable	
4:3	RS[1:0]	00	R/W	Register bank select bits. Selects which set of `R7` - `R0` registers to use from four possible register banks in DATA space.	
				00	Bank 0, 0x00 - 0x07
				01	Bank 1, 0x08 - 0x0F
				10	Bank 2, 0x10 - 0x17
				11	Bank 3, 0x18 - 0x1F
2	OV	0	R/W	Overflow flag, set by arithmetic operations. Set to 1 when the last arithmetic operation resulted in a carry (addition), borrow (subtraction), or overflow (multiply or divide). Otherwise, the bit is cleared to 0 by all arithmetic operations.	
1	F1	0	R/W	User-defined, bit-addressable	
0	P	0	R/W	Parity flag, parity of accumulator set by hardware to 1 if it contains an odd number of 1's, otherwise it is cleared to 0	

10.3.4 Accumulator

ACC is the accumulator. This is the source and destination of most arithmetic instructions, data transfer and other instructions. The mnemonic for the accumulator (in instructions involving the accumulator) refers to A instead of ACC.

ACC (0xE0) - Accumulator

Bit	Field Name	Reset	R/W	Description
7:0	ACC[7:0]	0x00	R/W	Accumulator

10.3.5 B Register

The B register is used as the second 8-bit argument during execution of multiply and divide instructions. When not used for these purposes it may be used as a scratch-pad register to hold temporary data.

B (0xF0) - B Register

Bit	Field Name	Reset	R/W	Description
7:0	B[7:0]	0x00	R/W	B register. Used in MUL and DIV instructions.

10.3.6 Stack Pointer

The stack resides in DATA memory space and grows upwards. The PUSH instruction first increments the Stack Pointer (SP) and then copies the byte into the stack. The Stack Pointer is initialized to 0x07 after a reset and it is incremented once to start from location 0x08, which is the first register (R0) of the second register bank. Thus, in order to use more than one register bank, the SP should be initialized to a different location not used for data storage.

SP (0x81) - Stack Pointer

Bit	Field Name	Reset	R/W	Description
7:0	SP[7:0]	0x07	R/W	Stack Pointer

10.4 Instruction Set Summary

The 8051 instruction set is summarized in Table 37. All mnemonics copyrighted © Intel Corporation 1980.

The following conventions are used in the instruction set summary:

- Rn - Register R7 - R0 of the currently selected register bank.
- direct - 8-bit internal data location's address. This can be DATA area (0x00 - 0x7F) or SFR area (0x80 - 0xFF).
- @Ri - 8-bit internal data location, DATA area (0x00 - 0xFF) addressed indirectly through register R1 or R0.
- #data - 8-bit constant included in instruction.
- #data16 - 16-bit constant included in instruction.
- addr16 - 16-bit destination address. Used by LCALL and LJMP. A branch can be anywhere within the 8/16/32 KB CODE memory space.
- addr11 - 11-bit destination address. Used by ACALL and AJMP. The branch will be within the same 2 KB page of program memory as the first byte of the following instruction.
- rel - Signed (two's complement) 8-bit offset byte. Used by SJMP and all conditional jumps. Range is –128 to +127 bytes relative to first byte of the following instruction.
- bit - direct addressed bit in DATA area or SFR.

The instructions that affect CPU flag settings located in PSW are listed in Table 38 on Page 60. Note that operations on the PSW register or bits in PSW will also affect the flag settings.

Mnemonic	Description	Hex Opcode	Bytes	Cycles
Arithmetic Operations				
ADD A,Rn	Add register to accumulator	0x28 - 0x2F	1	1
ADD A,direct	Add direct byte to accumulator	0x25	2	2
ADD A,@Ri	Add indirect RAM to accumulator	0x26 - 0x27	1	2
ADD A,#data	Add immediate data to accumulator	0x24	2	2
ADDC A,Rn	Add register to accumulator with carry flag	0x38 - 0x3F	1	1
ADDC A,direct	Add direct byte to A with carry flag	0x35	2	2
ADDC A,@Ri	Add indirect RAM to A with carry flag	0x36 - 0x37	1	2
ADDC A,#data	Add immediate data to A with carry flag	0x34	2	2
SUBB A,Rn	Subtract register from A with borrow	0x98 - 0x9F	1	1
SUBB A,direct	Subtract direct byte from A with borrow	0x95	2	2
SUBB A,@Ri	Subtract indirect RAM from A with borrow	0x96 - 0x97	1	2
SUBB A,#data	Subtract immediate data from A with borrow	0x94	2	2
INC A	Increment accumulator	0x04	1	1
INC Rn	Increment register	0x08 - 0x 0F	1	2
INC direct	Increment direct byte	0x05	2	3
INC @Ri	Increment indirect RAM	0x06 - 0x07	1	3
INC DPTR	Increment data pointer	0xA3	1	1
DEC A	Decrement accumulator	0x14	1	1
DEC Rn	Decrement register	0x8 - 0x1F	1	2
DEC direct	Decrement direct byte	0x15	2	3
DEC @Ri	Decrement indirect RAM	0x16 - 0x17	1	3
MUL AB	Multiply A and B	0xA4	1	5
DIV	Divide A by B	0x84	1	5
DA A	Decimal adjust accumulator	0xD4	1	1
Logical Operations				
ANL A,Rn	AND register to accumulator	0x58 - 0x5F	1	1
ANL A,direct	AND direct byte to accumulator	0x55	2	2
ANL A,@Ri	AND indirect RAM to accumulator	0x56 - 0x57	1	2
ANL A,#data	AND immediate data to accumulator	0x54	2	2
ANL direct,A	AND accumulator to direct byte	0x52	2	3
ANL direct,#data	AND immediate data to direct byte	0x53	3	4
ORL A,Rn	OR register to accumulator	0x48 - 0x4F	1	1
ORL A,direct	OR direct byte to accumulator	0x45	2	2
ORL A,@Ri	OR indirect RAM to accumulator	0x46 - 0x47	1	2
ORL A,#data	OR immediate data to accumulator	0x44	2	2
ORL direct,A	OR accumulator to direct byte	0x42	2	3
ORL direct,#data	OR immediate data to direct byte	0x43	3	4
XRL A,Rn	Exclusive OR register to accumulator	0x68 - 0x6F	1	1
XRL A,direct	Exclusive OR direct byte to accumulator	0x65	2	2
XRL A,@Ri	Exclusive OR indirect RAM to accumulator	0x66 - 0x67	1	2
XRL A,#data	Exclusive OR immediate data to accumulator	0x64	2	2
XRL direct,A	Exclusive OR accumulator to direct byte	0x62	2	3

Mnemonic	Description	Hex Opcode	Bytes	Cycles
XRL direct,#data	Exclusive OR immediate data to direct byte	0x63	3	4
CLR A	Clear accumulator	0xE4	1	1
CPL A	Complement accumulator	0xF4	1	1
RL A	Rotate accumulator left	0x23	1	1
RLC A	Rotate accumulator left through carry	0x33	1	1
RR A	Rotate accumulator right	0x03	1	1
RRC A	Rotate accumulator right through carry	0x13	1	1
SWAP A	Swap nibbles within the accumulator	0xC4	1	1
Data Transfers				
MOV A,Rn	Move register to accumulator	0xE8 - 0xEF	1	1
MOV A,direct	Move direct byte to accumulator	0xE5	2	2
MOV A,@Ri	Move indirect RAM to accumulator	0xE6 - 0xE7	1	2
MOV A,#data	Move immediate data to accumulator	0x74	2	2
MOV Rn,A	Move accumulator to register	0xF8 - 0xFF	1	2
MOV Rn,direct	Move direct byte to register	0xA8 - 0xAF	2	4
MOV Rn,#data	Move immediate data to register	0x78 - 0x7F	2	2
MOV direct,A	Move accumulator to direct byte	0xF5	2	3
MOV direct,Rn	Move register to direct byte	0x88 - 0x8F	2	3
MOV direct1,direct2	Move direct byte to direct byte	0x85	3	4
MOV direct,@Ri	Move indirect RAM to direct byte	0x86 - 0x87	2	4
MOV direct,#data	Move immediate data to direct byte	0x75	3	3
MOV @Ri,A	Move accumulator to indirect RAM	0xF6 - 0xF7	1	3
MOV @Ri,direct	Move direct byte to indirect RAM	0xA6 - 0xA7	2	5
MOV @Ri,#data	Move immediate data to indirect RAM	0x76 - 0x77	2	3
MOV DPTR,#data16	Load data pointer with a 16-bit constant	0x90	3	3
MOVC A,@A+DPTR	Move code byte relative to DPTR to accumulator	0x93	1	3
MOVC A,@A+PC	Move code byte relative to PC to accumulator	0x83	1	3
MOVX A,@Ri	Move external RAM (8-bit address) to A	0xE2 - 0xE3	1	3 - 10
MOVX A,@DPTR	Move external RAM (16-bit address) to A	0xE0	1	3 - 10
MOVX @Ri,A	Move A to external RAM (8-bit address)	0xF2 - 0xF3	1	4 - 11
MOVX @DPTR,A	Move A to external RAM (16-bit address)	0xF0	1	4 - 11
PUSH direct	Push direct byte onto stack	0xC0	2	4
POP direct	Pop direct byte from stack	0xD0	2	3
XCH A,Rn	Exchange register with accumulator	0xC8 - 0xCF	1	2
XCH A,direct	Exchange direct byte with accumulator	0xC5	2	3
XCH A,@Ri	Exchange indirect RAM with accumulator	0xC6 - 0xC7	1	3
XCHD A,@Ri	Exchange low-order nibble indirect. RAM with A	0xD6 - 0xD7	1	3

Mnemonic	Description	Hex Opcode	Bytes	Cycles
Program Branching				
ACALL addr11	Absolute subroutine call	xxx11[9]	2	6
LCALL addr16	Long subroutine call	0x12	3	6
RET	Return from subroutine	0x22	1	4
RETI	Return from interrupt	0x32	1	4
AJMP addr11	Absolute jump	xxx01[9]	2	3
LJMP addr16	Long jump	0x02	3	4
SJMP rel	Short jump (relative address)	0x80	2	3
JMP @A+DPTR	Jump indirect relative to the DPTR	0x73	1	2
JZ rel	Jump if accumulator is zero	0x60	2	3
JNZ rel	Jump if accumulator is not zero	0x70	2	3
JC rel	Jump if carry flag is set to 1	0x40	2	3
JNC	Jump if carry flag is 0	0x50	2	3
JB bit,rel	Jump if direct bit is set to 1	0x20	3	4
JNB bit,rel	Jump if direct bit is 0	0x30	3	4
JBC bit,direct rel	Jump if direct bit is set to 1 and clear the bit to 0	0x10	3	4
CJNE A,direct rel	Compare direct byte to A and jump if not equal	0xB5	3	4
CJNE A,#data rel	Compare immediate to A and jump if not equal	0xB4	3	4
CJNE Rn,#data rel	Compare immediate to reg. and jump if not equal	0xB8 - 0xBF	3	4
CJNE @Ri,#data rel	Compare immediate to indirect and jump if not equal	0xB6 -0xB7	3	4
DJNZ Rn,rel	Decrement register and jump if not zero	0xD8 - 0xDF	2	3
DJNZ direct,rel	Decrement direct byte and jump if not zero	0xD5	3	4
NOP	No operation	0x00	1	1
Boolean Variable Operations				
CLR C	Clear carry flag	0xC3	1	1
CLR bit	Clear direct bit	0xC2	2	3
SETB C	Set carry flag to 1	0xD3	1	1
SETB bit	Set direct bit to 1	0xD2	2	3
CPL C	Complement carry flag	0xB3	1	1
CPL bit	Complement direct bit	0xB2	2	3
ANL C,bit	AND direct bit to carry flag	0x82	2	2
ANL C,/bit	AND complement of direct bit to carry	0xB0	2	2
ORL C,bit	OR direct bit to carry flag	0x72	2	2
ORL C,/bit	OR complement of direct bit to carry	0xA0	2	2
MOV C,bit	Move direct bit to carry flag	0xA2	2	2
MOV bit,C	Move carry flag to direct bit	0x92	2	3
Miscellaneous				
TRAP	Set SW breakpoint in debug mode	0xA5	1	1

Table 37: Instruction Set Summary

[9] addr11[10:8] is mapped into bits 7:5 of the first instruction byte (i.e. the opcode). addr11[7:0] is mapped into the second instruction byte

Instruction	CY	OV	AC
ADD	x	x	x
ADDC	x	x	x
SUBB	x	x	x
MUL	0	x	-
DIV	0	x	-
DA	x	-	-
RRC	x	-	-
RLC	x	-	-
SETB C	1	-	-
CLR C	x	-	-
CPL C	x	-	-
ANL C,bit	x	-	-
ANL C,/bit	x	-	-
ORL C,bit	x	-	-
ORL C,/bit	x	-	-
MOV C,bit	x	-	-
CJNE	x	-	-

"0" = Clear to 0, "1" = Set to 1, "x" = Set to 1/Clear to 0, "-" = Not affected

Table 38: Instructions that Affect Flag Settings

10.5 Interrupts

The CPU has 18 interrupt sources. Each source has its own request flag located in a set of Interrupt Flag SFRs. Each interrupt can be individually enabled or disabled. The definitions of the interrupt sources and the interrupt vectors are given in Table 39.

I^2S and USART1 share interrupts. On the CC1111Fx USB shares interrupt with Port 2 inputs. The interrupt aliases for I^2S and USB are listed in Table 40. However, in the following sections the original interrupt names, masks, and flags listed in Table 39 are the ones used.

The interrupts are grouped into a set of priority level groups with selectable priority levels.

The interrupt enable registers are described in Section 10.5.1 and the interrupt priority settings are described in Section 10.5.3 on Page 68.

10.5.1 Interrupt Masking

Each interrupt can be individually enabled or disabled by the interrupt enable bits in the Interrupt Enable SFRs `IEN0`, `IEN1`, and `IEN2`. The Interrupt Enable SFRs are described below and summarized in Table 39.

Note that some peripherals have several events that can generate the interrupt request associated with that peripheral. This applies to P0, P1, P2, DMA, Timer 1, Timer 2, Timer 3, Timer 4, and Radio. These peripherals have interrupt mask bits for each internal interrupt source in the corresponding SFRs. Note that I^2S has its own interrupt enable bits even if it has only one event per interrupt. For the peripherals that have their own mask bits, one or more of these bits must be set for the associated CPU interrupt flag to be asserted.

In order to use any of the interrupts in the CC1110Fx/CC1111Fx the following steps must be taken:

1. Clear interrupt flags (see Section 10.5.2)
2. Set individual interrupt enable bit in the peripherals SFR, if any
3. Set the corresponding individual, interrupt enable bit in the `IEN0`, `IEN1`, or `IEN2` registers to 1
4. Enable global interrupt by setting the `IEN0.EA` = 1

5. Begin the interrupt service routine at the corresponding vector address of that interrupt. See Table 39 for addresses

Note: An interrupt must not be enabled without having proper code located at the corresponding interrupt vector address

Interrupt Number	Description	Interrupt Name	Interrupt Vector	CPU Interrupt Mask	CPU Interrupt Flag
0	RF TX done / RX ready	RFTXRX	0x03	IEN0.RFTXRXIE	TCON.RFTXRXIF[10]
1	ADC end of conversion	ADC	0x0B	IEN0.ADCIE	TCON.ADCIF[10]
2	USART0 RX complete	URX0	0x13	IEN0.URX0IE	TCON.URX0IF[10]
3	USART1 RX complete (*Note: I^2S RX complete, see Table 40*)	URX1	0x1B	IEN0.URX1IE	TCON.URX1IF[10]
4	AES encryption/decryption complete	ENC	0x23	IEN0.ENCIE	S0CON.ENCIF
5	Sleep Timer compare	ST	0x2B	IEN0.STIE	IRCON.STIF[11]
6	Port 2 inputs (*Note: Also used for USB on **CC1111Fx**, see Table 40*)	P2INT	0x33	IEN2.P2IE	IRCON2.P2IF[11]
7	USART0 TX complete	UTX0	0x3B	IEN2.UTX0IE	IRCON2.UTX0IF
8	DMA transfer complete	DMA	0x43	IEN1.DMAIE	IRCON.DMAIF
9	Timer 1 (16-bit) capture/Compare/overflow	T1	0x4B	IEN1.T1IE	IRCON.T1IF[10,11]
10	Timer 2 (MAC Timer) overflow	T2	0x53	IEN1.T2IE	IRCON.T2IF[10, 11]
11	Timer 3 (8-bit) compare/overflow	T3	0x5B	IEN1.T3IE	IRCON.T3IF[10, 11]
12	Timer 4 (8-bit) compare/overflow	T4	0x63	IEN1.T4IE	IRCON.T4IF[10, 11]
13	Port 0 inputs (*Note: P0_7 interrupt used for USB Resume interrupt on **CC1111Fx***)	P0INT	0x6B	IEN1.P0IE	IRCON.P0IF[11]
14	USART1 TX complete (*Note: I^2S TX complete, see Table 40*)	UTX1	0x73	IEN2.UTX1IE	IRCON2.UTX1IF
15	Port 1 inputs	P1INT	0x7B	IEN2.P1IE	IRCON2.P1IF[11]
16	RF general interrupts	RF	0x83	IEN2.RFIE	S1CON.RFIF[11]
17	Watchdog overflow in timer mode	WDT	0x8B	IEN2.WDTIE	IRCON2.WDTIF

Table 39: Interrupts Overview

[10] Cleared by HW when the CPU vectors to the ISR

[11] Additional interrupt mask bits and/or interrupt flags found in the peripheral's SFRs

Interrupt Number	Description	Interrupt Name	Interrupt Vector	CPU Interrupt Mask Alias	CPU Interrupt Flag Alias
3	I^2S RX complete	URX1/ I2SRX	0x1Bh	IEN0.I2SRXIE	TCON.I2SRXIF[12]
6	USB Interrupt pending (CC1111Fx)	P2INT/ USB	0x33h	IEN2.USBIE	IRCON2.USBIF[13]
13	USB resume interrupt (CC1111Fx). P0_6 and P0_7 does not exist on CC1110Fx. USB resume interrupt configured like P0_7 interrupt on CC1110Fx	P0INT	0x6B	IEN1.P0IE	IRCON.P0IF
14	I^2S TX complete	UTX1/ I2STX	0x73h	IEN2.I2STXIE	IRCON2.I2STXIF[12]

Table 40: Shared Interrupt Vectors (I^2S and USB)

[12] The I^2S module has its own interrupt enable bits and interrupt flags (no masking)

[13] Additional interrupt mask bits and interrupt flags found in the peripheral's SFRs

IEN0 (0xA8) – Interrupt Enable 0 Register

Bit	Field Name	Reset	R/W	Description	
7	EA	0	R/W	Enable All	
				0	No interrupt will be acknowledged
				1	Each interrupt source is individually enabled or disabled by setting its corresponding enable bit
6		0	R/W	Not used	
5	STIE	0	R/W	Sleep Timer interrupt enable	
				0	Interrupt disabled
				1	Interrupt enabled
4	ENCIE	0	R/W	AES encryption/decryption interrupt enable	
				0	Interrupt disabled
				1	Interrupt enabled
3	URX1IE / I2SRXIE	0	R/W	USART1 RX interrupt enable / I2S RX interrupt enable	
				0	Interrupt disabled
				1	Interrupt enabled
2	URX0IE	0	R/W	USART0 RX interrupt enable	
				0	Interrupt disabled
				1	Interrupt enabled
1	ADCIE	0	R/W	ADC interrupt enable	
				0	Interrupt disabled
				1	Interrupt enabled
0	RFTXRXIE	0	R/W	RF TX/RX done interrupt enable	
				0	Interrupt disabled
				1	Interrupt enabled

IEN1 (0xB8) - Interrupt Enable 1 Register

Bit	Field Name	Reset	R/W	Description
7		0	R/W	Not used
6		0	R0	Not used
5	P0IE	0	R/W	Port 0 interrupt enable 0 Interrupt disabled 1 Interrupt enabled
4	T4IE	0	R/W	Timer 4 interrupt enable 0 Interrupt disabled 1 Interrupt enabled
3	T3IE	0	R/W	Timer 3 interrupt enable 0 Interrupt disabled 1 Interrupt enabled
2	T2IE	0	R/W	Timer 2 interrupt enable 0 Interrupt disabled 1 Interrupt enabled
1	T1IE	0	R/W	Timer 1 interrupt enable 0 Interrupt disabled 1 Interrupt enabled
0	DMAIE	0	R/W	DMA transfer interrupt enable 0 Interrupt disabled 1 Interrupt enabled

IEN2 (0x9A) - Interrupt Enable 2 Register

Bit	Field Name	Reset	R/W	Description	
7:6		0	R/W	Not used	
5	WDTIE	0	R/W	Watchdog timer interrupt enable	
				0	Interrupt disabled
				1	Interrupt enabled
4	P1IE	0	R/W	Port 1 interrupt enable	
				0	Interrupt disabled
				1	Interrupt enabled
3	UTX1IE / I2STXIE	0	R/W	USART1 TX interrupt enable / I^2S TX interrupt enable	
				0	Interrupt disabled
				1	Interrupt enabled
2	UTX0IE	0	R/W	USART0 TX interrupt enable	
				0	Interrupt disabled
				1	Interrupt enabled
1	P2IE / USBIE	0	R/W	Port 2 interrupt enable (Also used for USB interrupt enable on CC1111Fx)	
				0	Interrupt disabled
				1	Interrupt enabled
0	RFIE	0	R/W	RF general interrupt enable	
				0	Interrupt disabled
				1	Interrupt enabled

10.5.2 Interrupt Processing

When an interrupt occurs, the CPU will vector to the interrupt vector address shown in Table 39, if this particular interrupt has been enabled. Once an interrupt service has begun, it can be interrupted only by a higher priority interrupt. The interrupt service is terminated by a RETI (return from interrupt) instruction. When a RETI is performed, the CPU will return to the instruction that would have been next when the interrupt occurred.

When the interrupt condition occurs, an interrupt flag bit will be set in one of the CPU interrupt flag registers and in the peripherals interrupt flag register, if this is available. These bits are asserted regardless of whether the interrupt is enabled or disabled. If the interrupt is enabled when an interrupt flag is asserted, then on the next instruction cycle the interrupt will be acknowledged by hardware forcing an LCALL to the appropriate vector address.

Interrupt response will require a varying amount of time depending on the state of the CPU when the interrupt occurs. If the CPU is performing an interrupt service with equal or greater priority, the new interrupt will be pending until it becomes the interrupt with highest priority. In other cases, the response time depends on the current instruction. The fastest possible response to an interrupt is seven instruction cycles. This includes one machine cycle for detecting the interrupt and six cycles to perform the LCALL.

Clearing interrupt flags must be done correctly to ensure that no interrupts are lost or processed more than once. For pulsed or edge shaped interrupt sources one should clear the CPU interrupt flag prior to clearing the module interrupt flag, if available, for flags that are not automatically cleared. For level triggered interrupts (port interrupts) one has to clear the module interrupt flag prior to clearing the CPU interrupt flag. When handling interrupts where the CPU interrupt flag is cleared by hardware, the software should only clear the module interrupt flag. The following interrupts are cleared by hardware:

- RFTXRX
- ADC
- URX0
- URX1/I2SRX
- T1
- T2
- T3
- T4

One or more module flags can be cleared at once. However the safest approach is to only handle one interrupt source each time the interrupt is triggered, hence clearing only one

module flag. When any module flag is cleared the chip will check if there are any module interrupt flags left that are both enabled and asserted, if so the CPU interrupt flag will be asserted and a new interrupt triggered.

The following code example shows how only one module flag is handled and cleared each time the interrupt occurs:

```
#pragma vector = RF_VECTOR
__interrupt void rf_interrupt (void)
{
  S1CON &= ~0x03;          // Clear CPU interrupt flag
  if(RFIF & 0x80)          // TX underflow
  {
    irq_txunf();           // Handle TX underflow
    RFIF &= ~0x80;         // Clear module interrupt flag
  }
  else if(RFIF & 0x40)     // RX overflow
  {
    irq_rxovf();           // Handle RX overflow
    RFIF &= ~0x40;         // Clear module interrupt flag
  }
  // Use "else if" to check and handle other RFIF flags
}
```

TCON (0x88) - CPU Interrupt Flag 1

Bit	Field Name	Reset	R/W	Description
7	URX1IF / I2SRXIF	0	R/W H0	USART1 RX interrupt flag / I^2S RX interrupt flag Set to 1 when USART1 RX interrupt occurs and cleared when CPU vectors to the interrupt service routine. 0 Interrupt not pending 1 Interrupt pending
6		0	R/W	Not used
5	ADCIF	0	R/W H0	ADC interrupt flag. Set to 1 when ADC interrupt occurs and cleared when CPU vectors to the interrupt service routine. 0 Interrupt not pending 1 Interrupt pending
4		0	R/W	Not used
3	URX0IF	0	R/W H0	USART0 RX interrupt flag. Set to 1 when USART0 interrupt occurs and cleared when CPU vectors to the interrupt service routine. 0 Interrupt not pending 1 Interrupt pending
2		1	R/W	Reserved. Must always be set to 1.
1	RFTXRXIF	0	R/W H0	RF TX/RX complete interrupt flag. Set to 1 when RFTXRX interrupt occurs and cleared when CPU vectors to the interrupt service routine. 0 Interrupt not pending 1 Interrupt pending
0		1	R/W	Reserved. Must always be set to 1.

S0CON (0x98) - CPU Interrupt Flag 2

Bit	Field Name	Reset	R/W	Description
7:2		0	R/W	Not used
1	ENCIF_1	0	R/W	AES interrupt. ENCIF has two interrupt flags, ENCIF_1 and ENCIF_0. Interrupt source sets both ENCIF_1 and ENCIF_0, but setting one of these flags in SW will generate an interrupt request. Both flags are set when the AES co-processor requests the interrupt. 0 Interrupt not pending 1 Interrupt pending
0	ENCIF_0	0	R/W	AES interrupt. ENCIF has two interrupt flags, ENCIF_1 and ENCIF_0. Interrupt source sets both ENCIF_1 and ENCIF_0, but setting one of these flags in SW will generate an interrupt request. Both flags are set when the AES co-processor requests the interrupt. 0 Interrupt not pending 1 Interrupt pending

S1CON (0x9B) - CPU Interrupt Flag 3

Bit	Field Name	Reset	R/W	Description
7:6		0	R/W	Not used
1	RFIF_1	0	R/W	RF general interrupt. RFIF has two interrupt flags, RFIF_1 and RFIF_0. Interrupt source sets both RFIF_1 and RFIF_0, but setting one of these flags in SW will generate an interrupt request. Both flags are set when the radio requests the interrupt. 0 Interrupt not pending 1 Interrupt pending
0	RFIF_0	0	R/W	RF general interrupt. RFIF has two interrupt flags, RFIF_1 and RFIF_0. Interrupt source sets both RFIF_1 and RFIF_0, but setting one of these flags in SW will generate an interrupt request. Both flags are set when the radio requests the interrupt. 0 Interrupt not pending 1 Interrupt pending

IRCON (0xC0) - CPU Interrupt Flag 4

Bit	Field Name	Reset	R/W	Description
7	STIF	0	R/W	Sleep Timer interrupt flag 0 Interrupt not pending 1 Interrupt pending
6		0	R/W	Reserved. Must always be set to 0. Failure to do so will lead to ISR toggling (interrupt routine sustained)
5	P0IF	0	R/W	Port 0 interrupt flag 0 Interrupt not pending 1 Interrupt pending
4	T4IF	0	R/W H0	Timer 4 interrupt flag. Set to 1 when Timer 4 interrupt occurs and cleared when CPU vectors to the interrupt service routine. 0 Interrupt not pending 1 Interrupt pending
3	T3IF	0	R/W H0	Timer 3 interrupt flag. Set to 1 when Timer 3 interrupt occurs and cleared when CPU vectors to the interrupt service routine. 0 Interrupt not pending 1 Interrupt pending
2	T2IF	0	R/W H0	Timer 2 interrupt flag. Set to 1 when Timer 2 interrupt occurs and cleared when CPU vectors to the interrupt service routine. 0 Interrupt not pending 1 Interrupt pending
1	T1IF	0	R/W H0	Timer 1 interrupt flag. Set to 1 when Timer 1 interrupt occurs and cleared when CPU vectors to the interrupt service routine. 0 Interrupt not pending 1 Interrupt pending
0	DMAIF	0	R/W	DMA complete interrupt flag. 0 Interrupt not pending 1 Interrupt pending

IRCON2 (0xE8) - CPU Interrupt Flag 5

Bit	Field Name	Reset	R/W	Description
7:5		0	R/W	Not used
4	WDTIF	0	R/W	Watchdog timer interrupt flag
				0 Interrupt not pending
				1 Interrupt pending
3	P1IF	0	R/W	Port 1 interrupt flag.
				0 Interrupt not pending
				1 Interrupt pending
2	UTX1IF / I2STXIF	0	R/W	USART1 TX interrupt flag / I^2S TX interrupt flag
				0 Interrupt not pending
				1 Interrupt pending
1	UTX0IF	0	R/W	USART0 TX interrupt flag
				0 Interrupt not pending
				1 Interrupt pending
0	P2IF / USBIF	0	R/W	Port2 interrupt flag / USB interrupt flag
				0 Interrupt not pending
				1 Interrupt pending

10.5.3 Interrupt Priority

The interrupts are grouped into six interrupt priority groups and the priority for each group is set by the registers IP0 and IP1. The interrupt priority groups with assigned interrupt sources are shown in Table 42. Each group is assigned one of four priority levels, and by default all six interrupt priority groups are assign the lowest priority. In order to assign a higher priority to an interrupt, i.e. to its interrupt group, the corresponding bits in IP0 and IP1 must be set as shown in Table 41 on Page 69.

While an interrupt service request is in progress, it cannot be interrupted by a lower or same level interrupt. In the case when interrupt requests of the same priority level are received simultaneously, the polling sequence shown in Table 43 is used to resolve the priority of each requests.

IP1 (0xB9) - Interrupt Priority 1

Bit	Field Name	Reset	R/W	Description
7:6		0	R/W	Not used
5	IP1_IPG5	0	R/W	Interrupt group 5, priority control bit 1, refer to Table 41
4	IP1_IPG4	0	R/W	Interrupt group 4, priority control bit 1, refer to Table 41
3	IP1_IPG3	0	R/W	Interrupt group 3, priority control bit 1, refer to Table 41
2	IP1_IPG2	0	R/W	Interrupt group 2, priority control bit 1, refer to Table 41
1	IP1_IPG1	0	R/W	Interrupt group 1, priority control bit 1, refer to Table 41
0	IP1_IPG0	0	R/W	Interrupt group 0, priority control bit 1, refer to Table 41

IP0 (0xA9) - Interrupt Priority 0

Bit	Field Name	Reset	R/W	Description
7:6		0	R/W	Not used
5	IP0_IPG5	0	R/W	Interrupt group 5, priority control bit 0, refer to Table 41
4	IP0_IPG4	0	R/W	Interrupt group 4, priority control bit 0, refer to Table 41
3	IP0_IPG3	0	R/W	Interrupt group 3, priority control bit 0, refer to Table 41
2	IP0_IPG2	0	R/W	Interrupt group 2, priority control bit 0, refer to Table 41
1	IP0_IPG1	0	R/W	Interrupt group 1, priority control bit 0, refer to Table 41
0	IP0_IPG0	0	R/W	Interrupt group 0, priority control bit 0, refer to Table 41

IP1_x	IP0_x	Priority Level
0	0	0 (lowest)
0	1	1
1	0	2
1	1	3 (highest)

Table 41: Priority Level Setting

Group	Interrupts		
IPG0	RFTXRX	RF	DMA
IPG1	ADC	T1	P2INT / USB
IPG2	URX0	T2	UTX0
IPG3	URX1 / I2SRX	T3	UTX1 / I2STX
IPG4	ENC	T4	P1INT
IPG5	ST	P0INT (USB Resume)	WDT

Table 42: Interrupt Priority Groups

Interrupt Number	Interrupt Name	
0	RFTXRX	Polling sequence ↓
16	RF	
8	DMA	
1	ADC	
9	T1	
2	URX0	
10	T2	
3	URX1 / I2SRX	
11	T3	
4	ENC	
12	T4	
5	ST	
13	P0INT / (USB Resume)	
6	P2INT / USB	
7	UTX0	
14	URX1 / I2STX	
15	P1INT	
17	WDT	

Table 43: Interrupt Polling Sequence

11 Debug Interface

The ***CC1110Fx/CC1111Fx*** includes an on-chip debug module which communicates over a two-wire interface. The debug interface allows programming of the on-chip flash. It also provides access to memory and registers contents, and debug features such as breakpoints, single-stepping, and register modification.

The debug interface uses the I/O pins P2_1 as Debug Data and P2_2 as Debug Clock during Debug mode. These I/O pins can be used as general purpose I/O only while the device is not in Debug mode. Thus the debug interface does not interfere with any peripheral I/O pins.

11.1 Debug Mode

Debug mode is entered by forcing two rising edge transitions on pin P2_2 (Debug Clock) while the RESET_N input is held low.

While in Debug mode pin P2_1 is the Debug

Data bi-directional pin and P2_2 is the Debug Clock input pin.

Note: Debugging of PM2 and PM3 is not supported. Also note that `CLKCON.CLKSPD` must be 000 or 001 when using the debug interface

11.2 Debug Communication

The debug interface uses an SPI-like two-wire interface consisting of the P2_1 (Debug Data) and P2_2 (Debug Clock) pins. Data is driven on the bi-directional Debug Data pin at the positive edge of Debug Clock and data is sampled on the negative edge of this clock.

Debug commands are sent by an external host and consist of 1 to 4 output bytes (including command byte) from the host and an optional input byte read by the host. Command and data is transferred with MSB first. Figure 17 shows a timing diagram of data on the debug interface.

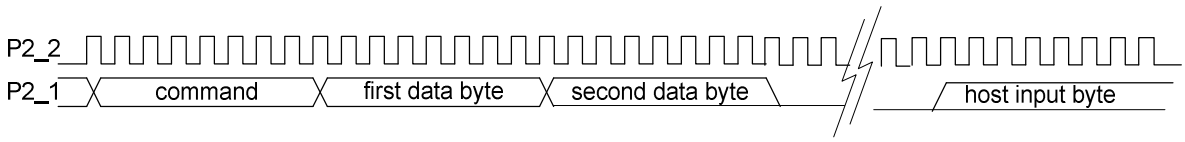

Figure 17: Debug Interface Timing Diagram

11.3 Debug Lock Bit

For software and/or access protection, a set of lock bits can be written. This information is contained in the Flash Information Page (see Section 10.2.3.2), at location 0x000. The Flash Information Page can only be accessed through the debug interface. There are three kinds of lock protect bits as described in this section.

The lock size bits `LSIZE[2:0]` are used to define which section of the flash memory should be write protected, if any. The size of the write protected area can be set to 0 (no pages), 1, 2, 4, 8, 16, 24, or 32 KB (all pages), starting from top of flash memory and defining a section below this. Note that for ***CC1110F8***, ***CC1111F8***, ***CC1110F16***, and ***CC1111F16***, the only supported value for `LSIZE[2:0]`is 0 and 7 (all or no pages respectively).

The second type of lock protect bits is `BBLOCK`, which is used to lock the boot sector page (page 0 ranging from address 0x0000 to 0x03FF). When `BBLOCK` is set to 0, the boot sector page is locked.

The third type of lock protect bit is `DBGLOCK`, which is used to disable hardware debug support through the Debug Interface. When `DBGLOCK` is set to 0, almost all debug commands are disabled.

When the Debug Lock bit, `DBGLOCK`, is set to 0 (see Table 44) all debug commands except CHIP_ERASE, READ_STATUS and GET_CHIP_ID are disabled and will not function. The status of the Debug Lock bit can be read using the READ_STATUS command (see Section 11.4.2).

Note that after the Debug Lock bit has changed due to a Flash Information Page write or a flash mass erase, a HALT, RESUME, DEBUG_INSTR, STEP_INSTR, or STEP_REPLACE command must be executed so that the Debug Lock value returned by READ_STATUS shows the updated Debug Lock value. For example a dummy NOP DEBUG_INSTR command could be executed. The Debug Lock bit will also be updated after a device reset so an alternative is to reset the chip and reenter debug mode.

The CHIP_ERASE command will set all bits in flash memory to 1. This means that after issuing a CHIP_ERASE command the boot sector will be writable, no pages will be write-protected, and all debug commands are enabled.

The lock protect bits are written as a normal flash write to `FWDATA` (see Section 12.3.2), but the Debug Interface needs to select the Flash Information Page first instead of the Flash Main Page which is the default setting. The Information Page is selected through the Debug Configuration which is written through the Debug Interface only. Refer to Section 11.4.1 and Table 46 for details on how the Flash Information Page is selected using the Debug Interface.

Table 44 defines the byte containing the flash lock protection bits. Note that this is not an SFR, but instead the byte stored at location 0x000 in Flash Information Page.

Bit	Field Name	Description		
7:5		Reserved, write as 0		
4	BBLOCK	Boot Block Lock		
		0	Page 0 is write protected	
		1	Page 0 is writeable, unless LSIZE is 000	
3:1	LSIZE[2:0]	Lock Size. Sets the size of the upper flash area which is write-protected. Byte sizes are listed below		
		000	32 KB (all pages)	
		001	24 KB	CC1110F32 and CC1111F32 only
		010	16 KB	CC1110F32 and CC1111F32 only
		011	8 KB	CC1110F32 and CC1111F32 only
		100	4 KB	CC1110F32 and CC1111F32 only
		101	2 KB	CC1110F32 and CC1111F32 only
		110	1 KB	CC1110F32 and CC1111F32 only
		111	0 bytes (no pages)	
0	DBGLOCK	Debug lock bit		
		0	Disable debug commands	
		1	Enable debug commands	

Table 44: Flash Lock Protection Bits Definition

11.4 Debug Commands

The debug commands are shown in Table 45. Some of the debug commands are described in further detail in the following sections

11.4.1 Debug Configuration

The commands WR_CONFIG and RD_CONFIG are used to access the debug configuration data byte. The format and description of this configuration data is shown in Table 46

11.4.2 Debug Status

A debug status byte is read using the READ_STATUS command. The format and description of this debug status is shown in Table 47.

The READ_STATUS command is used e.g. for polling the status of flash chip erase after a CHIP_ERASE command or oscillator stable status required for debug commands HALT, RESUME, DEBUG_INSTR, STEP_REPLACE, and STEP_INSTR.

11.4.3 Hardware Breakpoints

The debug command SET_HW_BRKPNT is used to set a hardware breakpoint. The CC1110Fx/CC1111Fx supports up to four hardware breakpoints. When a hardware breakpoint is enabled it will compare the CPU address bus with the breakpoint. When a match occurs, the CPU is halted.

When issuing the SET_HW_BRKPNT debug command, the external host must supply three data bytes that define the hardware breakpoint. The hardware breakpoint itself consists of 18 bits while three bits are used for control purposes. The format of the three data bytes for the SET_HW_BRKPNT command is as follows.

The first data byte consists of the following:

Bit	Description	
7:5	Unused	
4:3	Breakpoint number; 0 - 3	
2	Breakpoint enable	
	0	Disable
	1	Enable
1:0	Reserved. Must be 00.	

The second data byte consists of bits 15 - 8 of the hardware breakpoint while the third data byte consists of bits 7 - 0 of the hardware

breakpoint. This means that the second and third data byte sets the CPU CODE address where the CPU is halted.

11.4.4 Flash Programming

Programming of the on-chip flash is performed via the debug interface. The external host must initially send instructions using the DEBUG_INSTR debug command to perform the flash programming with the Flash Controller as described in Section 12.3.

Command	Instruction Code	Description
CHIP_ERASE	0001 0100	Perform flash chip erase (mass erase). The debug interface will be enabled and no parts of flash will be write-protected after issuing this command. Do not use any other commands than READ_STATUS until mass erase has completed. Return 1 status byte to host
WR_CONFIG	0001 1101	Write configuration data. Return 1 status byte to host. Refer to Table 46 for details.
RD_CONFIG	0010 0100	Read configuration data. Return value set by WR_CONFIG command
GET_PC	0010 1000	Return value of 16-bit program counter
READ_STATUS	0011 0100	Read status byte. Refer to Table 47
SET_HW_BRKPNT	0011 1011	Set hardware breakpoint
HALT	0100 0100	Halt CPU operation. Return 1 status byte to host
RESUME	0100 1100	Resume CPU operation. To run this command, the CPU must have been halted. Return 1 status byte to host
DEBUG_INSTR	0101 01yy	Run debug instruction. The supplied instruction will be executed by the CPU without incrementing the program counter. To run this command, the CPU must have been halted. Return 1 status byte to host. yy: Number of bytes in the CPU instruction (see Table 37). Valid values are 01, 10, and 11
STEP_INSTR	0101 1100	Step CPU instruction. The CPU will execute the next instruction from program memory and increment the program counter after execution. To run this command, the CPU must have been halted. Return 1 status byte to host
STEP_REPLACE	0110 01 yy	Step and replace CPU instruction. The supplied instruction will be executed by the CPU instead of the next instruction in program memory. The program counter will be incremented after execution. To run this command, the CPU must have been halted. Return 1 status byte to host. yy: Number of bytes in the CPU instruction (see Table 37). Valid values are 01, 10, and 11
GET_CHIP_ID	0110 1000	Return value of 16-bit chip ID (`PARTNUM:VERSION`).

Table 45: Debug Commands

Bit	Field Name	Description	
7:4		Not used. Must be set to 0000	
3	TIMERS_OFF	Disable timer operation (Timer 1/2/3/4). This overrides the `TIMER_SUSPEND` bit and its function.	
		0	Do not disable timers
		1	Disable timers
2	DMA_PAUSE	DMA pause	
		0	Enable DMA transfers
		1	Pause all DMA transfers
1	TIMER_SUSPEND	Suspend timers (Timer 1/2/3/4). Timer operation is suspended for debug instructions and if a step instruction is a branch. If not suspended, these instructions would result an extra timer count during the clock cycle in which the branch is executed	
		0	Do not suspend timers
		1	Suspend timers
0	SEL_FLASH_INFO_PAGE	Select Flash Information Page in order to write flash lock bits (1 KB lowest part of flash)	
		0	Select flash Main Page
		1	Select Flash Information Page

Table 46: Debug Configuration

Bit	Field Name	Description	
7	CHIP_ERASE_DONE	Flash chip erase done	
		0	Chip erase in progress
		1	Chip erase done
6	PCON_IDLE	PCON idle	
		0	CPU is running
		1	CPU is idle (clock gated)
5	CPU_HALTED	CPU halted	
		0	CPU running
		1	CPU halted
4	POWER_MODE_0	Power Mode 0	
		0	Power Mode 1 - 3 selected
		1	Power Mode 0 selected (active mode if the CPU is running)
3	HALT_STATUS	Halt status. Returns cause of last CPU halt	
		0	CPU was halted by HALT debug command
		1	CPU was halted by software or hardware breakpoint
2	DEBUG_LOCKED	Debug locked. Returns value of `DBGLOCK` bit	
		0	Debug interface is not locked
		1	Debug interface is locked
1	OSCILLATOR_STABLE	Oscillators stable. This bit represents the status of the `SLEEP.XSOC_STB` and `SLEEP.HFRC_STB` register bits.	
		0	Oscillators not stable
		1	Oscillators stable
0	STACK_OVERFLOW	Stack overflow. This bit indicates when the CPU writes to DATA memory space at address 0xFF, which is possibly a stack overflow	
		0	No stack overflow
		1	Stack overflow

Table 47: Debug Status

12 Peripherals

In the following sub-sections, each CC1110Fx/CC1111Fx peripheral is described in detail.

12.1 Power Management and Clocks

This section describes the Power Management Controller. The Power Management Controller controls the use of active mode, power modes, and clock control.

12.1.1 Power Management Introduction

The CC1110Fx/CC1111Fx uses different operating modes to allow low-power operation. Ultra-low-power operation is obtained by turning off power supply to modules to avoid static (leakage) power consumption and also by using clock gating and turning off oscillators to reduce dynamic power consumption.

The CC1110Fx/CC1111Fx has one active mode and four power modes, called PM0, PM1, PM2 and PM3, where PM3 has the lowest power consumption. Please note the minimum requirement on high speed crystal oscillator power down time in all modes of operation for CC1110Fx, see Table 11. The different operating modes are shown in Table 48.

Operating Mode	High-speed Oscillator		Low-speed Oscillator		Digital Voltage Regulator	CPU
Configuration	A	None	A	None		
	B	High speed XOSC	B	Low power RCOSC		
	C	HS RCOSC	C	32.768 kHz XOSC		
Active	B and / or C		B or C		On	Running
PM0	B and / or C		B or C		On	Idle
PM1	A		B or C		On	Idle
PM2	A		B or C		Off	Idle
PM3	A		A		Off	Idle

Table 48: Operating Modes

Active mode: The full functional mode. The voltage regulator to the digital core is on and either the high speed RC oscillator or the high speed crystal oscillator or both are running. Either the Low power RC oscillator or the 32.768 kHz crystal oscillator is running.

PM0: Same as active mode, but the CPU is idle, meaning that no code is being executed.

PM1: The voltage regulator to the digital part is on. Neither the high speed crystal oscillator nor the high speed RC oscillator is running. Either the low power RC oscillator or the 32.768 kHz crystal oscillator is running. The system will go to active mode on reset or an external interrupt or when the Sleep Timer expires.

PM2: The voltage regulator to the digital core is turned off. Neither the high speed crystal oscillator nor the high speed RC oscillator is running. Either the low power RC oscillator or the 32.768 kHz crystal oscillator is running. The system will go to active mode on reset or an external interrupt or when the Sleep Timer expires. The CC1111Fx will lose all USB state information when PM2 is entered. *Thus, PM2 should not be used with USB.*

PM3: The voltage regulator to the digital core is turned off. None of the oscillators are running. The system will go to active mode on reset or an external interrupt. The CC1111Fx will lose all USB state information when PM3 is entered. *Thus, PM3 should not be used with USB*.

When an external interrupt occurs in PM1, PM2, or PM3, or a Sleep Timer interrupt occur in PM1 and PM2, active mode will be entered and the code will start executing from where it entered PM1/2/(3). Any enabled interrupt will take the device from PM0 to active mode, and also in this case the code will start executing from where it entered PM0. A reset, however, will take the chip from any of the four power modes to active mode, but the code will start executing from the start of the program.

12.1.2 Active Mode and Power Modes

The different operating modes are described in detail in the five following sections.

12.1.2.1 Active Mode

This is the full functional mode of operation where the CPU, peripherals, and RF transceiver are active. The voltage regulator to the digital core is on and either the high speed RC oscillator or the high speed crystal oscillator or both are running together with either the Low power RC oscillator or the 32.768 kHz crystal oscillator.

12.1.2.2 PM0

If the `PCON.IDLE` bit is set to 1 while in active mode, the CPU will be idle (clock gated) until any interrupt occur. All other peripherals will function as normal while the CPU is halted.

12.1.2.3 PM1

In PM1, the high speed oscillators (high speed XOSC and HS RCOSC) are powered down thereby halting the CPU and peripherals. The digital voltage regulator, the power-on reset, external interrupts, the low power RC oscillator or the 32.768 kHz crystal oscillator and Sleep Timer peripherals are active. I/O pins retain the I/O mode and output value set before entering PM1. When PM1 is entered, a power down sequence is run.

PM1 is used when the expected time until a wakeup event is relatively short since PM1 uses a fast power down/up sequence.

12.1.2.4 PM2

PM2 has the second lowest power consumption. In PM2, the power-on reset, external interrupts, the low power RC oscillator or the 32.768 kHz crystal oscillator and Sleep Timer peripherals are active. I/O pins retain the I/O mode and output value set before entering PM2. The content of RAM and most registers is preserved in this mode (see Table 31, Table 32, and Table 33). All other internal circuits are powered down. When PM2 is entered, a power down sequence is run.

PM2 is typically entered when using the Sleep Timer as the wakeup event. Please see Section 12.8.1 for minimum sleep time when using the Sleep Timer.

12.1.2.5 PM3

In PM3 the internal voltage regulator and all oscillators are turned off.

This power mode is used to achieve the operating mode with the lowest power consumption. In PM3 all internal circuits that are powered from internal voltage regulators are turned off.

Reset (POR, or external) and external I/O port interrupts are the only functions that are operating in this mode. I/O pins retain the I/O mode and output value set before entering PM3. A reset or external interrupt condition will wake the device and make it enter active mode. The content of RAM and registers is preserved in this mode. PM3 uses the same power down/up sequence as PM2.

PM3 is used to achieve ultra low power consumption when waiting for an external event.

When entering active mode from PM1, PM2, or PM3, the high-speed oscillators, which where running when entering PM{1 - 3}, are started. If the high speed crystal oscillator is selected as source for the system clock (`CLKCON.OSC=0`), the system clock will use the HS RCOSC as clock source until the high speed crystal oscillator is stable (`SLEEP.XOSC_STB=1`).

12.1.3 Power Management Control

The required power mode is selected by the `SLEEP.MODE` setting. Setting the `IDLE` bit in the `PCON` SFR after setting the `MODE` bits, makes the **CC1111Fx/CC1111Fx** enter the selected power mode. The following procedure must be followed to be able to safely put the device into one of the power modes PM{1 - 3}:

```
// Pseudo Code
SLEEP.MODE = PM{1-3}
NOP();
NOP();
NOP();
If (SLEEP_MODE != 0)
    PCON.IDLE = 1;
```

An interrupt from port pins or Sleep Timer (not PM3), or a power-on reset will wake the device and bring it into active mode by resetting the `MODE` bits and clear the `IDLE` bit. Since an interrupt can occur before the device has actually entered PM{1 - 3}, it is necessary to clear the `MODE` bits before returning from all ISRs associated with interrupts that can be

used to wake the device from PM{1 - 3}. It should be noted that all port interrupts and Sleep Timer interrupt are blocked when SLEEP.MODE is different from 00, thus the time between setting SLEEP.MODE≠00 and asserting PCON.IDLE should be as short as possible. The SLEEP.MODE will be cleared to 00 by HW when power mode is entered, thus interrupts are enabled during power modes. All interrupts not to be used to wake up from power modes must be disabled before setting SLEEP.MODE≠00.

It should be noted that after enabling the HS XOSC (CLKCON.OSC=0) one has to ensure that the HS XOSC is stable (SLEEP.XOSC_STB=1) before entering PM{1 - 3}.

If the low power RCOSC is enabled (CLKCON.OSC32K=1) and the HS XOSC is selected as clock source for the system clock, the time between succeeding PM{1 - 3} modes (i.e. the time in active mode) must be larger than the startup time for the HS XOSC (see Table 11 and Table 12) plus the initial calibration time for the low power RCOSC (Table 14).

12.1.4 Power Management Registers

This section describes the Power Management registers. All register bits retain their previous values when entering PM2 or PM3 unless otherwise stated.

PCON (0x87) - Power Mode Control

Bit	Field Name	Reset	R/W	Description
7:2		0	R/W	Not used
1		0	R0/W1	Reserved. Must not be written to 1. Doing so will stop CPU from operating.
0	IDLE	0	R0/W1 H0	Power mode control. Writing a 1 to this bit forces CC1110Fx/CC1111Fx to enter the power mode set by SLEEP.MODE. This bit is always read as 0. All interrupt requests will clear this bit and CC1110Fx/CC1111Fx will reenter active mode. *Note: see Section 12.1.3 for details on how this bit should be used.*

SLEEP (0xBE) - Sleep Mode Control

Bit	Field Name	Reset	R/W	Description	
7	USB_EN	0	R/W	USB Enable (CC1111Fx). This bit is unused for CC1110Fx	
				0	Disable (Setting this bit to 0 will reset the USB controller)
				1	Enable
				This bit will be 0 when returning from PM2 and PM3	
6	XOSC_STB	0	R	High speed crystal oscillator (f_{XOSC}) stable status	
				0	Oscillator is not powered up or not yet stable
				1	Oscillator is powered up and stable
5	HFRC_STB	0	R	High speed RC oscillator (HS RCOSC) stable status	
				0	Oscillator is not powered up or not yet stable
				1	Oscillator is powered up and stable
4:3	RST[1:0]	XX	R	Status bit indicating the cause of the last reset. If there are multiple resets, the register will only contain the last event.	
				00	Power-on reset or Brown-out reset
				01	External reset
				10	Watchdog timer reset
2	OSC_PD	1	R/W H0	High speed XOSC and HS RCOSC power down setting. The bit is cleared if the `CLKCON.OSC` bit is toggled. If there is a calibration in progress (of the low power RC oscillator and/or the HS RC oscillator) and one attempts to set this bit, the oscillator not selected by the `CLKCON.OSC` bit will be powered down, and the bit will be set, at the end of calibration.	
				0	Both oscillators powered up
				1	Oscillator not selected by `CLKCON.OSC` bit powered down
1:0	MODE[1:0]	00	R/W	Power mode setting	
				00	PM0
				01	PM1
				10	PM2
				11	PM3
				These bits will be set to 00 when entering PM{1 - 3} *Note: It is necessary to clear the `MODE` bits before returning from all ISRs associated with interrupts that can be used to wake the device from PM{1 - 3}. See Section 12.1.3 for details*	

12.1.5 Oscillators and Clocks

The CC1110Fx/CC1111Fx has one internal system clock. The source for the system clock can be either a high speed RC oscillator or a high speed crystal oscillator. The crystal oscillator for CC1110Fx operates at 26 - 27 MHz while the crystal oscillator for CC1111Fx operates at 48 MHz. The 26 - 27 MHz clock is used directly as the system clock for CC1110Fx. On CC1111Fx, the 48 MHz clock is used by the USB Controller only while a derived 24 MHz clock is used as the system clock. The source for the system clock is selected by the `CLKCON.OSC` bit.

There is also one 32 kHz clock source that can either be a low power RCOSC or a 32.768 kHz crystal oscillator. This is controlled by the `CLKCON.OSC32K` bit.

The choice of oscillator allows a trade-off between high-accuracy in the case of the crystal oscillator and low power consumption when the RC oscillator is used. Note that operation of the RF transceiver requires that the high speed crystal oscillator is used.

> *Note: The high speed crystal oscillator must be stable (`SLEEP.XOSC_STB=1`) before using the radio.*

12.1.5.1 High Speed Oscillators

Two high speed oscillators are present in the device:

- High speed crystal oscillator (26 - 27 MHz for **CC1110Fx** and 48 MHz for **CC1111Fx**)
- High speed RC oscillator (13 - 13.5 MHz for **CC1110Fx** and 12 MHz for **CC1111Fx**)

The high speed crystal oscillator startup time may be too long for some applications, and the device can therefore run on the high speed RCOSC until the crystal oscillator is stable. The HS RCOSC consumes less power than the crystal oscillator, but since it is not as accurate as the crystal oscillator it can not be used for RF transceiver operation.

The `CLKCON.OSC` bit selects the source of the system clock (high speed crystal oscillator, HS XOSC, or high speed RC oscillator, HS RCOSC). The system clock will not change clock source before the selected clock source is stable (indicated by `SLEEP.XOSC_STB` and `SLEEP.HFRC_STB`). It should be noted that once the clock source change has been initiated the clock source should not be changed or updated again until the clock source change has taken place.

> *Note: When changing system clock source from HS XOSC to HS RCOSC, there might be a delay from the assertion of `SLEEP.HFRC_STB` until the actual change of the system clock source (assertion of `CLKCON.OSC`). This delay is present if the HS RCOSC and/or low power RCOSC is being calibrated when the system clock source change is being initiated.*

The oscillator not selected as the system clock source, will be set in power-down mode by setting `SLEEP.OSC_PD` to 1 (the default state). `SLEEP.OSC_PD` should not be set to 1 before the oscillator selected as the system clock source is reported stable (`SLEEP.HFRC_STB=1` or `SLEEP.XOSC_STB=1`). Please note the minimum requirement on high speed crystal oscillator power down guard time in all modes of operation for **CC1110Fx**, see Table 11. The HS RCOSC may be turned off when the high speed crystal oscillator has been selected as system clock source and vice versa.

When `SLEEP.OSC_PD` is 0, both oscillators are powered up and running. Be aware that `SLEEP.OSC_PD` is cleared if the `CLKCON.OSC` bit is toggled.

A calibration of the HS RCOSC will be initiated by selecting the HS XOSC as system clock source (`CLKCON.OSC` is set to 0). The calibration will only be performed once. It is not possible to enter PM{1 - 3}, change system clock source back to HS RCOSC, or power down the HS RCOSC before the calibration is completed. Note that even if the calibration of the HS RCOSC is completed, a calibration of the low power RC oscillator might still be in progress and changing system clock source back to HS RCOSC will not be possible before also this calibration has completed.

If `SLEEP.OSC_PD=0`, the HS RCOSC will run on the calibrated value once the calibration is completed (see Table 15 for initial calibration time). If `SLEEP.OSC_PD=1`, the HS RCOSC will be turned off after calibration, but the calibration value will be stored and used when the HS RCOSC is started again. In order to calibrate the HS RCOSC regularly (if so found necessary based on the drift parameters listed in Table 15) one should switch between using the HS RCOSC and the high speed crystal oscillator as system clock source.

If `CLKCON.OSC` is set to 0 when entering PM{1 - 3}, the HS RCOSC will be calibrated once when returning to active mode. (the calibration will start once the HS XOSC is stable and act as the clock source for the system clock).

> *Note: HS RCOSC calibration value gets reset to its default value upon waking up from PM{2 - 3}, meaning that any previous calibration result is lost.*

12.1.5.2 System Clock Speed and Radio

Operation of the RF transceiver requires that the high speed crystal oscillator is used. The `CLKCON.CLKSPD` setting will limit the maximum data rate, as shown in Table 49. Note that when using FEC (`MDMCFG1.FEC_EN=1`) `CLKCON.CLKSPD` must be set to 000.

CLKCON.CLKSPD	Maximum Data Rate [kBaud]		
	MSK	GFSK, OOK and ASK	2-FSK
000	500	250	500
001	500	250	500
010	500	250	500
011	500	250	500
100	400	250	400
101	200	200	200
110	100	100	100
111	50	50	50

Table 49: System Clock Speed vs. Data Rate

12.1.5.3 Low Speed Oscillators (32 kHz clock source)

Two low speed oscillators are present in the device:

- Low speed crystal oscillator (32.768 kHz)
- Low power RC oscillator (34.667 - 36 kHz for ***CC1110Fx*** and 32 kHz for ***CC1111Fx***)

The low speed crystal oscillator is designed to operate at 32.768 kHz and provide a stable clock signal for systems requiring time accuracy. The low power RC oscillator run at f_{XOSC} / *750* for ***CC1110Fx*** and f_{XOSC} / 1500 for ***CC1111Fx***, when calibrated. The calibration can only take place when the low power RC oscillator is running and the high speed crystal oscillator is enabled and stable, and is initiated by selecting the HS XOSC as the clock source for the system clock (`CLKCON.OSC=0`). The low power RC oscillator should be used to reduce cost and power consumption compared to the 32.768 kHz crystal oscillator solution. The two low speed oscillators can not be operated simultaneously.

By default, after a reset, the low power RC oscillator is enabled and selected as the 32 kHz clock source. The RC oscillator consumes less power, but is less accurate than the 32.768 kHz crystal oscillator. Refer to Section 6.5 and 6.6 for characteristics of these oscillators.

The `CLKCON.OSC32K` bit selects the source of the 32 kHz clock. This bit must only be changed while using the HS RCOSC as the system clock source. If `CLKCON.OSC32K=1`, changing the system clock source to the HS XOSC will initiate the calibration of the low power RC oscillator. The calibration of the low power RC oscillator is continuously performed as long as `CLKCON.OSC=0` and the device is in active mode or PM0. The result of the calibration is a RC clock running at 34.667 - 36 kHz for ***CC1110Fx*** and 32 kHz for ***CC1111Fx***.

The low power RCOSC calibration takes approximately 2 ms. Except for the initial calibration (first calibration after the HS XOSC was set as source for the system clock (`CLKCON.OSC=0`)), a calibration will be aborted if one of the following actions is initiated by SW:

a) Switching the clock source for the system clock from HS XOSC to HS RCOSC by setting `CLKCON.OSC=1`

b) Entering PM{1 - 3}.

If a) or b) is initiated during the initial calibration, the calibration will complete before a) or b) will take place (i.e., the HS XOSC will continue as the clock source for the system clock for up to 2 ms before the switching takes place or PM{1 - 3} is entered). If a) or b) is initiated after the initial calibration has completed, there will be a delay of typically 130 µs from SW initiates a) or b), until the calibration is being aborted and the system clock source is changed or PM{1 - 3} is entered (see Figure 18).

> *Note: During the initial calibration a) or b) can only be initiated once.*
> *After the initial calibration has completed and a) or b) is initiated, one must not try to initiate a) or b) again within the next 130 µs.*

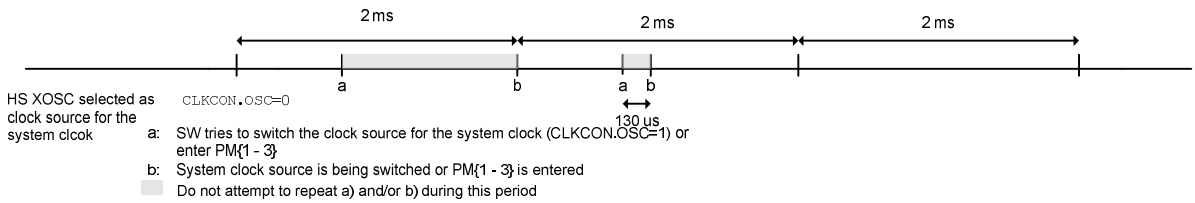

Figure 18: Low Power RCOSC Calibration

CLKCON (0xC6) - Clock Control

Bit	Field Name	Reset	R/W	Description
7	OSC32K	1	R/W	32 kHz clock oscillator select. The HS RCOSC must be clock source for the system clock (`CLKCON.OSC=1`) when this bit is to be changed.
				0 — 32.768 kHz crystal oscillator
				1 — Low power RC oscillator (32 - 36 kHz for **CC1110Fx** and 32 kHz for **CC1111Fx**)
				Note: This bit is not retained in PM2 and PM3. After re-entry to active mode from one of these power modes this bit will be at the reset value 1.
6	OSC	1	R/W	System clock oscillator select.
				0 — High speed crystal oscillator
				1 — High speed RC oscillator
				If the selected oscillator is not already powered up when this bit is set/cleared, it will be powered up by selecting it. This setting will only take effect when the selected oscillator is powered up and stable and when the calibration of the HS RCOSC and initial calibration of the low power RC oscillator is completed. *Note: It is not possible to change from high speed RC oscillator to high speed crystal oscillator when `SLEEP.MODE≠00`.*
5:3	TICKSPD[2:0]	001	R/W	Timer tick speed setting. The value of `TICKSPD` cannot be higher than `CLKSPD`.

	`CLKCON.OSC=0` HS XOSC used as clock source for system clock		`CLKCON.OSC=1` Calibrated HS RCOSC used as clock source for system clock	
000	f_{Ref}	26 MHz	NA	NA
001	f_{Ref} /2	13 MHz	f_{Ref} /2	13 MHz
010	f_{Ref} /4	6.5 MHz	f_{Ref} /4	6.5 MHz
011	f_{Ref} /8	3.25 MHz	f_{Ref} /8	3.25 MHz
100	f_{Ref} /16	1.625 MHz	f_{Ref} /16	1.625 MHz
101	f_{Ref} /32	812.5 kHz	f_{Ref} /32	812.5 kHz
110	f_{Ref} /64	406.25 kHz	f_{Ref} /64	406.25 kHz
111	f_{Ref} /128	203.125 kHz	f_{Ref} /128	203.125 kHz

$f_{Ref} = f_{xosc}$ for **CC1110Fx** and $f_{Ref} = f_{xosc}/2$ for **CC1111Fx**
Numbers above is for **CC1110Fx** with f_{xosc} = 26 MHz

2:0	CLKSPD[2:0]	001	R/W	System clock speed setting. When a new `CLKSPD` value is written, the new setting is read when the clock has changed.

	`CLKCON.OSC=0` HS XOSC used as clock source for system clock		`CLKCON.OSC=1` Calibrated HS RCOSC used as clock source for system clock	
000	f_{Ref}	26 MHz	NA	NA
001	f_{Ref} /2	13 MHz	f_{Ref} /2	13 MHz
010	f_{Ref} /4	6.5 MHz	f_{Ref} /4	6.5 MHz
011	f_{Ref} /8	3.25 MHz	f_{Ref} /8	3.25 MHz
100	f_{Ref} /16	1.625 MHz	f_{Ref} /16	1.625 MHz
101	f_{Ref} /32	812.5 kHz	f_{Ref} /32	812.5 kHz
110	f_{Ref} /64	406.25 kHz	f_{Ref} /64	406.25 kHz
111	f_{Ref} /128	203.125 kHz	f_{Ref} /128	203.125 kHz

$f_{Ref} = f_{xosc}$ for **CC1110Fx** and $f_{Ref} = f_{xosc}/2$ for **CC1111Fx**
Numbers above is for **CC1110Fx** with f_{xosc} = 26 MHz

12.1.6 Timer Tick Generation

The power management controller generates a tick or enable signal for the peripheral timers, thus acting as a prescaler for the timers. This is a global clock division for Timer 1, Timer 2, Timer 3, and Timer 4. The tick speed is programmed from 0.203 to 26 MHz for **CC1110Fx** assuming a 26 MHz crystal or from 0.1875 to 24 MHz for **CC1111Fx** by setting the `CLKCON.TICKSPD` register appropriately.

> *Note: `CLKCON.TICKSPD` cannot be set higher than `CLKCON.CLKSPD`.*

12.1.7 Data Retention

In PM2 and PM3, power is removed from most of the internal circuitry. However, parts of SRAM will retain its contents. The content of internal registers is also retained in PM2 and PM3, with some exceptions (see Table 31, Table 32, and Table 33).

The XDATA memory locations 0xF000 - 0xFFFF (4096 bytes) retain data in PM2 and PM3. Please note the following exception:

The XDATA memory locations 0xFDA2 - 0xFEFF (350 bytes) will lose all data when PM2 or PM3 is entered. These locations will contain undefined data when active mode is re-entered.

The registers which retain their contents are the CPU registers, peripheral registers and RF registers, unless otherwise specified for a given register bit field. Switching to power modes PM2 and PM3 appears transparent to software with the following exception:

- Watchdog timer 15-bit counter is reset to 0x0000 when entering PM2 or PM3
- HS RCOSC calibration value gets reset to its default value upon waking up from PM2 and PM3.

12.1.8 I/O and Radio

I/O port pins P1_0 and P1_1 do not have internal pull-up/pull-down resistors. These pins should therefore be set as outputs or pulled high/low externally to avoid leakage current.

To save power, the radio should be turned off when it is not used.

12.2 Reset

The **CC1110Fx/CC1111Fx** has four reset sources. The following events generate a reset:

- Forcing RESET_N input pin low
- A power-on reset condition
- A brown-out reset condition
- Watchdog timer reset condition

The initial conditions after a reset are as follows:

- I/O pins are configured as inputs with pull-up, except P1_0 and P1_1.
- CPU program counter is loaded with 0x0000 and program execution starts at this address
- All peripheral registers are initialized to their reset values (refer to register descriptions)
- Watchdog timer is disabled

12.2.1 Power On Reset and Brown Out Detector

The **CC1110Fx/CC1111Fx** includes a Power On Reset (POR) providing correct initialization during device power-on. Also included is a Brown Out Detector (BOD) operating on the regulated 1.8 V digital power supply only, The BOD will protect the memory contents during supply voltage variations which cause the regulated 1.8 V power to drop below the minimum level required by flash memory and SRAM.

When power is initially applied to the **CC1110Fx/CC1111Fx** the Power On Reset (POR) and Brown Out Detector (BOD) will hold the device in reset state until the supply voltage reaches above the Power On Reset and Brown Out voltages.

Figure 19 shows the POR/BOD operation with the 1.8 V (typical) regulated supply voltage together with the active low reset signals BOD_RESET and POR_RESET shown in the bottom of the figure (note that these signals are not available but are included on the figure for illustration purposes).

The cause of the last reset can read from the register bits `SLEEP.RST`. It should be noted that a BOD reset will be read as a POR reset.

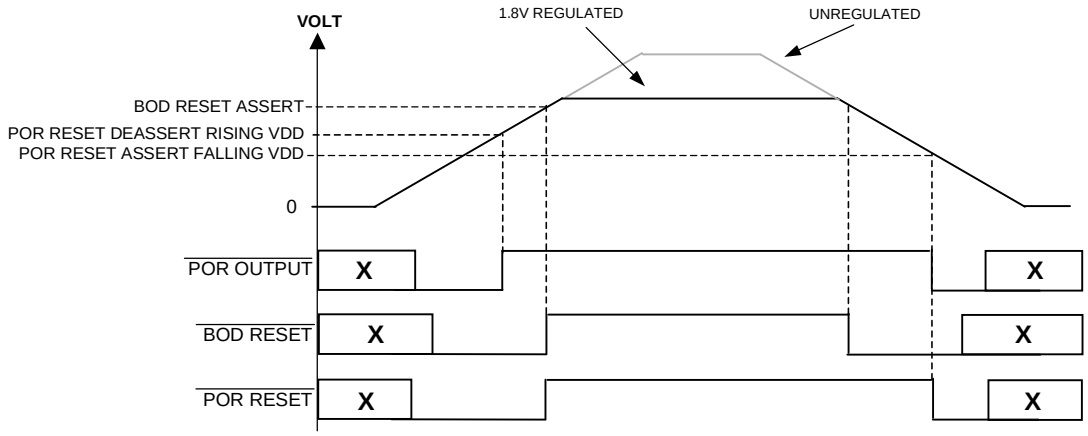

Figure 19: Power-On-Reset and Brown Out Detector Operation

12.3 Flash Controller

The ***CC1110Fx/CC1111Fx*** contains 8, 16 or 32 KB flash memory for storage of program code. The flash memory is programmable from the user software and through the debug interface. See Table 27 on Page 34 for flash memory size options.

The Flash Controller handles writing to the embedded flash memory and erasing of the same memory. The embedded flash memory consists of 8, 16, or 32 pages (each page is 1024 bytes) depending on the total flash size.

The Flash Controller has the following features:

- 16-bit word programmable
- Page erase
- Lock bits for write-protection and code security
- Flash page erase time: 20 ms
- Flash chip erase time: 200 ms
- Flash write time (2 bytes): 20 µs
- Auto power-down during low-frequency CPU clock read access (divided clock source, `CLKCON.CLKSPD`)

12.3.1 Flash Memory Organization

The flash memory is divided into 8, 16, or 32 flash pages consisting of 1 KB each. A flash page is the smallest erasable unit in the memory, while a 16-bit word is the smallest writable unit that may be addressed through the Flash Controller.

When performing write operations, the flash memory is word-addressable using a 14-bit address written to the address registers `FADDRH:FADDRL`.

When performing page erase operations, the flash memory page to be erased is addressed through the register bits `FADDRH[5:1]`.

Note the difference in addressing the flash memory; when accessed by the CPU to read code or data, the flash memory is byte-addressable. When accessed by the Flash Controller, the flash memory is word-addressable, where a word consists of 16 bits.

The next sections describe the procedures for flash write and flash page erase in detail.

12.3.2 Flash Write

Data is written to the flash memory by using a program command initiated by writing a 1 to `FCTL.WRITE`. Flash write operations can program any number of words in the flash memory, single words or block of words in sequence starting at the address set by `FADDRH:FADDRL`. A bit in a word can be changed from 1 to 0, but not from 0 - 1 (writing a 1 to a bit that is 0 will be ignored). The only way to change a 0 to a 1 is by doing a page erase or chip erase through the debug interface, as the erased bits are set to 1.

A write operation is performed using one out of two methods;

- Through DMA transfer
- Through CPU SFR access

The DMA transfer method is the preferred way to write to the flash memory.

A write operation is initiated by writing a 1 to `FCTL.WRITE`. The address to start writing at is

given by FADDRH:FADDRL. During each single write operation FCTL.SWBSY is set high. During a write operation, the data written to the FWDATA register is forwarded to the flash memory. The flash memory is 16-bit word-programmable, meaning data is written as 16-bit words. The first byte written to FWDATA is the LSB of the 16-bit word. The actual writing to flash memory takes place each time two bytes have been written to FWDATA, meaning that the number of bytes written to flash must be a multiple of two.

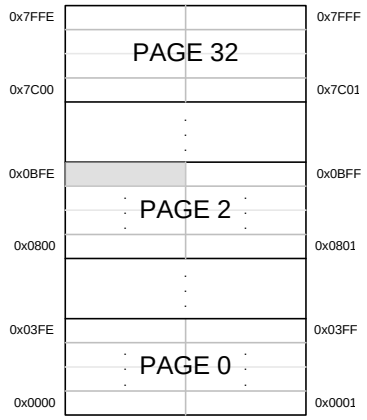

Figure 20: Flash Address (in unified memory space)

When accessed by the Flash Controller, the flash memory is word-addressable. Each page in flash consists of 512 words, addressed through FADDRH[0]:FADDRL[7:0]. FADDRH[5:1] is used to indicate the page number. That means that if one wants to write to the byte in flash mapped to address 0x0BFE, FADDRH:FADDRL should be 0x05FF (page 2, word 511).

The CPU will not be able to access the flash, e.g. to read program code, while a flash write operation is in progress. Therefore the program code executing the flash write must be executed from RAM, meaning that the program code must reside in the area starting from address 0xF000 in CODE memory space (unified) and not exceed maximum range for the device in use (***F8***, ***F16***, or ***F32***). When using the DMA to write to flash, the code can be executed from within flash memory.

When a flash write operation is executed from RAM, the CPU continues to execute code from the next instruction after initiation of the flash write operation (FCTL.WRITE=1).

The FCTL.SWBSY bit must be 0 before accessing the flash after a flash write, otherwise an access violation occurs. This means that FCTL.SWBSY must be 0 before program execution can continue from a location in flash memory.

12.3.2.1 DMA Flash Write

When using the DMA to write to flash, the data to be written is stored in the XDATA memory space (RAM or flash). A DMA channel should be configured to have the location of the stored data as source address and the Flash Write Data register, FWDATA, as the destination address. The DMA trigger event FLASH should be selected (TRIG[4:0]=10010). Please see Section 12.5 for more details regarding DMA operation. Thus the Flash Controller will trigger a DMA transfer when the Flash Write Data register, FWDATA, is ready to receive new data.

When the DMA channel is armed, starting a flash write by setting FCTL.WRITE to 1 will trigger the first DMA transfer.

Figure 21 shows an example on how a DMA channel is configured and how a DMA transfer is initiated to write a block of data from a location in XDATA to flash memory.

The DMA channel should be configured to operate in single transfer mode, the transfer count should be equal the size of the data block to be transferred (must be a multiple of 2), and each transfer should be a byte. Source address should be incremented by one for each transfer, while the destination address should be fixed.

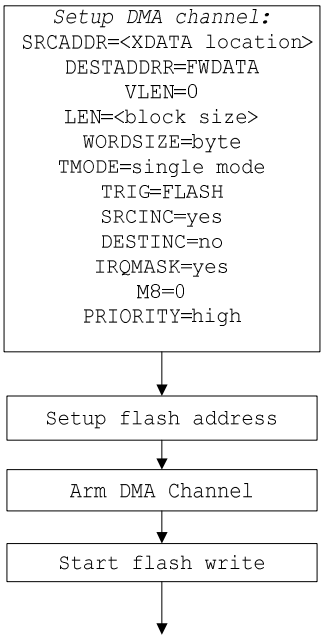

Figure 21: Flash Write using DMA

When performing DMA flash write while executing code from within flash memory, the instruction that triggers the first DMA trigger event FLASH (`TRIG[4:0]=10010`) must be aligned on a 2-byte boundary. Figure 22 shows an example of code that correctly aligns the instruction for triggering DMA (Note that this code is ***IAR*** specific). The code below is shown for ***CC1110Fx***, but will also work for ***CC1111Fx*** if the include file is being replaced by ioCC1111.h

```
; Write flash and generate FLASH DMA trigger
; Code is executed from flash memory
;
#include "ioCC1110.h"
        MODULE flashDmaTrigger.s51
        RSEG RCODE (1)
        PUBLIC halFlashDmaTrigger
        FUNCTION halFlashDmaTrigger, 0203H

        halFlashDmaTrigger:
        ORL FCTL, #0x02;
        RET;
        END;
```

Figure 22: DMA Flash Write Executed from within Flash Memory

12.3.2.2 CPU Flash Write

The CPU can also write directly to the flash when executing program code from RAM using unified memory space. The CPU writes data to the Flash Write Data register, `FWDATA`. The flash memory is written each time two bytes have been written to `FWDATA`, if a write has been enabled by setting `FCTL.WRITE` to 1. The CPU can poll the `FCTL.SWBSY` status to determine when the flash is ready for two new bytes to be written to `FWDATA`.

Note that there exist a timeout period of 40 µs for writing one flash word to `FWDATA`, thus writing two bytes to the FWDATA register has to end within 40 µs after `FCTL.SWBSY` went low and also within 40 µs after a write has been initiated by writing a 1 to `FCTL.WRITE` (see Figure 24). Failure to do so will clear the `FCTL.BUSY` bit. `FADDRH:FADDRL` will contain the address of the location where the write operation failed. A new write operation can be started by setting `FCTL.WRITE` to 1 again and write two bytes to `FWDATA`. If one wants to do the whole write operation over again and not just start from where it failed, one has to erase the page, writing the start address to `FADDRH:FADDRL`, and setting `FCTL.WRITE` to 1 (see Section 1.1.1).

The steps required to start a CPU flash write operation are shown in Figure 23. Note that code must be run from RAM in unified memory space.

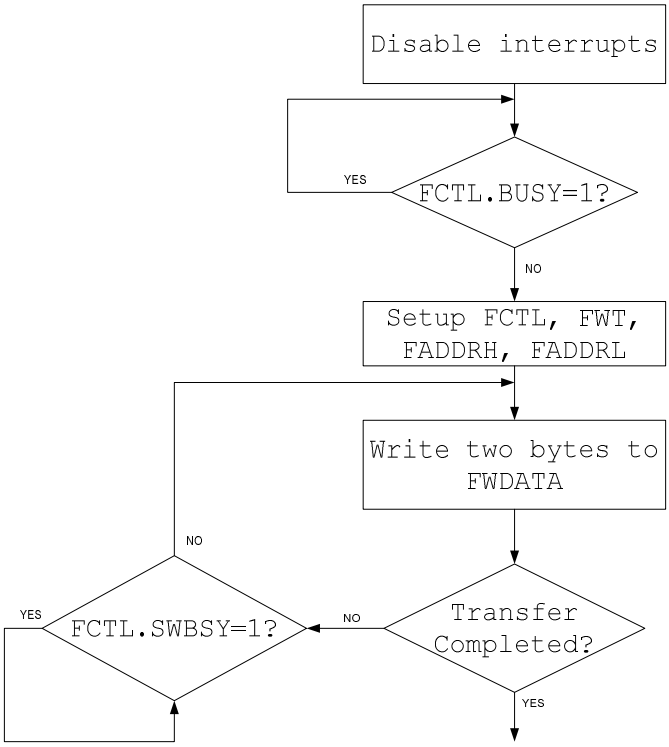

Figure 23: CPU Flash Write Executed from RAM

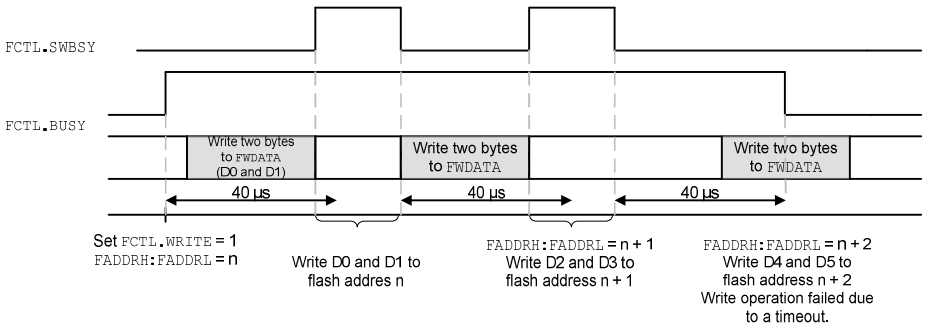

Figure 24. Flash Write Timeout

12.3.3 Flash Page Erase

After a flash page erase, all bytes in the erased page are set to 1.

A page erase is initiated by setting `FCTL.ERASE` to 1. The page addressed by `FADDRH[5:1]` is erased when a page erase is initiated. Note that if a page erase is initiated simultaneously with a page write, i.e. `FCTL.WRITE` is set to 1, the page erase will be performed before the page write operation. The `FCTL.BUSY` bit can be polled to see when the page erase has completed.

> *Note: If flash erase operations are performed from within flash memory and the watchdog timer is enabled, a watchdog timer interval must be selected that is longer than 20 ms, the duration of the flash page erase operation, so that the CPU will manage to clear the watchdog timer.*

The steps required to perform a flash page erase from within flash memory are outlined in Figure 25.

Note that, while executing program code from within flash memory, when a flash erase or write operation is initiated, program execution

will resume from the next instruction when the Flash Controller has completed the operation. The flash erase operation requires that the instruction that starts the erase i.e. writing to FCTL.ERASE is followed by a NOP instruction as shown in the example code. Omitting the NOP instruction after the flash erase operation will lead to undefined behavior.

```
; Erase page 1 in flash memory
; Assumes 26 MHz system clock is used
;
        CLR     EA                      ; Mask interrupts
C1:     MOV     A,FCTL                  ; Wait until flash controller is ready
        JB      ACC.7,C1
        MOV     FADDRH,#02h             ; Setup flash address (FADDRH[5:1]=1)
        MOV     FWT,#2Ah                ; Setup flash timing
        MOV     FCTL,#01h               ; Erase page
        NOP                             ; Must always execute a NOP after erase
        RET                             ; Continues here when flash is ready
```

Figure 25: Flash Page Erase Performed from Flash Memory

12.3.4 Flash DMA trigger

When the DMA channel is armed and the FLASH trigger selected TRIG[4:0]=10010, starting a flash write by setting FCTL.WRITE to 1 will trigger the first DMA transfer. The following DMA transfers will be triggered by the Flash Controller when the Flash Write Data register, FWDATA, is ready to receive new data.

12.3.5 Flash Write Timing

The Flash Controller contains a timing generator, which controls the timing sequence of flash write and erase operations. The timing generator uses the information set in the Flash Write Timing register, FWT.FWT[5:0], to set the internal timing. FWT.FWT[5:0] must be set to a value according to the currently selected system clock frequency.

The value used for FWT.FWT[5:0] is given by the following equation:

$$FWT = \frac{21000 \cdot F}{16 \cdot 10^9}$$

where *F* is the system clock frequency. The initial value held in FWT.FWT[5:0] after a reset is 0x11, which corresponds to 13 MHz system clock frequency (calibrated HS RCOSC frequency for CC1110Fx when using a 26 MHz XOSC).

12.3.6 Flash Controller Registers

The Flash Controller registers are described in this section.

FCTL (0xAE) - Flash Control

Bit	Field Name	Reset	R/W	Description
7	BUSY	0	R	Indicates that write or erase is in operation when set to 1
6	SWBSY	0	R	Indicates that a flash write is in progress. This byte is set to 1 after two bytes has been written to `FWDATA`. Do not write to `FWDATA` register while this bit is set.
5			R0	Not used
4	CONTRD	R/W	0	Continuous read enable 0 Disable. To avoid wasting power, continuous read should only be enabled when needed 1 Enable. Reduces internal switching of read enables, but greatly increases power consumption.
3:2		00	R0	Not used
1	WRITE	0	R0/W	When set to 1, a program command used to write data to flash memory is initiated. If `ERASE` is set to 1at the same time as this bit is set to 1, a page erase of the whole page addressed by `FADDRH[6:1]` is performed before the write. This bit will be 0 when returning from PM2 and PM3
0	ERASE	0	R0/W	Page Erase. Erase page given by `FADDRH[5:1]`. This bit will be 0 when returning from PM2 and PM3

FWDATA (0xAF) - Flash Write Data

Bit	Field Name	Reset	R/W	Description
7:0	FWDATA[7:0]	0x00	R/W	If `FCTL.WRITE` is set to 1, writing two bytes in a row to this register starts the actual writing to flash memory. `FCTL.SWBSY` will be 1 during the actual flash write

FADDRH (0xAD) - Flash Address High Byte

Bit	Field Name	Reset	R/W	Description
7:6		0	R/W	Not used
5:0	FADDRH[5:0]	000000	R/W	Page address / High byte of flash word address Bits 5:1 will select which page to access.

FADDRL (0xAC) - Flash Address Low Byte

Bit	Field Name	Reset	R/W	Description
7:0	FADDRL[7:0]	0x00	R/W	Low byte of flash address

FWT (0xAB) - Flash Write Timing

Bit	Field Name	Reset	R/W	Description
7:6		0	R/W	Not used
5:0	FWT[5:0]	0x11	R/W	Flash Write Timing. Controls flash timing generator. $FWT = \frac{21000 \cdot F}{16 \cdot 10^9}$, where *F* is the system clock frequency (see Section 12.3.5)

12.4 I/O Ports

*Note: P0_6 and P0_7 do not exist on **CC1111Fx**. The **CC1111Fx** has 19 digital input/output pins available and the ADC inputs A6 and A7 can not be used. Apart from this, all information in this section applies to both **CC1111Fx** and **CC1110Fx**. For all registers in this section, an x in the register name can be replaced by 0, 1, or, 2, referring to the port number, if nothing else is stated.*

The **CC1110Fx** has 21 digital input/output pins that can be configured as general purpose digital I/O or as peripheral I/O signals connected to the ADC, Timers, I^2S, or USART peripherals. The usage of the I/O ports is fully configurable from user software through a set of configuration registers.

The I/O ports have the following key features:

- 21 digital input/output pins
- General purpose I/O or peripheral I/O
- Pull-up or pull-down capability on inputs, except on P1_0 and P1_1.
- External interrupt capability

The external interrupt capability is available on all 21 I/O pins. Thus, external devices may generate interrupts if required. The external interrupt feature can also be used to wake up from all four power modes (PM{0 - 3}).

12.4.1 General Purpose I/O

When used as general purpose I/O, the pins are organized as three 8-bit ports, port 0, 1, and 2, denoted P0, P1, and P2. P0 and P1 are complete 8-bit wide ports while P2 has only five usable bits (P2_0 to P2_4). All ports are both bit- and byte addressable through the SFRs `P0`, `P1` and `P2`. Each port pin can individually be set to operate as a general purpose I/O or as a peripheral I/O.

Note: P1_0 and P1_1 have LED driving capabilities.

To use a port as a general purpose I/O pin the pin must first be configured. The registers `PxSEL` are used to configure each pin in a port either as a general purpose I/O pin or as a peripheral I/O signal. All digital input/output pins are configured as general-purpose I/O pins by default. Note that when the I^2S interface is enabled (`I2SCFG0.ENAB=1`), the I^2S interface will control its corresponding pins even if these are selected to be general purpose I/O pins in the `PxSEL` register.

By default, all general-purpose I/O pins are configured as inputs. To change the direction of a port pin, at any time, the registers `PxDIR` are used to set each port pin to be either an input or an output. Thus by setting the appropriate bit within `PxDIR` to 1, the corresponding pin becomes an output.

When reading the port registers `P0`, `P1`, and `P2`, the logic values on the input pins are returned regardless of the pin configuration. This does not apply during the execution of read-modify-write instructions. The read-modify-write instructions are: ANL, ORL, XRL, JBC, CPL, INC, DEC, DJNZ, and MOV, CLR, or SETB. Operating on a port registers the following is true: When the destination is an individual bit in a port register `P0`, `P1` or `P2` the value of the register, not the value on the pin, is read, modified, and written back to the port register.

When used as an input, the general purpose I/O port pins can be configured to have a pull-up, pull-down, or tri-state mode of operation. By default, inputs are configured as inputs with pull-up. To de-select the pull-up/pull-down function on an input the appropriate bit within the `PxINP` must be set to 1. The I/O port pins P1_0 and P1_1 do not have pull-up/pull-down capability.

In PM1, PM2, and PM3 the I/O pins retain the I/O mode and output value (if applicable) that was set when PM{1 - 3} was entered.

12.4.2 Unused I/O Pins

Unused I/O pins should have a defined level and not be left floating. One way to do this is to leave the pin unconnected and configure the pin as a general purpose I/O input with pull-up resistor. This is the default state of all pins after reset except for P1_0 and P1_1 which do not have pull-up/pull-down resistors (note that only P2_2 has pull-up during reset). Alternatively the pin can be configured as a general purpose I/O output. In both cases the pin should not be connected directly to VDD or GND in order to avoid excessive power consumption.

12.4.3 Low I/O Supply Voltage

In applications where the digital I/O power supply voltage VDD on pin DVDD is below 2.6 V, the register bit IOCFG1.GDO_DS should be set to 1.

12.4.4 General Purpose I/O Interrupts

General purpose I/O pins configured as inputs can be used to generate interrupts. The interrupts can be configured to trigger on either a rising or falling edge of the external signal. Each of the P0, P1 and P2 ports have separate interrupt enable bits common for all bits within the port located in the IENx registers as follows:

- IEN1.P0IE : P0 interrupt enable
- IEN2.P1IE : P1 interrupt enable
- IEN2.P2IE : P2 interrupt enable

In addition to these common interrupt enables, the bits within each port have interrupt enable bits located in I/O port SFRs. Each bit within P1 has an individual interrupt enable bit, P1_xIEN, where x is 0 - 7, located in the P1IEN register. For P0, the low-order nibble and the high-order nibble have their individual interrupt enables, P0IENL and P0IENH respectively, found in the PICTL register. For the P2_0 - P2_4 inputs there is a common interrupt enable, P2IEN, in the PICTL register.

When an interrupt condition occurs on one of the general purpose I/O pins, the corresponding interrupt status flag in the P0 - P2 interrupt status flag registers, P0IFG , P1IFG, or P2IFG will be set to 1. The interrupt status flag is set regardless of whether the pin has its interrupt enable set. The CPU interrupt flags located in IRCON2 for P1 and P2, and IRCON for P0, will only be asserted if one or more of the interrupt enable bits found in P1IEN (P1) and PICTL (P0 and P2) are set to 1. Note that the module interrupt flag needs to be cleared prior to clearing the CPU interrupt flag.

The SFRs used for I/O interrupts are described in Section 10.5 on Page 60. The registers are the following:

P1IEN: P1 interrupt enables

- PICTL: P0/P2 interrupt enables and P0, P1, and P2 edge configuration
- P0IFG: P0 interrupt status flags
- P1IFG: P1 interrupt status flags
- P2IFG: P2 interrupt status flags

Note: All port interrupts are blocked when SLEEP.MODE≠00

12.4.5 General Purpose I/O DMA

When used as general purpose I/O pins, the P0_1 and P1_3 pins are each associated with one DMA trigger. These DMA triggers are IOC_0 for P0_1 and IOC_1 for P1_3 as shown in Table 51 on Page 107.

The IOC_0 DMA trigger is activated when there is a rising edge on P0_1 (P0SEL.SELP0_1 and P0DIR.P0_1 must be 0) and IOC_1 is activated when there is a falling edge on P1_3 (P1SEL.SELP1_3 and P1DIR.P1_3 must be 0). Note that only input transitions on pins configured as general purpose I/O, inputs will produce a DMA trigger.

12.4.6 Peripheral I/O

This section describes how the digital input/output pins are configured as peripheral I/Os. For each peripheral unit that can interface with an external system through the digital input/output pins, a description of how peripheral I/Os are configured is given in the following sub-sections.

In general, setting the appropriate PxSEL bits to 1 is required to select peripheral I/O function on a digital I/O pin.

Note that peripheral units have two alternative locations for their I/O pins. Please see Table 50.

Periphery / Function	P0								P1								P2				
	7[14]	6[14]	5	4	3	2	1	0	7	6	5	4	3	2	1	0	4	3	2	1	0
ADC	A7	A6	A5	A4	A3	A2	A1	A0													
USART0 Alt. 1			C	SS	M0	MI															
SPI Alt. 2											MO	MI	C	SS							
USART0 Alt. 1			RT	CT	TX	RX															
UART Alt. 2											TX	RX	RT	CT							
USART1 Alt. 1			MI	M0	C	SS															
SPI Alt. 2									MI	M0	C	SS									
USART1 Alt. 1			RX	TX	RT	CT															
UART Alt. 2									RX	TX	RT	CT									
TIMER1 Alt. 1				2	1	0															
Alt. 2														0	1	2					
TIMER3 Alt. 1												1	0								
Alt. 2									1	0											
TIMER4 Alt. 1															1	0					
Alt. 2																		1			0
I^2S Alt. 1							CK	WS	RX	TX											
Alt. 2																		CK	WS	RX	TX
32.768 kHz XOSC																	Q2	Q1			
DEBUG																			DC	DD	

Table 50: Peripheral I/O Pin Mapping

[14] This pin is only found on CC1110Fx ,it does not exist on CC1111Fx.

12.4.6.1 USART0

The SFR bit `PERCFG.U0CFG` selects whether to use alternative 1 or alternative 2 locations. In Table 50, the USART0 signals are shown as follows:

SPI:

- SCK: C
- SSN: SS[15]
- MOSI: MO
- MISO: MI

UART:

- RXDATA: RX
- TXDATA: TX
- RTS: RT
- CTS: CT

[15] SSN should only be configured as a peripheral when using SPI slave mode

`P2DIR.PRIP0` selects the order of precedence when assigning two peripherals to the same pin location on P0. When set to 00, USART0 has precedence if both USART0 and USART1 are assigned to the same pins. Note that if USART0 is configured to operate in UART mode with hardware flow control disabled, USART1 or timer 1 will have precedence to use ports P0_4 and P0_5. It is the user's responsibility to not assign more than two peripherals to the same pin locations, as `P2DIR.PRIP0` will not give a conclusive order of precedence if more than two peripherals are in conflict on a pin.

`P2SEL.PRI3P1`, `P2SEL.PRI2P1`, `P2SEL.PRI1P1`, and `P2SEL.PRI0P1` select the order of precedence when assigning two, and in some cases three, peripherals to P1. An example is if both the USARTs are assign to P1 together with Timer 1 (channel 2, 1, and 0). By setting both `PRI3P1` and `PRI0P1` to 0, USART0 will have precedence. Note that if USART0 is configured to operate in UART mode with hardware flow control disabled, USART1 can still use P1_7 and P1_6, while Timer 1 can use P1_2, P1_1, and P1_0. Also

on P1 it is the user's responsibility to make sure that there is a conclusive order of precedence based on the PERCFG and P2SEL settings.

12.4.6.2 USART1

The SFR bit PERCFG.U1CFG selects whether to use alternative 1 or alternative 2 locations. In Table 50, the USART1 signals are shown as follows:

SPI:

- SCK: C
- SSN: SS[16]
- MOSI: MO
- MISO: MI

UART:

- RXDATA: RX
- TXDATA: TX
- RTS: RT
- CTS: CT

P2DIR.PRIP0 selects the order of precedence when assigning two peripherals to the same pin location on P0. When set to 01, USART1 has precedence if both USART0 and USART1 are assigned to the same pins. Note that if USART1 is configured to operate in UART mode with hardware flow control disabled, USART0 or timer 1 will have precedence to use ports P0_3 and P0_2. It is the user's responsibility to not assign more than two peripherals to the same pin locations, as P2DIR.PRIP0 will not give a conclusive order of precedence if more than two peripherals are in conflict on a pin.

P2SEL.PRI3P1, P2SEL.PRI2P1, P2SEL.PRI1P1, and P2SEL.PRI0P1 select the order of precedence when assigning two, and in some cases three, peripherals to P1. By setting PRI3P1 to 1 and PRI2P1 to 0, USART1 will have precedence over both USART0 and Timer 3. However, if USART1 is configured to operate in UART mode with hardware flow control disabled, there will be a conflict on P1_4 between USART0 and Timer 3 (channel 1), which the P2SEL register settings do not solve. It is the user's responsibility to avoid configurations where the order of precedence is not conclusive.

[16] SSN should only be configured as a peripheral when using SPI slave mode

12.4.6.3 Timer 1

PERCFG.T1CFG selects whether to use alternative 1 or alternative 2 locations.

In Table 50, the Timer 1 signals are shown as follows:

- Channel 0 capture/compare pin: 0
- Channel 1 capture/compare pin: 1
- Channel 2 capture/compare pin: 2

P2DIR.PRIP0 selects the order of precedence when assigning two peripherals to the same pin location on P0. When set to 10 or 11, Timer 1 has precedence over USART1 and USART0 respectively. It is the user's responsibility to not assign more than two peripherals to the same pin locations

P2SEL.PRI3P1, P2SEL.PRI2P1, P2SEL.PRI1P1, and P2SEL.PRI0P1 select the order of precedence when assigning two, and in some cases three, peripherals to P1. When P2SEL.PRI1P1=0 and P2SEL.PRI0P1=1, Timer 1 has precedence over Timer 4 and USART0 respectively. It is the user's responsibility to avoid configurations where the order of precedence is not conclusive.

12.4.6.4 Timer 3

PERCFG.T3CFG selects whether to use alternative 1 or alternative 2 locations.

In Table 50, the Timer 3 signals are shown as follows:

- Channel 0 compare pin: 0
- Channel 1 compare pin: 1

P2SEL.PRI3P1, P2SEL.PRI2P1, P2SEL.PRI1P1, and P2SEL.PRI0P1 select the order of precedence when assigning two, and in some cases three, peripherals to P1. Setting P2SEL.PRI2P1=1 gives Timer 3 precedence over USART1. It is the user's responsibility to avoid configurations where the order of precedence is not conclusive.

12.4.6.5 Timer 4

PERCFG.T4CFG selects whether to use alternative 1 or alternative 2 locations.

In Table 50, the Timer 4 signals are shown as follows:

- Channel 0 compare pin: 0
- Channel 1 compare pin: 1

P2SEL.PRI3P1, P2SEL.PRI2P1, P2SEL.PRI1P1, and P2SEL.PRI0P1 select the order of precedence when assigning two, and in some cases three, peripherals to P1. Setting P2SEL.PRI12P1=1 gives Timer 4 precedence over Timer 1. It is the user's responsibility to avoid configurations where the order of precedence is not conclusive.

12.4.6.6 I^2S

The I^2S configuration register bit I2SCFG1.IOLOC selects whether to use alternative 1 or alternative 2 locations.

In Table 50, the I^2S signals are shown as follows:

- Continuous Serial Clock (SCK): CK
- Word Select: WS
- Serial Data In: RX
- Serial Data Out: TX

If the I^2S interface is enabled (I2SCFG0_ENAB=1), the I^2S interface will have precedence in cases where other peripherals (except for the debug interface) are configured to be on the same location. This is the case even if the pins are configured to be general purpose I/O pins.

12.4.6.7 ADC

When using the ADC in an application, some or all of the P0 pins must be configured as ADC inputs. The port pins are mapped to the ADC inputs so that P0_7 - P0_0 corresponds to AIN7 - AIN0. To configure a P0 pin to be used as an ADC input the corresponding bit in the ADCCFG register must be set to 1. The default values in this register select the Port 0 pins as non-ADC input i.e. digital input/outputs.

> *Note: P0_6 and P0_7 do not exist on **CC1111Fx**, hence six input channels are available (AIN0 – AIN5)*

The settings in the ADCCFG register override the settings in P0SEL (the register used to select a pin to be either GPIO or to have a peripheral function).

The ADC can be configured to use the general-purpose I/O pin P2_0 as an external trigger to start conversions. P2_0 must be configured as a general-purpose I/O in input mode, when being used for ADC external trigger.

Refer to Section 12.10 on Page 140 for a detailed description on how to use the ADC.

12.4.6.8 Debug Interface

Ports P2_1 and P2_2 are used for debug data and clock signals, respectively. These are shown as DD (debug data) and DC (debug clock) in Table 50. The state of P2SEL is overridden by the debug interface. Also, P2DIR.DIRP2_1 and P2DIR.DIRP2_2 is overridden when the chip changes the direction to supply the external host with data.

12.4.6.9 32.768 kHz XOSC Input

Ports P2_3 and P2_4 are used to connect to an external 32.768 kHz crystal. These port pins will be set in analog mode and used by the 32.768 kHz crystal oscillator when CLKCON.OSC32K is low, regardless of the configurations of these pins.

12.4.6.10 Radio Test Output Signals

For debug and test purposes, a number of internal status signals in the radio may be output on the port pins P1_7 - P1_5. This debug option is controlled through the RF registers IOCFG2 - IOCFG0 (see Section 15 for more details).

Setting IOCFGx.GDOx_CFG to a value other than 0 will override the P1SEL_SELP1_7, P1SEL_SELP1_6, and P1SEL_SELP1_5 settings, and the pins will automatically become outputs. These pins cannot be used when the I^2S interface is enabled.

12.4.7 I/O Registers

The registers for the IO ports are described in this section. The registers are:

- P0 Port 0
- P1 Port 1
- P2 Port 2
- PERCFG Peripheral Control
- ADCCFG ADC Input Configuration
- P0SEL Port 0 Function Select
- P1SEL Port 1 Function Select
- P2SEL Port 2 Function Select

- `P0DIR` Port 0 Direction
- `P1DIR` Port 1 Direction
- `P2DIR` Port 2 Direction
- `P0INP` Port 0 Input Mode
- `P1INP` Port 1 Input Mode
- `P2INP` Port 2 Input Mode
- `P0IFG` Port 0 Interrupt Status Flag
- `P1IFG` Port 1 Interrupt Status Flag
- `P2IFG` Port 2 Interrupt Status Flag
- `PICTL` Port Interrupt Control
- `P1IEN` Port 1 Interrupt Mask

P0 (0x80) - Port 0

Bit	Field Name	Reset	R/W	Description
7:0	P0[7:0]	0xFF	R/W	Port 0. General purpose I/O port. Bit-addressable.

P1 (0x90) - Port 1

Bit	Field Name	Reset	R/W	Description
7:0	P1[7:0]	0xFF	R/W	Port 1. General purpose I/O port. Bit-addressable.

P2 (0xA0) - Port 2

Bit	Field Name	Reset	R/W	Description
7:5		111	R/W	Not used
4:0	P2[4:0]	11111	R/W	Port 2. General purpose I/O port. Bit-addressable.

PERCFG (0xF1) - Peripheral Control

Bit	Field Name	Reset	R/W	Description	
7		0	R0	Not used	
6	T1CFG	0	R/W	Timer 1 I/O location	
				0	Alternative 1 location
				1	Alternative 2 location
5	T3CFG	0	R/W	Timer 3 I/O location	
				0	Alternative 1 location
				1	Alternative 2 location
4	T4CFG	0	R/W	Timer 4 I/O location	
				0	Alternative 1 location
				1	Alternative 2 location
3:2		00	R0	Not used	
1	U1CFG	0	R/W	USART1 I/O location	
				0	Alternative 1 location
				1	Alternative 2 location
0	U0CFG	0	R/W	USART0 I/O location	
				0	Alternative 1 location
				1	Alternative 2 location

ADCCFG (0xF2) - ADC Input Configuration

Bit	Field Name	Reset	R/W	Description	
7:0	ADCCFG[7:0]	0x00	R/W	ADC input configuration. ADCCFG[7:0] select P0_7 - P0_0 as ADC inputs AIN7 - AIN0	
				0	ADC input disabled
				1	ADC input enabled

P0SEL (0xF3) - Port 0 Function Select

Bit	Field Name	Reset	R/W	Description	
7:0	SELP0_[7:0]	0x00	R/W	P0_7 to P0_0 function select	
				0	General purpose I/O
				1	Peripheral function

P1SEL (0xF4) - Port 1 Function Select

Bit	Field Name	Reset	R/W	Description	
7:0	SELP1_[7:0]	0	R/W	P1_7 to P1_0 function select	
				0	General purpose I/O
				1	Peripheral function

P2SEL (0xF5) - Port 2 Function Select

Bit	Field Name	Reset	R/W	Description	
7		0	R0	Not used	
6	PRI3P1	0	R/W	Port 1 peripheral priority control. These bits shall determine the order of precedence in the case when PERCFG assigns USART0 and USART1 to the same pins.	
				0	USART0 has priority
				1	USART1 has priority
5	PRI2P1	0	R/W	Port 1 peripheral priority control. These bits shall determine the order of precedence in the case when PERCFG assigns USART1 and timer 3 to the same pins.	
				0	USART1 has priority
				1	Timer 3 has priority
4	PRI1P1	0	R/W	Port 1 peripheral priority control. These bits shall determine the order of precedence in the case when PERCFG assigns timer 1 and timer 4 to the same pins.	
				0	Timer 1 has priority
				1	Timer 4 has priority
3	PRI0P1	0	R/W	Port 1 peripheral priority control. These bits shall determine the order of precedence in the case when PERCFG assigns USART0 and timer 1 to the same pins.	
				0	USART0 has priority
				1	Timer 1 has priority
2	SELP2_4	0	R/W	P2_4 function select	
				0	General purpose I/O
				1	Peripheral function
1	SELP2_3	0	R/W	P2_3 function select	
				0	General purpose I/O
				1	Peripheral function
0	SELP2_0	0	R/W	P2_0 function select	
				0	General purpose I/O
				1	Peripheral function

P0DIR (0xFD) - Port 0 Direction

Bit	Field Name	Reset	R/W	Description	
7:0	DIRP0_[7:0]	0x00	R/W	P0_7 to P0_0 I/O direction	
				0	Input
				1	Output

P1DIR (0xFE) - Port 1 Direction

Bit	Field Name	Reset	R/W	Description	
7:0	DIRP1_[7:0]	0x00	R/W	P1_7 to P1_0 I/O direction	
				0	Input
				1	Output

P2DIR (0xFF) - Port 2 Direction

Bit	Field Name	Reset	R/W	Description	
7:6	PRIP0[1:0]	00	R/W	Port 0 peripheral priority control. These bits shall determine the order of precedence in the case when PERCFG assigns two peripherals to the same pins	
				00	USART0 - USART1
				01	USART1 - USART0
				10	Timer 1 channels 0 and 1 - USART1
				11	Timer 1 channel 2 - USART0
5		0	R0	Not used	
4:0	DIRP2_[4:0]	00000	R/W	P2_4 to P2_0 I/O direction	
				0	Input
				1	Output

P0INP (0x8F) - Port 0 Input Mode

Bit	Field Name	Reset	R/W	Description	
7:0	MDP0_[7:0]	0x00	R/W	P0_7 to P0_0 I/O input mode	
				0	Pull-up / pull-down
				1	Tristate

P1INP (0xF6) - Port 1 Input Mode

Bit	Field Name	Reset	R/W	Description	
7:2	MDP1_[7:2]	000000	R/W	P1_7 to P1_2 I/O input mode, note that P1_1 and P1_0 do not have pull capability	
				0	Pull-up / pull-down
				1	Tristate
1:0		00	R0	Not used	

P2INP (0xF7) - Port 2 Input Mode

Bit	Field Name	Reset	R/W	Description	
7	PDUP2	0	R/W	Port 2 pull-up/down select. Selects function for all Port 2 pins configured as pull-up/pull-down inputs.	
				0	Pull-up
				1	Pull-down
6	PDUP1	0	R/W	Port 1 pull-up/down select. Selects function for all Port 1 pins configured as pull-up/pull-down inputs, except for P1_0 and P1_1, which do not have pull-up/down capability.	
				0	Pull-up
				1	Pull-down
5	PDUP0	0	R/W	Port 0 pull-up/down select. Selects function for all Port 0 pins configured as pull-up/pull-down inputs.	
				0	Pull-up
				1	Pull-down
4:0	MDP2_[4:0]	00000	R/W	P2_4 to P2_0 I/O input mode	
				0	Pull-up / pull-down
				1	Tristate

P0IFG (0x89) - Port 0 Interrupt Status Flag

CC1110Fx

Bit	Field Name	Reset	R/W	Description	
7:0	P0IF[7:0]	0x00	R/W0	Port 0, inputs 7 to 0 interrupt status flags.	
				0	No interrupt pending
				1	Interrupt pending

CC1111Fx

Bit	Field Name	Reset	R/W	Description	
7	USB_RESUME	0	R/W0	USB resume detected during suspend mode	
6		0	R/W0	Not used	
5:0	P0IF[5:0]	0	R/W0	Port 0, inputs 5 to 0 interrupt status flags.	
				0	No interrupt pending
				1	Interrupt pending

P1IFG (0x8A) - Port 1 Interrupt Status Flag

Bit	Field Name	Reset	R/W	Description	
7:0	P1IF[7:0]	0x00	R/W0	Port 1, inputs 7 to 0 interrupt status flags.	
				0	No interrupt pending
				1	Interrupt pending

P2IFG (0x8B) - Port 2 Interrupt Status Flag

Bit	Field Name	Reset	R/W	Description	
7:5		0	R0	Not used	
4:0	P2IF[4:0]	0	R/W0	Port 2, inputs 4 to 0 interrupt status flags.	
				0	No interrupt pending
				1	Interrupt pending

PICTL (0x8C) - Port Interrupt Control

Bit	Field Name	Reset	R/W	Description	
7		0	R0	Not used	
6		0	R/W	Not Used	
5	P2IEN	0	R/W	Port 2, inputs 4 to 0 interrupt enable.	
				0	Interrupts are disabled
				1	Interrupts are enabled
4	P0IENH	0	R/W	Port 0, inputs 7 to 4 interrupt enable.	
				0	Interrupts are disabled
				1	Interrupts are enabled
3	P0IENL	0	R/W	Port 0, inputs 3 to 0 interrupt enable.	
				0	Interrupts are disabled
				1	Interrupts are enabled
2	P2ICON	0	R/W	Port 2, inputs 4 to 0 interrupt configuration. This bit selects the interrupt request condition for all port 2 inputs	
				0	Rising edge on input gives interrupt
				1	Falling edge on input gives interrupt
1	P1ICON	0	R/W	Port 1, inputs 7 to 0 interrupt configuration. This bit selects the interrupt request condition for all port 1 inputs	
				0	Rising edge on input gives interrupt
				1	Falling edge on input gives interrupt
0	P0ICON	0	R/W	Port 0, inputs 7 to 0 interrupt configuration. This bit selects the interrupt request condition for all port 0 inputs. For CC1111Fx , this bit must be set to 0 when USB is used, since the internal USB resume interrupt mapped to P0[7] uses rising edge.	
				0	Rising edge on input gives interrupt
				1	Falling edge on input gives interrupt

P1IEN (0x8D) - Port 1 Interrupt Mask

Bit	Field Name	Reset	R/W	Description	
7:0	P1_[7:0]IEN	0x00	R/W	Port P1_7 to P1_0 interrupt enable	
				0	Interrupts are disabled
				1	Interrupts are enabled

12.5 DMA Controller

The **CC1110Fx/CC1111Fx** includes a direct memory access (DMA) controller, which can be used to relieve the 8051 CPU core of handling data movement operations. Because of this, the **CC1110Fx/CC1111Fx** can achieve high overall performance with good power efficiency. The DMA controller can move data from a peripheral unit such as the ADC or RF transceiver to memory with minimum CPU intervention.

The DMA controller coordinates all DMA transfers, ensuring that DMA requests are prioritized appropriately relative to each other and CPU memory access. The DMA controller contains 5 programmable DMA channels for data movement.

The DMA controller controls data movement over the entire XDATA memory space. Since most of the SFRs are mapped into the XDATA memory space these flexible DMA channels can be used to unburden the CPU in innovative ways, e.g. feed a USART and I^2S with data from memory, periodically transfer samples between ADC and memory, transfer data to and from USB FIFOs (**CC1111Fx**) etc. Use of the DMA can also reduce system power consumption by keeping the CPU idle and not have it to wake up to move data to or from a peripheral unit (see Section 12.1.2). Note that Section 10.2.3.3 describes which SFRs are not mapped into XDATA memory space.

The main features of the DMA controller are as follows:

- Five independent DMA channels
- Three configurable levels of DMA channel priority
- 30 configurable trigger events
- Independent control of source and destination address
- Single, block, and repeated transfer modes
- Supports variable transfer count length by including the length field in the data to be transferred
- Can operate in either word-size or byte-size mode

12.5.1 DMA Operation

There are five DMA channels available in the DMA controller numbered channel 0 to channel 4. Each DMA channel can move data from one place within XDATA memory space to another i.e. between XDATA locations. Some CPU-specific SFRs reside inside the CPU core and can only be accessed using the SFR memory space and can therefore not be accessed using DMA. These registers are shown in gray in Table 30 on Page 47.

> *Note: In the following sections, an n in the register name represent the channel number 0, 1, 2, 3, or 4 if nothing else is stated*

In order to use a DMA channel it must first be configured as described in Sections 0 and 12.5.3.

Once a DMA channel has been configured it must be armed before any transfers are allowed to be initiated. A DMA channel is armed by setting the appropriate bit `DMAARMn` in the DMA Channel Arm register `DMAARM`.

When a DMA channel is armed it will start to move data when the configured DMA trigger event occurs. When a DMA channel is armed a transfer will begin when the configured DMA trigger event occurs. Note that it takes 9 system clocks from the arm bit is set until the new configuration is loaded. While the new configuration is being loaded, the DMA channel will be able to accept triggers. This will, however, not be the trigger stored in the configuration data that are currently loaded, but the trigger last used with this channel (after a reset this will be trigger number 0, manual trigger using the `DMAREQ.DMAREQn` bit). If n channels are armed at the same time, loading the configuration takes n x 9 clock cycles. Channel 1 will first be ready, then channel 2, and finally channel 0. It can not be assumed that channel 1 is ready after 9 clock cycles, channel 2 after 18 clock cycles, etc. To avoid having the DMA channels starting to move data on unwanted triggers when changing configuration, a dummy configuration should be loaded in-between configuration changes, setting `TRIG` to 0. Alternatively, abort the currently armed DMA channel before rearming it. There are 30 possible DMA trigger events, e.g. UART transfer, Timer overflow etc. The DMA trigger events are listed in Table 51.

Figure 26 shows a DMA operation flow chart.

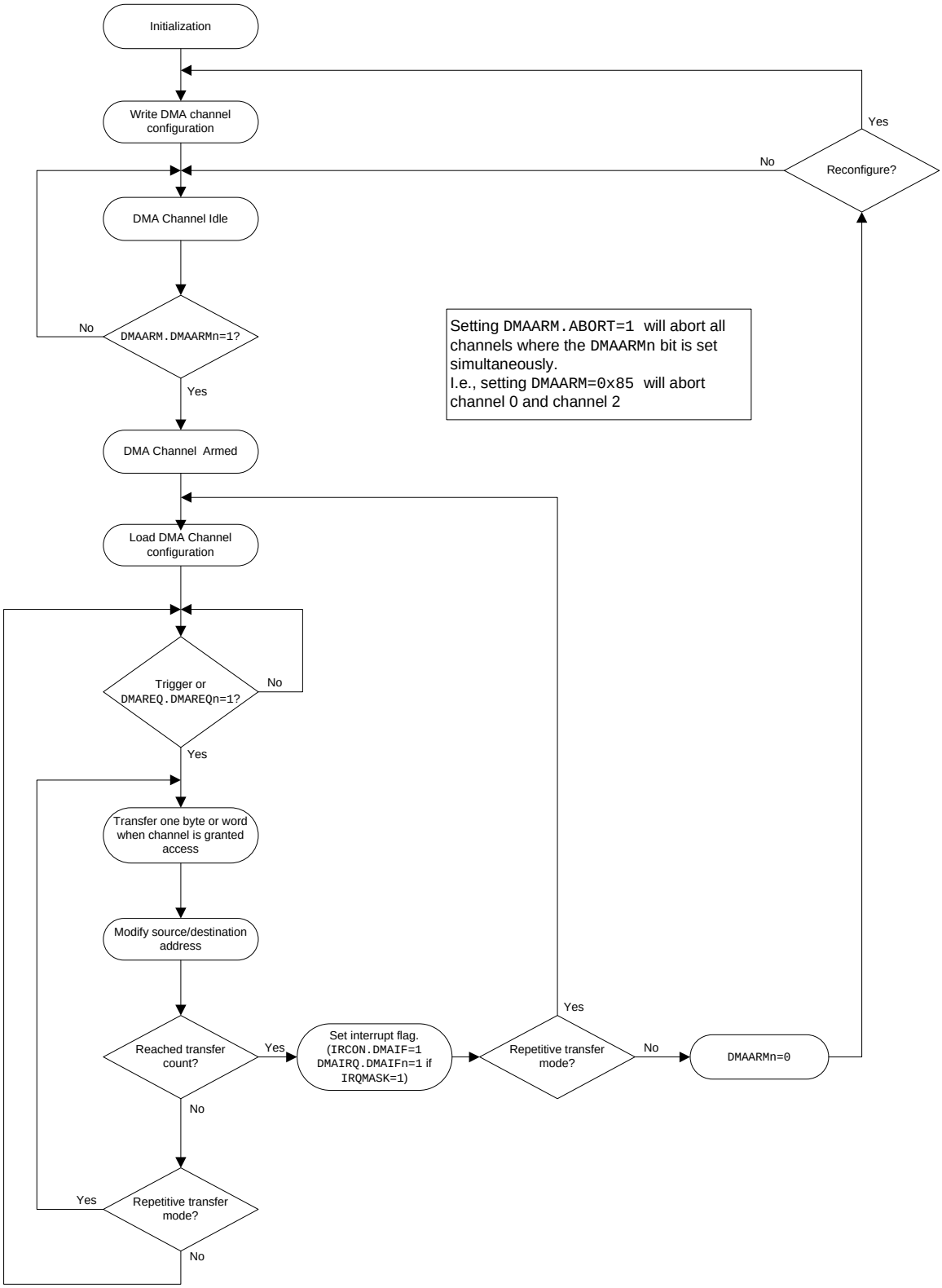

Figure 26: DMA Operation

12.5.2 DMA Configuration Parameters

Setup and control of the DMA operation is performed by the user software. This section describes the parameters which must be configured before a DMA channel can be used. Section 12.5.3 on Page 105 describes how the parameters are set up in software and passed to the DMA controller.

The behavior of each of the five DMA channels is configured with the following parameters:

12.5.2.1 Source Address (SRCADDR)

The address of the location in XDATA memory space where the DMA channel shall start to read data.

12.5.2.2 Destination Address (DESTADDR)

The address of the location in XDATA memory space where the DMA channel will write the data read from the source address. The user must ensure that the destination is writable.

12.5.2.3 Transfer Count

The number of bytes/words needed to be moved from source to destination. When the transfer count is reached, the DMA controller rearms or disarms the DMA channel (depending on transfer mode) and alert the CPU by setting the `DMAIRQ.DMAIFn` bit to 1. If `IRQMASK=1`, `IRCON.DMAIF` will also be set and an interrupt request is generated if `IEN1.DMAIE=1`. The transfer count can be of fixed or variable length depending on how the DMA channel is configured.

Fixed Length Transfer Count: When `VLEN=000` or `VLEN=111`, the transfer count is set by the `LEN` setting.

Variable Length Transfer Count: When `VLEN≠000` and `VLEN≠111`, the transfer count is given by the value of the first byte/word in source data, n, + a constant given by the VLEN setting. This allows for variable length transfer count.

> *Note: For byte size transfers (see Section 12.5.2.4), n is defined as the first byte in source data or the 7 LSB of the first byte in source data, depending on the M8 setting (see Section 12.5.2.9). For word size transfers, n is the 13 LSB of the first word in source data.*

There are four possible configurations:

1. `VLEN=001`

   Transfer number of bytes/words commanded by n + 1

2. `VLEN=010`

   Transfer number of bytes/words commanded by n

3. `VLEN=011`

   Transfer number of bytes/words commanded by n + 2

4. `VLEN=100`

   Transfer number of bytes/words commanded by n + 3

For all of the above configurations, the transfer count will be limited to `LEN` bytes/words when n ≥ `LEN`. In cases where n < `LEN`, the transfer count is given by the `VLEN` setting. This means that when `VLEN=010`, `LEN` should be equal to n_{max}, while in the other three cases, `LEN` should be set to n_{max} + 1.

Figure 27 shows the different `VLEN` options.

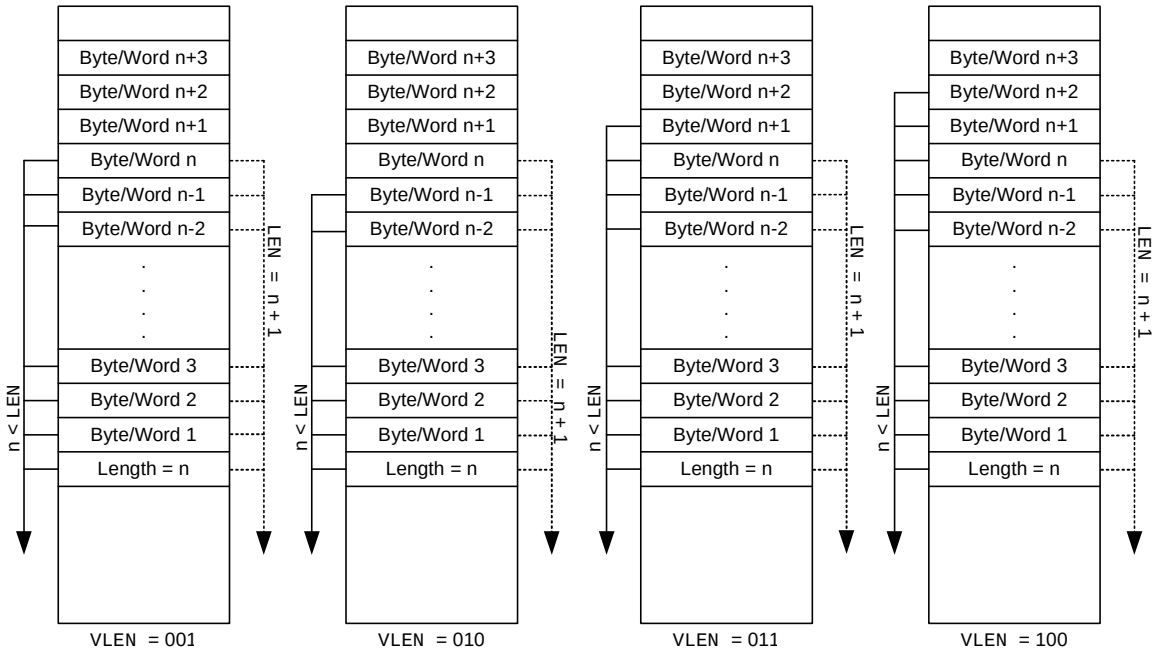

If n ≥ LEN, LEN bytes/words are being transferred. The dotted line shows the case where LEN = n + 1

Figure 27: Variable Length Transfer Count Options

12.5.2.4 Byte or Word Transfers (WORDSIZE)

Determines whether each transfer should be 8-bit (byte) or 16-bit (word).

12.5.2.5 Transfer Mode (TMODE)

The transfer mode determines how the DMA channel behaves when transferring data. There are four different transfer modes.

Single. On a trigger a single byte/word transfer occurs and the DMA channel awaits the next trigger. After completing the number of transfers specified by the transfer count, the CPU is notified (DMAIRQ.DMAIFn=1) and the DMA channel is disarmed.

Block. On a trigger the number of byte/word transfers specified by the transfer count is performed as quickly as possible, after which the CPU is notified (DMAIRQ.DMAIFn=1) and the DMA channel is disarmed.

Repeated single. On a trigger a single byte/word transfer occurs and the DMA channel awaits the next trigger. After completing the number of transfers specified by the transfer count, the CPU is notified (DMAIRQ.DMAIFn=1) and the DMA channel is rearmed.

Repeated block. On a trigger the number of byte/word transfers specified by the transfer count is performed as quickly as possible, after which the CPU is notified (DMAIRQ.DMAIFn=1) and the DMA channel is rearmed.

12.5.2.6 Trigger Event (TRIG)

A DMA trigger event will initiate a single byte/word transfer, a block transfer, or repeated versions of these. Each DMA channel can be set up to sense on a single trigger. The TRIG field in the configuration determines which trigger the DMA channel is to use. In addition to the configured trigger, a DMA channel can always be triggered by setting its designated DMAREQ.DMAREQn flag. The DMA trigger sources are described in Table 51 on Page 107.

12.5.2.7 Source and Destination Increment (SRCINC and DESTINC)

When the DMA channel is armed or rearmed, the source and destination addresses are transferred to internal address pointers. These pointers, and hence the source and destination addresses, can be controlled to increment, decrement, or not change between byte/word transfers in order to give good

flexibility. The possibilities for address increment/decrement are:

- *Increment by zero.* The address pointer shall remain fixed after each byte/word transfer.
- *Increment by one.* The address pointer shall increment one count after each byte/word transfer.
- *Increment by two.* The address pointer shall increment two counts after each byte/word transfer.
- *Decrement by one.* The address pointer shall decrement one count after each byte/word transfer.

12.5.2.8 Interrupt Mask (IRQMASK)

If this bit is set to 1, the CPU interrupt flag `IRCON.DMAIF=1` will be asserted when the transfer count is reached. An interrupt request is being generated if `IEN1.DMAIE=1`.

12.5.2.9 Mode 8 Setting (M8)

When variable length transfer count is used (`VLEN≠000` and `VLEN≠111`) this field determines whether to use seven or eight bits of the first byte in source data to determine the transfer count. This configuration is only applicable when doing byte transfers.

12.5.2.10 DMA Priority (PRIORITY)

A DMA priority is associated with each DMA channel. The DMA priority is used to determine the winner in the case of multiple simultaneous internal memory requests, and whether the DMA memory access should have priority or not over a simultaneous CPU memory access. In case of an internal tie, a round-robin scheme is used to ensure access for all. There are three levels of DMA priority:

High: Highest internal priority. DMA access will always prevail over CPU access.

Normal: Second highest internal priority. Guarantees that DMA access prevails over CPU on at least every second try.

Low: Lowest internal priority. DMA access will always defer to a CPU access.

12.5.3 DMA Configuration Setup

The DMA channel parameters such as address mode, transfer mode and priority described in the previous section have to be configured before a DMA channel can be armed and activated. The parameters are not configured directly through SFRs, but instead they are written in a special DMA configuration data structure in memory. Each DMA channel in use requires its own DMA configuration data structure. The DMA configuration data structure consists of eight bytes and is described in Table 52. A DMA configuration data structure may reside at any location in unified memory space decided upon by the user software, and the address location is passed to the DMA controller through a set of SFRs `DMAxCFGH:DMAxCFGL` (x is 0 or 1). Once a channel has been armed, the DMA controller will read the configuration data structure for that channel, given by the address in `DMAxCFGH:DMAxCFGL`.

It is important to note that the method for specifying the start address for the DMA configuration data structure differs between DMA channel 0 and DMA channels 1 - 4 as follows:

`DMA0CFGH:DMA0CFGL` gives the start address for DMA channel 0 configuration data structure.

`DMA1CFGH:DMA1CFGL` gives the start address for DMA channel 1 configuration data structure followed by channel 2 - 4 configuration data structures.

This means that the DMA controller expects the DMA configuration data structures for DMA channels 1 - 4 to lie in a contiguous area in memory, starting at the address held in `DMA1CFGH:DMA1CFGL` and consisting of 32 bytes.

12.5.4 Aborting Transfers

Ongoing byte/word transfers or armed DMA channels will be aborted using the `DMAARM` register to disarm the DMA channel.

One or more DMA channels are aborted by writing a 1 to `DMAARM.ABORT` register bit, and at the same time select which DMA channels to abort by setting the corresponding, `DMAARM.DMAARMn` bits to 1. When setting `DMAARM.ABORT` to 1, the `DMAARM.DMAARMn` bits for non-aborted channels must be written as 0.

An example of DMA channel arm and disarm is shown in Figure 28.

```
MOV DMAARM, #0x03   ; Arm DMA channel 0 and 1
MOV DMAARM, #0x81   ; Disarm DMA channel 0, channel 1 is still armed
```

Figure 28: DMA Arm/Disarm Example

12.5.5 DMA Interrupts

Each DMA channel can be configured to generate an interrupt to the CPU when the transfer count is reached. This is accomplished by setting the `IRQMASK` bit in the channel configuration to 1. When this bit is set to 1, `IRCON.DMAIF=1` will be set to 1 when reaching the transfer count. An interrupt request is being generated if `IEN1.DMAIE=1`.

Regardless of the `IRQMASK` bit in the channel configuration, `DMAIRQ.DMAIFn` will be set upon DMA channel complete. Thus software should always check (and clear) this register when rearming a channel with a changed IRQMASK setting. Failure to do so could generate an interrupt based on the stored interrupt flag.

12.5.6 DMA Memory Access

The byte/word transfer is affected by endian convention. This as the memory system use Big-Endian in XDATA memory, while Little-Endian is used in SFR memory. This must be accounted for in compilers.

12.5.7 DMA USB Endianess (CC1111Fx)

When a USB FIFO is accessed using word transfer, the endianess of the word read/written can be controlled by setting the `ENDIAN.USBWLE` and `ENDIAN.USBRLE` configuration bits in the `ENDIAN` register. See Section 12.16 for details.

DMA Trigger Number	DMA Trigger Name	Functional Unit	Description
0	NONE	DMA	No trigger, setting DMAREQ.DMAREQx bit starts a single byte/word transfer or a block transfer
1	PREV	DMA	DMA channel is triggered by completion of previous channel
2	T1_CH0	Timer 1	Timer 1, capture/compare, channel 0
3	T1_CH1	Timer 1	Timer 1, capture/compare, channel 1
4	T1_CH2	Timer 1	Timer 1, capture/compare, channel 2
5			Not in use.
6	T2_OVFL	Timer 2	Timer 2, timer count reaches 0x00
7	T3_CH0	Timer 3	Timer 3, compare, channel 0
8	T3_CH1	Timer 3	Timer 3, compare, channel 1
9	T4_CH0	Timer 4	Timer 4, compare, channel 0
10	T4_CH1	Timer 4	Timer 4, compare, channel 1
11			Do not use
12	IOC_0	IO Controller	P0_1 input transition[17]
13	IOC_1	IO Controller	P1_3 input transition[18]
14	URX0	USART0	USART0 RX complete
15	UTX0	USART0	USART0 TX complete
16	URX1	USART1	USART1 RX complete
17	UTX1	USART1	USART1 TX complete

[17] Trigger on rising edge. `P0SEL.SELP0_1` and `P0DIR.P0_1` must be 0
[18] Trigger on falling edge. `P1SEL.SELP1_3` and `P1DIR.P1_3` must be 0

DMA Trigger Number	DMA Trigger Name	Functional Unit	Description
18	FLASH	Flash Controller	Flash data write complete
19	RADIO	Radio	RF packet byte received/transmit
20	ADC_CHALL	ADC	ADC end of a conversion in a sequence, sample ready
21	ADC_CH0	ADC	ADC end of conversion (AIN0, single-ended or AIN0 - AIN1, differential). Sample ready
22	ADC_CH1	ADC	ADC end of conversion (AIN1, single-ended or AIN0 - AIN1, differential). Sample ready
23	ADC_CH2	ADC	ADC end of conversion (AIN2, single-ended or AIN2 - AIN3, differential). Sample ready
24	ADC_CH3	ADC	ADC end of conversion (AIN3, single-ended or AIN2 - AIN3, differential). Sample ready
25	ADC_CH4	ADC	ADC end of conversion (AIN4, single-ended or AIN4 - AIN5, differential). Sample ready
26	ADC_CH5	ADC	ADC end of conversion (AIN5, single-ended or AIN4 - AIN5, differential). Sample ready
27	ADC_CH6	ADC	ADC end of conversion (AIN6, single-ended or AIN6 - AIN7, differential). Sample ready
	I2SRX	I^2S	I^2S RX complete
28	ADC_CH7	ADC	ADC end of conversion (AIN7, single-ended or AIN6 - AIN7, differential). Sample ready
	I2STX	I^2S	I^2S TX complete
29	ENC_DW	AES	AES encryption processor requests download input data
30	ENC_UP	AES	AES encryption processor requests upload output data

Table 51: DMA Trigger Sources

Byte Offset	Bit	Field Name	Description	
0	7:0	SRCADDR[15:8]	The DMA channel source address, high byte	
1	7:0	SRCADDR[7:0]	The DMA channel source address, low byte	
2	7:0	DESTADDR[15:8]	The DMA channel destination address, high byte. Note that flash memory is not directly writeable.	
3	7:0	DESTADDR[7:0]	The DMA channel destination address, low byte. Note that flash memory is not directly writeable.	
4	7:5	VLEN[2:0]	Transfer count mode.	
			000	Use LEN for transfer count
			001	Transfer number of bytes/words commanded by n + 1
			010	Transfer number of bytes/words commanded by n
			011	Transfer number of bytes/words commanded by n + 2
			100	Transfer number of bytes/words commanded by n + 3
			101	Reserved
			110	Reserved
			111	Alternative for using LEN as transfer count
			Note: For byte size transfers (see Section 12.5.2.4), n is defined as the first byte in source data or the 7 LSB of the first byte in source data, depending on the M8 setting (see Section12.5.2.9). For word size transfers, n is the 13 LSB of the first word in source data	
4	4:0	LEN[12:8]	This value is used as transfer count when VLEN=000 or VLEN=111 (fixed length transfer count). For all cases where VLEN≠000 and VLEN≠111 (variable length transfer count), the transfer count will be limited to LEN bytes/words when n ≥ LEN. In cases where n < LEN, the transfer count is given by the VLEN setting.	
5	7:0	LEN[7:0]		
6	7	WORDSIZE	Selects whether each transfer shall be 8-bit (0) or 16-bit (1).	
6	6:5	TMODE[1:0]	Transfer mode:	
			00	Single
			01	Block
			10	Repeated single
			11	Repeated block
6	4:0	TRIG[4:0]	Select DMA trigger	
			00000	No trigger (writing to DMAREQ is only trigger)
			00001	The previous DMA channel finished
			00010 - 11111	Selects one of the triggers shown in Table 51. The trigger is selected in the order shown in the table.
7	7:6	SRCINC[1:0]	Source address increment mode (after each transfer)	
			00	0 bytes/words
			01	1 bytes/words
			10	2 bytes/words
			11	–1 bytes/words
7	5:4	DESTINC[1:0]	Destination address increment mode (after each transfer)	
			00	0 bytes/words
			01	1 bytes/words
			10	2 bytes/words
			11	–1 bytes/words

Byte Offset	Bit	Field Name	Description	
7	3	IRQMASK	Interrupt Mask for this channel.	
			0	Disable interrupt generation
			1	Enable interrupt generation upon reaching transfer count
7	2	M8	When variable length transfer count is used (`VLEN≠000` and `VLEN≠111`) this field determines whether to use seven or eight bits of the first byte in source data to determine the transfer count. Only applicable when `WORDSIZE=0`.	
			0	Use all 8 bits
			1	Use 7 LSB
7	1:0	PRIORITY[1:0]	The DMA channel priority:	
			00	Low, DMA access will always defer to a CPU access
			01	Normal, guarantees that DMA access prevails over CPU on at least every second try.
			10	High, DMA access will always prevail over CPU access.
			11	Reserved

Table 52: DMA Configuration Data Structure

12.5.8 DMA Registers

This section describes the SFRs associated with the DMA Controller.

DMAARM (0xD6) - DMA Channel Arm

Bit	Field Name	Reset	R/W	Description	
7	ABORT	0	R0/W	DMA abort. Ongoing byte/word transfers or armed DMA channels will be aborted when writing a 1 to this bit, and at the same time select which DMA channels to abort by setting the corresponding, `DMAARM.DMAARMn` bits to 1	
				0	Normal operation
				1	Abort channels all selected channels
6:5		0	R0	Not used	
4	DMAARM4	0	R/W	DMA arm channel 4 This bit must be set to 1 in order for any byte/word transfers to occur on the channel. For non-repetitive transfer modes, the bit is automatically cleared when the transfer count is reached	
3	DMAARM3	0	R/W	DMA arm channel 3 This bit must be set to 1 in order for any byte/word transfers to occur on the channel. For non-repetitive transfer modes, the bit is automatically cleared when the transfer count is reached	
2	DMAARM2	0	R/W	DMA arm channel 2 This bit must be set to 1 in order for any byte/word transfers to occur on the channel. For non-repetitive transfer modes, the bit is automatically cleared when the transfer count is reached	
1	DMAARM1	0	R/W	DMA arm channel 1 This bit must be set to 1 in order for any byte/word transfers to occur on the channel. For non-repetitive transfer modes, the bit is automatically cleared when the transfer count is reached	
0	DMAARM0	0	R/W	DMA arm channel 0 This bit must be set to 1 in order for any byte/word transfers to occur on the channel. For non-repetitive transfer modes, the bit is automatically cleared when the transfer count is reached	

DMAREQ (0xD7) - DMA Channel Start Request and Status

Bit	Field Name	Reset	R/W	Description
7:5		000	R0	Not used
4	DMAREQ4	0	R/W1 H0	DMA channel 4, manual trigger Setting this bit to 1 will have the same effect as a single trigger event. This bit is cleared when the DMA channel is granted access.
3	DMAREQ3	0	R/W1 H0	DMA channel 3, manual trigger Setting this bit to 1 will have the same effect as a single trigger event. This bit is cleared when the DMA channel is granted access.
2	DMAREQ2	0	R/W1 H0	DMA channel 2, manual trigger Setting this bit to 1 will have the same effect as a single trigger event. This bit is cleared when the DMA channel is granted access.
1	DMAREQ1	0	R/W1 H0	DMA channel 1, manual trigger Setting this bit to 1 will have the same effect as a single trigger event. This bit is cleared when the DMA channel is granted access.
0	DMAREQ0	0	R/W1 H0	DMA channel 0, manual trigger Setting this bit to 1 will have the same effect as a single trigger event. This bit is cleared when the DMA channel is granted access.

DMA0CFGH (0xD5) - DMA Channel 0 Configuration Address High Byte

Bit	Field Name	Reset	R/W	Description
7:0	DMA0CFG[15:8]	0x00	R/W	The DMA channel 0 configuration address, high byte

DMA0CFGL (0xD4) - DMA Channel 0 Configuration Address Low Byte

Bit	Field Name	Reset	R/W	Description
7:0	DMA0CFG[7:0]	0x00	R/W	The DMA channel 0 configuration address, low byte

DMA1CFGH (0xD3) - DMA Channel 1 - 4 Configuration Address High Byte

Bit	Field Name	Reset	R/W	Description
7:0	DMA1CFG[15:8]	0x00	R/W	The DMA channel 1 - 4 configuration address, high byte

DMA1CFGL (0xD2) - DMA Channel 1 - 4 Configuration Address Low Byte

Bit	Field Name	Reset	R/W	Description
7:0	DMA1CFG[7:0]	0x00	R/W	The DMA channel 1 - 4 configuration address, low byte

DMAIRQ (0xD1) - DMA Interrupt Flag

Bit	Field Name	Reset	R/W	Description	
7:5		0	R0	Not used	
4	DMAIF4	0	R/W0	DMA channel 4 interrupt flag.	
				0	Transfer count not reached
				1	Transfer count reached/interrupt pending
3	DMAIF3	0	R/W0	DMA channel 3 interrupt flag.	
				0	Transfer count not reached
				1	Transfer count reached/interrupt pending
2	DMAIF2	0	R/W0	DMA channel 2 interrupt flag.	
				0	Transfer count not reached
				1	Transfer count reached/interrupt pending
1	DMAIF1	0	R/W0	DMA channel 1 interrupt flag.	
				0	Transfer count not reached
				1	Transfer count reached/interrupt pending
0	DMAIF0	0	R/W0	DMA channel 0 interrupt flag.	
				0	Transfer count not reached
				1	Transfer count reached/interrupt pending

ENDIAN (0x95) - USB Endianess Control (CC1111Fx)

Bit	Field Name	Reset	R/W	Description	
7:2		0	R/W	Not used	
1	USBWLE	0	R/W	USB Write Endianess setting for DMA channel word transfers to USB.	
				0	Big Endian
				1	Little Endian
0	USBRLE	0	R/W	USB Read Endianess setting for DMA channel word transfers from USB.	
				0	Big Endian
				1	Little Endian

12.6 16-bit Timer, Timer 1

Timer 1 is an independent 16-bit timer which supports typical timer/counter functions such as input capture, output compare, and PWM functions. The timer has three independent capture/compare channels and uses one I/O pin per channel.

The features of Timer 1 are as follows:

- Three capture/compare channels
- Rising, falling, or any edge input capture
- Set, clear, or toggle output compare
- Free-running, modulo or up/down counter operation
- Clock prescaler for divide by 1, 8, 32, or 128
- Interrupt request generation on capture/compare and when reaching the terminal count value
- Capture triggered by radio
- DMA trigger function
- Delta-Sigma Modulator (DSM) mode

Note: In the following sections, an n in the register name represent the channel number 0, 1, or 2 if nothing else is stated

12.6.1 16-bit Timer Counter

The timer consists of a 16-bit counter that increments or decrements at each active clock edge. The frequency of the active clock edges is given by `CLKCON.TICKSPD` and `T1CTL.DIV`. `CLKCON.TICKSPD` is used to set the timer tick speed. The timer tick speed will vary from 203.125 kHz to 26 MHz for **CC1110Fx** and 187.5 kHz to 24 MHz for **CC1111Fx** (given the use of a 26 MHz or 48 MHz crystal respectively). Note that the clock speed of the system clock is not affected by the `TICKSPD` setting. The timer tick speed is further divided in Timer 1 by the prescaler value set by `T1CTL.DIV`. This prescaler value can be 1, 8, 32, or 128. Thus the lowest clock frequency used by Timer 1 is 1.587 kHz and the highest is 26 MHz when a 26 MHz crystal oscillator is used as system clock source (**CC1110Fx**). The lowest clock frequency used by Timer 1 is 1.465 kHz and the highest is 24 MHz for **CC1111Fx**. When the high speed RC oscillator is used as system clock source, the highest clock frequency used by Timer 1 is $f_{XOSC}/2$ for **CC1110Fx** and 12 MHz for **CC1111Fx**, given that the HS RCOSC has been calibrated.

The counter operates as either a free-running counter, a modulo counter, or as an up/down counter for use in centre-aligned PWM. It can also be used in DSM mode.

It is possible to read the 16-bit counter value through the two 8-bit SFRs; `T1CNTH` and `T1CNTL`, containing the high-order byte and low-order byte respectively. When the `T1CNTL` register is read, the high-order byte of the counter at that instant is buffered in `T1CNTH` so that the high-order byte can be read from `T1CNTH`. Thus `T1CNTL` shall always be read first before reading `T1CNTH`.

All write accesses to the `T1CNTL` register will reset the 16-bit counter.

The counter may produce an interrupt request when the terminal count value (overflow) is reached (see Section 12.6.2.1 - 12.6.2.3). It is possible to start and halt the counter with `T1CTL` control register settings. The counter is started when a value other than 00 is written to `T1CTL.MODE`. If 00 is written to `T1CTL.MODE` the counter halts at its present value.

12.6.2 Timer 1 Operation

In general, the control register `T1CTL` is used to control the timer operation. The various modes of operation are described in the following three sections.

12.6.2.1 Free-running Mode

In free-running mode the counter starts from 0x0000 and increments at each active clock edge. When the counter reaches the terminal count value 0xFFFF (overflow), the counter is loaded with 0x0000 on the next timer tick and continues incrementing its value as shown in Figure 29. When 0xFFFF is reached, the `T1CTL.OVFIF` flag is set. The `IRCON.T1IF` flag is only asserted if the corresponding interrupt mask bit `TIMIF.OVFIM` is set. An interrupt request is generated when both `TIMIF.OVFIM` and `IEN1.T1EN` are set to 1. The free-running mode can be used to generate independent time intervals and output signal frequencies.

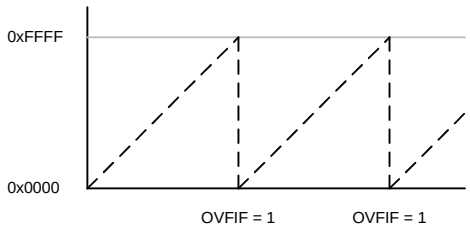

Figure 29: Free-running Mode

12.6.2.2 Modulo Mode

In modulo mode the counter starts from 0x0000 and increments at each active clock edge. When the counter reaches the terminal count value `T1CC0` (overflow), held in the registers `T1CC0H:T1CC0L`, the counter is loaded with 0x0000 on the next timer tick and continues incrementing its value as shown in Figure 30. When `T1CC0` is reached, the `T1CTL.OVFIF` flag is set. The `IRCON.T1IF` flag is only asserted if the corresponding interrupt mask bit `TIMIF.OVFIM` is set. An interrupt request is generated when both `TIMIF.OVFIM` and `IEN1.T1EN` are set to 1. The modulo mode can be used for applications where a period other than 0xFFFF is required.

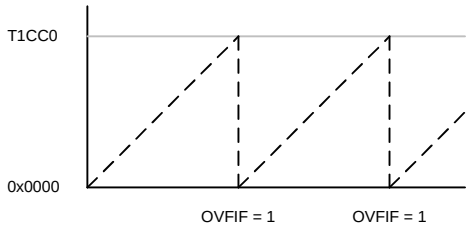

Figure 30: Modulo Mode

12.6.2.3 Up/Down Mode

In up/down mode the counter starts from 0x0000 and increments at each active clock edge. When the counter value matches the terminal count value `T1CC0`, held in the registers `T1CC0H:T1CC0L`, the counter counts down until 0x0000 is reached and it starts counting up again as shown in Figure 31. When 0x0000 is reached, the `T1CTL.OVFIF` flag is set. The `IRCON.T1IF` flag is only asserted if the corresponding interrupt mask bit `TIMIF.OVFIM` is set. An interrupt request is generated when both `TIMIF.OVFIM` and `IEN1.T1EN` are set to 1. The up/down mode can be used when symmetrical output pulses are required with a period other than 0xFFFF, and therefore allows implementation of centre-aligned PWM output applications.

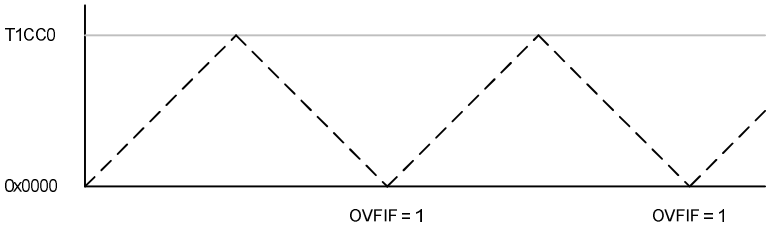

Figure 31: Up/Down Mode

12.6.3 Channel Mode Control

The channel mode is set with each channel's control and status register `T1CCTLn`. The settings include input capture and output compare modes.

Note: Before an I/O pin can be used by the timer, the required I/O pin must be configured as a Timer 1 peripheral pin as described in Section 12.4.6 on Page 91 .

12.6.4 Input Capture Mode

When a channel is configured as an input capture channel, the I/O pin associated with that channel, is configured as an input. After the timer has been started, a rising edge, falling edge or any edge on the input pin will trigger a capture of the 16-bit counter contents into the associated capture register. Thus the timer is able to capture the time when an external event takes place.

The channel input pin is synchronized to the internal system clock. Thus pulses on the input pin must have a minimum duration greater than the system clock period.

The contents of the 16-bit capture register can be read from registers `T1CCnH:T1CCnL`.

When the capture takes place, the interrupt flag for the appropriate channel (`T1CTL.CH0IF`, `T1CTL.CH1IF`, or `T1CTL.CH2IF` for channel 0, 1, and 2 respectively) is asserted. The `IRCON.T1IF` flag is only asserted if the corresponding interrupt mask bit `T1CCTL0.IM`, `T1CCTL1.IM`, or `T1CCTL2.IM` is set to 1. An interrupt request is generated if the corresponding interrupt mask bit is set together with `IEN1.T1EN`.

12.6.4.1 RF Event Capture

Each timer channel may be configured so that the RF events associated with the RF interrupt (interrupt #16) will trigger a capture instead of the normal input pin capture. This is done by setting `T1CCTLn.CPSEL=1`. When this configuration is chosen, the RF event(s) enabled by `RFIM` (see Section 13.3.1 on Page 187) will trigger a capture. This way the timer can be used to capture a value when e.g. a start of frame delimiter (SFD) is detected.

> *Note: When using an RF event to trigger a capture, both* `CLKCON.CLKSPD` *and* `CLKCON.TICKSPD` *must be set to 000.*

12.6.5 Output Compare Mode

In output compare mode the I/O pin associated with a channel is set as an output. After the timer has been started, the contents of the counter are compared with the contents of the channel compare register `T1CCnH:T1CCnL`. If the compare register equals the counter contents, the output pin is set, reset, or toggled according to the compare output mode setting of `T1CCTLn.CMP`. Note that all edges on output pins are glitch-free when operating in a given output compare mode. Writing to the compare register `T1CCnL` is buffered so that a value written to `T1CCnL` does not take effect until the corresponding high order register, `T1CCnH` is written. For output compare modes 0 - 2, a new value written to the compare register `T1CCnH:T1CCnL` takes effect after the registers have been written. For other output compare modes the new value written to the compare register takes effect when the timer reaches 0x0000.

Note that channel 0 has fewer output compare modes than channel 1 and 2 because `T1CC0H:T1CC0L` has a special function in modes 5 and 6, meaning these modes would not be useful for channel 0.

When a compare occurs, the interrupt flag for the appropriate channel (`T1CTL.CH0IF`, `T1CTL.CH1IF`, or `T1CTL.CH2IF` for channel 0, 1, and 2 respectively) is asserted. The `IRCON.T1IF` flag is only asserted if the corresponding interrupt mask bit `T1CCTL0.IM`, `T1CCTL1.IM`, or `T1CCTL2.IM` is set to 1. An interrupt request is generated if the corresponding interrupt mask bit is set together with `IEN1.T1EN`. When operating in up-down mode, the interrupt flag for channel 0 is set when the counter reaches 0x0000 instead of when a compare occurs.

Examples of output compare modes in various timer modes are given in Figure 32, Figure 33, and Figure 34.

Edge-aligned: PWM output signals can be generated using the timer modulo mode and channels 1 and 2 in output compare mode 5 or 6 (defined by `T1CCTLn.CMP` bits, where n is 1 or 2) as shown in Figure 33. The period of the PWM signal is determined by the setting in `T1CC0` and the duty cycle is determined by `T1CCn`.

PWM output signals can also be generated using the timer free-running mode and channels 1 and 2 in output compare mode 5 or 6 as shown in Figure 32. In this case the period of the PWM signal is determined by `CLKCON.TICKSPD` and the prescaler divider value in `T1CTL.DIV` and the duty cycle is determined by `T1CCn` (n = 1 or 2).

The polarity of the PWM signal is determined by whether output compare mode 5 or 6 is used.

For both modulo mode and free-running mode it is also possible to use compare mode 3 or 4 to generate a PWM output signal (see Figure 32 and Figure 33).

The polarity of the PWM signal is determined by whether output compare mode 3 or 4 is used.

Centre-aligned: PWM outputs can be generated when the timer up/down mode is selected. The channel output compare mode 3 or 4 (defined by `T1CCTLn.CMP` bits, where n is 1 or 2) is selected depending on required polarity of the PWM signal (see Figure 34). The period of the PWM signal is determined by `T1CC0` and the duty cycle for the channel output is determined by `T1CCn` (n = 1 or 2).

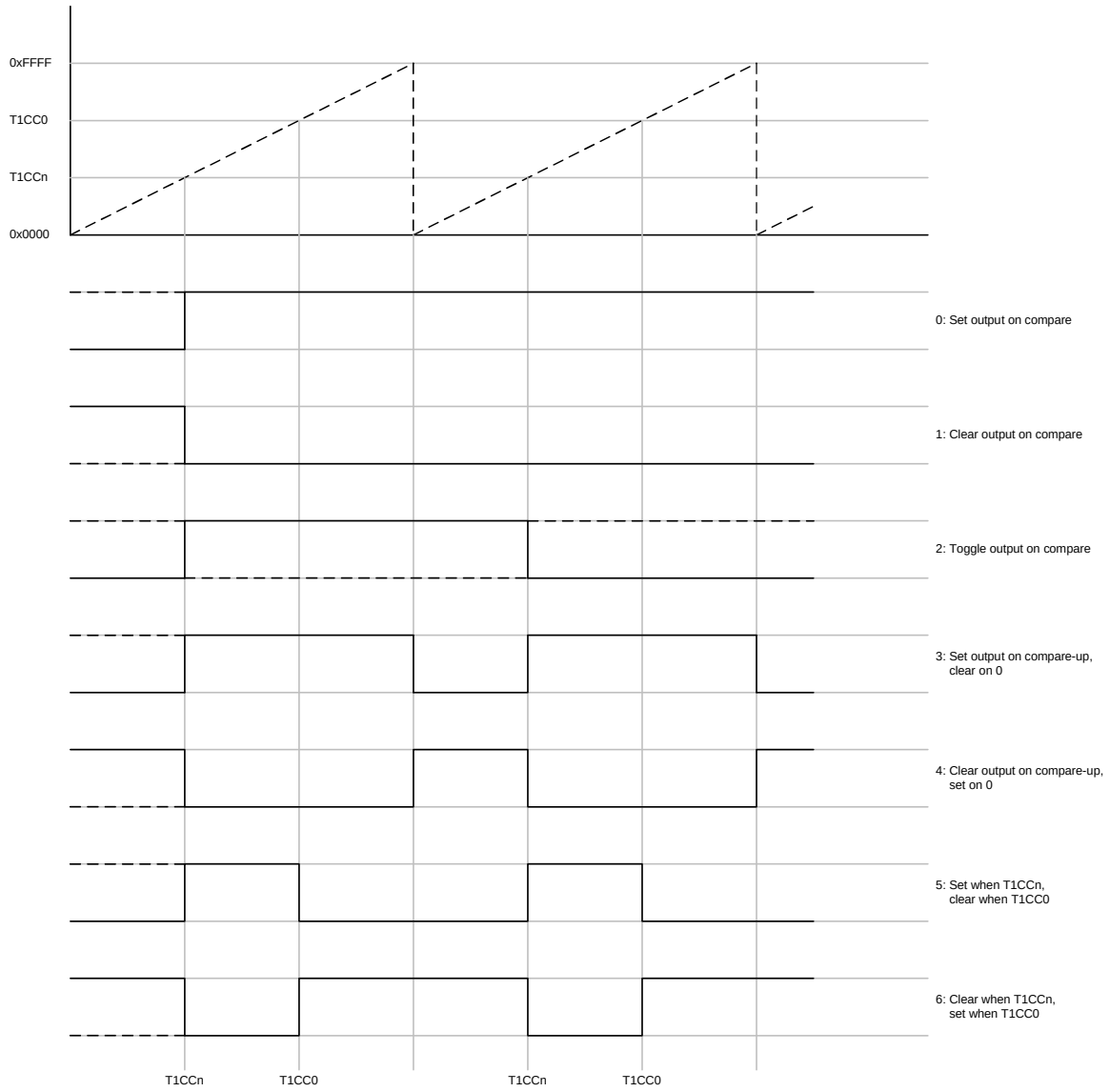

Figure 32: Output Compare Modes, Timer Free-running Mode

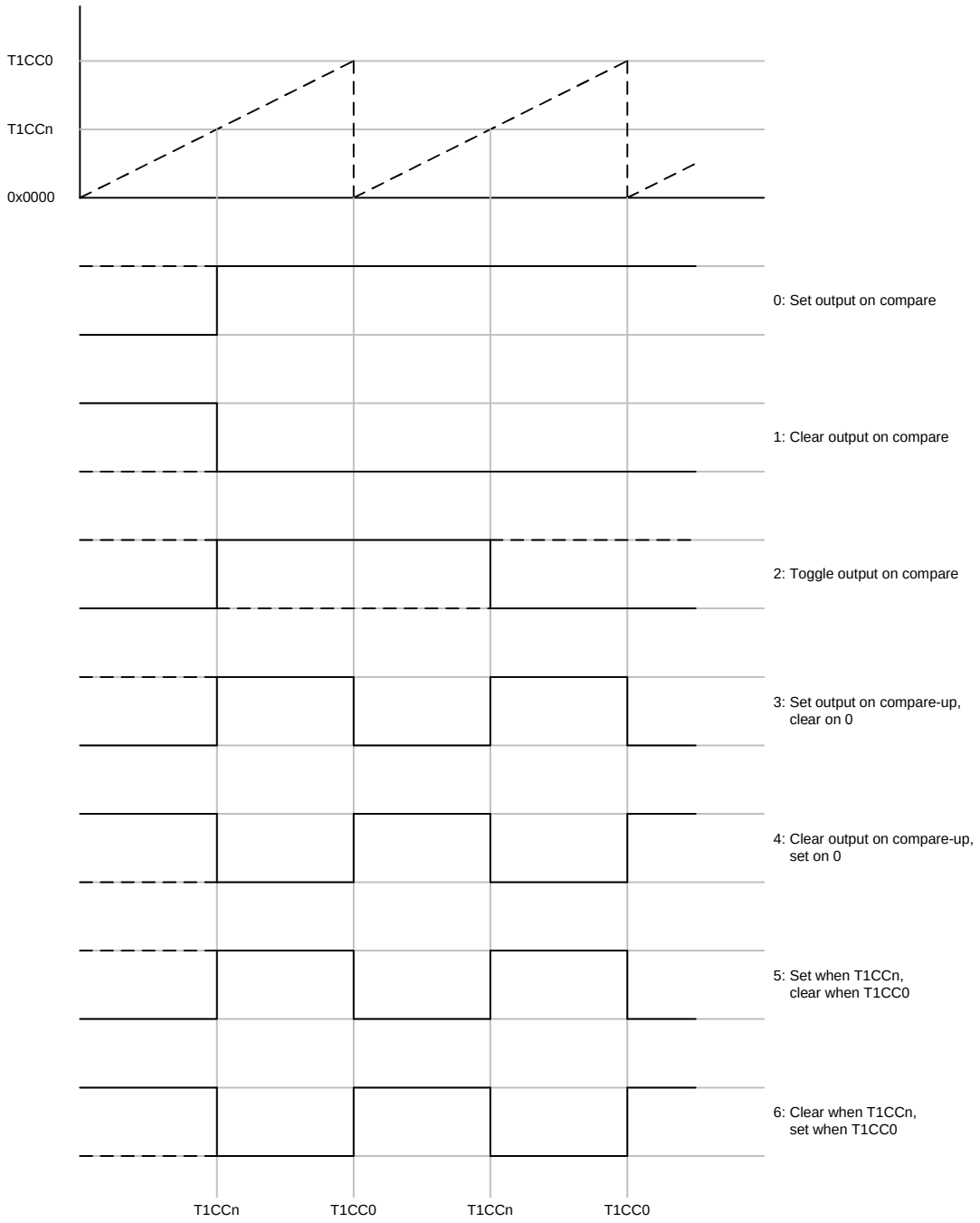

Figure 33: Output Compare Modes, Timer Modulo Mode

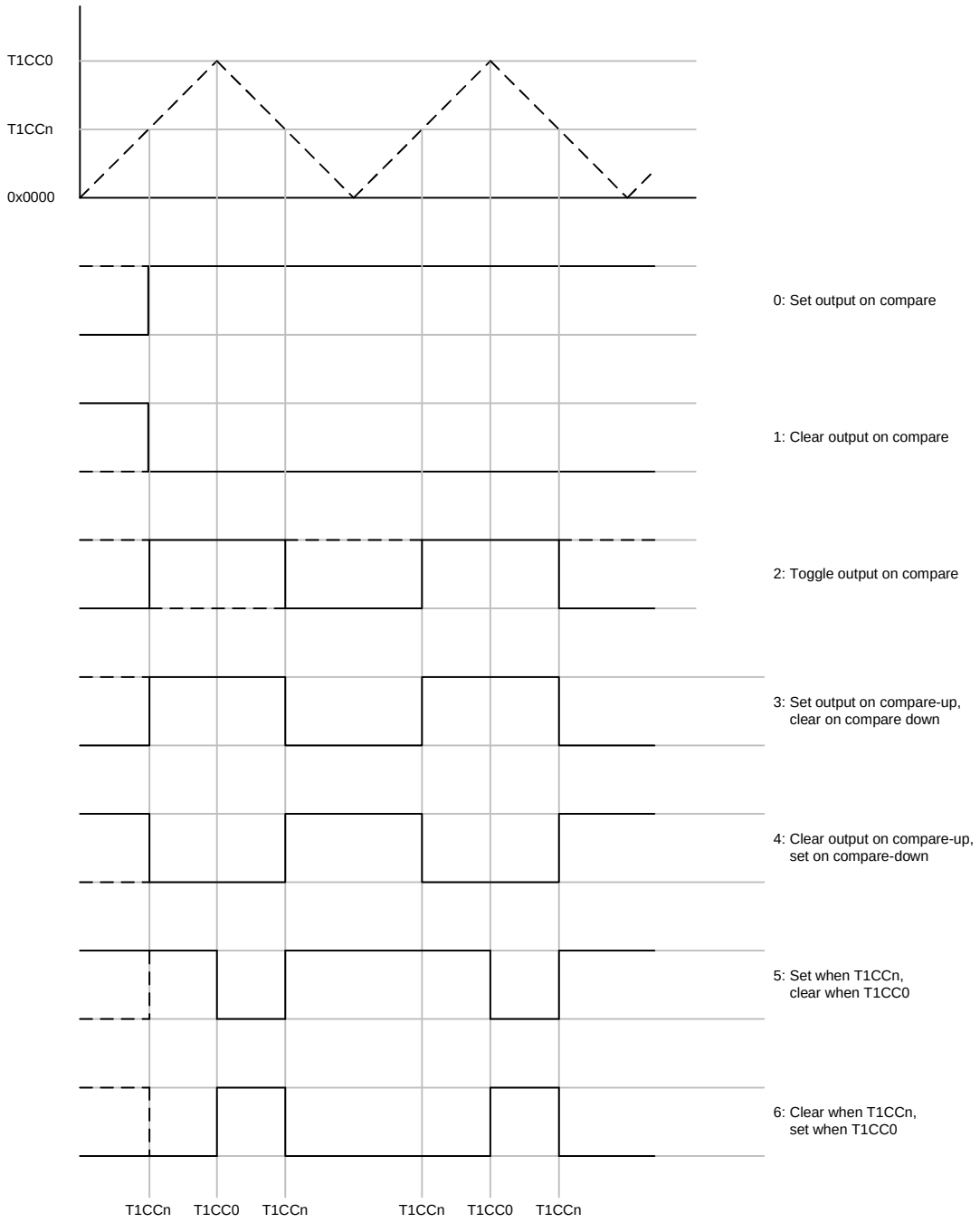

Figure 34: Output Modes, Timer Up/Down Mode

12.6.6 Timer 1 Interrupts

There is one interrupt vector assigned to the timer. This is T1 (Interrupt #9, see Table 39). The following timer events may generate an interrupt request:

- Counter reaches terminal count value (overflow) or turns around on zero
- Input capture event
- Output compare event

The register bits `T1CTL.OVFIF`, `T1CTL.CH0IF`, `T1CTL.CH1IF`, and `T1CTL.CH2IF` contains the interrupt flags for the terminal count value event (overflow), and the three channel compare/capture events, respectively. These flags will be asserted regardless off the channel n interrupt mask bit (`T1CCTLn.IM`). The CPU interrupt flag, `IRCON.T1IF` will only be asserted if one or more of the channel n interrupt mask bits are set to 1. An interrupt request is only generated when the corresponding interrupt mask bit is

set together with IEN1.T1EN. The interrupt mask bits are T1CCTL0.IM, T1CCTL1.IM, T1CCTL2.IM, and TIMIF.OVFIM. Note that enabling an interrupt mask bit will generate a new interrupt request if the corresponding interrupt flag is set.

When the timer is used in Free-running Mode or Modulo Mode the interrupt flags are set as follows:

- T1CTL.CH0IF, T1CTL.CH1IF, and T1CTL.CH2IF are set on compare/capture event
- T1CTL.OVFIF is set when counter reaches terminal count value (overflow)

When the timer is used in Up/Down Mode the interrupt flags are set as follows:

In compare mode:

- T1CTL.CH0IF and T1CTL.OVFIF are set when counter turns around on zero
- T1CTL.CH1IF and T1CTL.CH2IF are set on compare event

In capture mode:

- T1CTL.OVFIF is set when counter turns around on zero
- T1CTL.CH0IF, T1CTL.CH1IF, and T1CTL.CH2IF are set on capture event

I addition, the CPU interrupt flag, IRCON.T1IF will be asserted if the channel n interrupt mask bit (T1CCTLn.IM) is set to 1.

12.6.7 Timer 1 DMA Triggers

There are three DMA triggers associated with Timer 1, one for each channel. These are DMA triggers T1_CH0, T1_CH1 and T1_CH2, which are generated on timer capture/compare events as follows:

- T1_CH0 - Channel 0 capture/compare
- T1_CH1 - Channel 1 capture/compare
- T1_CH2 - Channel 2 capture/compare

12.6.8 DSM Mode

Timer 1 also contains a 1-bit Delta-Sigma Modulator (DSM) of second order that can be used to produce a mono audio output PWM signal. The DSM removes the need for high order external filtering required when using regular PWM mode.

The DSM operates at a fixed speed of either 1/4 or 1/8 of the timer tick speed set by CLKCON.TICKSPD. The DSM speed is set by T1CCTL1.MODE. The input samples are updated at a configurable sampling rate set by the terminal count value T1CC0.

An interpolator is used to match the sampling rate with the DSM update rate. This interpolator is of first order with a scaling compensation. The scaling compensation is due to variable gain defined by the difference in sampling speed and DSM speed. This interpolation mechanism can be disabled by setting T1CCTL1.CAP=10 or T1CCTL1.CAP=11, thus using a zeroth order interpolator.

In addition to the interpolator, a shaper can be used to account for differences in rise/fall times in the output signal. Also the shaper is enabled/disabled using the two CAP bits in the T1CCTL1 register. This shaper ensures a rising and a falling edge per bit and will thus limit the output swing to 1/8 to 7/8 of I/O VDD when the DSM operates at 1/8 of the timer tick speed or 1/4 to 3/4 of I/O VDD when the DSM operates at 1/4 of the timer tick speed.

The DSM is used as in PWM mode where the terminal count value T1CC0 defines the period/sampling rate. The DSM can not use the Timer 1 prescaler to further slow down the period.

Timer 1 must be configured to operate in modulo mode (T1CTL.MODE=10) and channel 0 must be configured to compare mode (T1CCTL0.MODE=1). The terminal count value T1CC0, held in the registers T1CC0H:T1CC0L, defines the sample rate. Table 53 shows some T1CC0 settings for different sample rates (CLKCON.TICKSPD=000).

Sample Rate	T1CC0H	T1CC0L
8 kHz @ 24 MHz	0x0B	0xB7
8 kHz @ 26 MHz	0x0C	0xB1
16 kHz @ 24 MHz	0x05	0xDB
16 kHz @ 26 MHz	0x06	0x59
48 kHz @ 24 MHz	0x01	0xF3
48 kHz @ 26 MHz	0x02	0x1D
64 kHz @ 24 MHz	0x01	0x76
64 kHz @ 26 MHz	0x01	0x96

Table 53: Channel 0 Period Setting for some Sampling Rates (`CLKCON.TICKSPD=000`)

Since the DSM starts immediately after DSM mode has been enabled by setting `T1CCTL1.CMP=111`, all configuration should have been performed prior to enabling DSM mode. Also, the Timer 1 counter should be cleared and started just before starting the DSM operation (all write accesses to the `T1CNTL` register will reset the 16-bit counter while writing a value other than 00 to `T1CTL.MODE` will start the counter). A simple procedure for setting up DSM mode should then be as follows:

1. Suspend timer 1 (`T1CTL.MODE=00`)
2. Clear timer counter by writing any value to `T1CNTL`, (`CNT=0x0000`)
3. Set the sample rate by writing to `T1CC0`.
4. Set Timer 1 channel 0 compare mode (`T1CCTL0.MODE=1`)
5. Load first sample if available (or zero if no sample available) into `T1CC1H:T1CC1L`.
6. Set timer operation to modulo mode (`T1CTL.MODE=10`)
7. Configure the DSM by setting the `MODE` and `CAP` fields of the `T1CCTL1` register.
8. Enable DSM mode (`T1CCTL1.CMP=111`)

On each Timer 1 IRQ or Timer 1 DMA trigger, write a new sample to the `T1CC1H:T1CC1L` registers. The least significant bits must be written to `T1CC1L` before the most significant bits are written to `T1CC1H`.

The samples written must be signed 2's complement values. The 2 least significant bits will always be treated as 0, thus the effective sample size is 14 bits.

12.6.9 Timer 1 Registers

This section describes the following Timer 1 registers:

- `T1CNTH` - Timer 1 Counter High
- `T1CNTL` - Timer 1 Counter Low
- `T1CTL` - Timer 1 Control and Status
- `T1CCTLn` - Timer 1 Channel n Capture/Compare Control
- `T1CCnH` - Timer 1 Channel n Capture/Compare Value High
- `T1CCnL` Timer 1 Channel n Capture/Compare Value Low

The `TIMIF` register is described in Section 12.9.8.

T1CNTH (0xE3) - Timer 1 Counter High

Bit	Field Name	Reset	R/W	Description
7:0	CNT[15:8]	0x00	R	Timer count high order byte. Contains the high byte of the 16-bit timer counter buffered at the time `T1CNTL` is read.

T1CNTL (0xE2) - Timer 1 Counter Low

Bit	Field Name	Reset	R/W	Description
7:0	CNT[7:0]	0x00	R/W	Timer count low order byte. Contains the low byte of the 16-bit timer counter. Writing anything to this register results in the counter being cleared to 0x0000.

T1CTL (0xE4) - Timer 1 Control and Status

Bit	Field Name	Reset	R/W	Description	
7	CH2IF	0	R/W 0	Timer 1 channel 2 interrupt flag	
				0	No interrupt pending
				1	Interrupt pending
6	CH1IF	0	R/W 0	Timer 1 channel 1 interrupt flag	
				0	No interrupt pending
				1	Interrupt pending
5	CH0IF	0	R/W 0	Timer 1 channel 0 interrupt flag	
				0	No interrupt pending
				1	Interrupt pending
4	OVFIF	0	R/W 0	Timer 1 counter overflow interrupt flag. Set when the counter reaches the terminal count value in free-running or modulo mode or when counter turns around on zero in up/down mode	
				0	No interrupt pending
				1	Interrupt pending
3:2	DIV[1:0]	00	R/W	Prescaler divider value. Generates the active clock edge used to update the counter as follows:	
				00	Tick frequency/1
				01	Tick frequency/8
				10	Tick frequency/32
				11	Tick frequency/128
				Note: The prescaler counter is not reset when writing these bits, hence one prescaler period may be needed before updated data is used.	
1:0	MODE[1:0]	00	R/W	Timer 1 mode select. The timer operating mode is selected as follows:	
				00	Operation is suspended
				01	Free-running, repeatedly count from 0x0000 to 0xFFFF
				10	Modulo, repeatedly count from 0x0000 to `T1CC0`
				11	Up/down, repeatedly count from 0x0000 to `T1CC0` and from `T1CC0` down to 0x0000

T1CCTL0 (0xE5) - Timer 1 Channel 0 Capture/Compare Control

Bit	Field Name	Reset	R/W	Description	
7	CPSEL	0	R/W	Timer 1 channel 0 capture select	
				0	Use normal capture input
				1	Use RF event(s) enabled in the `RFIM` register to trigger a capture
6	IM	1	R/W	Channel 0 interrupt mask	
				0	Interrupt disabled
				1	Interrupt enabled
5:3	CMP[2:0]	000	R/W	Channel 0 compare mode select. Selects action on output when timer value equals compare value in `T1CC0`	
				000	Set output on compare
				001	Clear output on compare
				010	Toggle output on compare
				011	Set output on compare-up, clear on 0 (clear on compare-down in up/down mode)
				100	Clear output on compare-up, set on 0 (set on compare-down in up/down mode)
				101	Reserved
				110	Reserved
				111	Reserved
2	MODE	0	R/W	Mode. Select Timer 1 channel 0 capture or compare mode	
				0	Capture mode
				1	Compare mode
1:0	CAP[1:0]	00	R/W	Channel 0 capture mode select	
				00	No capture
				01	Capture on rising edge
				10	Capture on falling edge
				11	Capture on both edges

T1CC0H (0xDB) - Timer 1 Channel 0 Capture/Compare Value High

Bit	Field Name	Reset	R/W	Description
7:0	T1CC0[15:8]	0x00	R/W	Timer 1 channel 0 capture/compare value, high order byte. Set the DSM sample rate in DSM mode

T1CC0L (0xDA) - Timer 1 Channel 0 Capture/Compare Value Low

Bit	Field Name	Reset	R/W	Description
7:0	T1CC0[7:0]	0x00	R/W	Timer 1 channel 0 capture/compare value, low order byte Set the DSM sample rate in DSM mode

T1CCTL1 (0xE6) - Timer 1 Channel 1 Capture/Compare Control

Bit	Field Name	Reset	R/W	Description		
7	CPSEL	0	R/W	Timer 1 channel 1 capture select		
				0	Use normal capture input	
				1	Use RF event(s) enabled in the `RFIM` register to trigger a capture	
6	IM	1	R/W	Channel 1 interrupt mask		
				0	Interrupt disabled	
				1	Interrupt enabled	
5:3	CMP[2:0]	000	R/W	Channel 1 compare mode select. Selects action on output when timer value equals compare value in `T1CC1`		
				000	Set output on compare	
				001	Clear output on compare	
				010	Toggle output on compare	
				011	Set output on compare-up, clear on 0 (clear on compare-down in up/down mode)	
				100	Clear output on compare-up, set on 0 (set on compare-down in up/down mode)	
				101	Set when equal to `T1CC1`, clear when equal to `T1CC0`	
				110	Clear when equal to `T1CC1`, set when equal to `T1CC0`	
				111	DSM mode enable	
2	MODE	0	R/W	`CMP` ≠ 111		`CMP` = 111
				Select Timer 1 channel 1 capture or compare mode		Set the DSM speed
				0	Capture mode	1/8 of timer tick speed
				1	Compare mode	1/4 of timer tick speed
1:0	CAP[1:0]	00	R/W		Channel 1 capture mode select (timer mode)	DSM interpolator and output shaping configuration (DSM mode)
				00	No capture	DSM interpolator and output shaping enabled
				01	Capture on rising edge	DSM interpolator enabled and output shaping disabled
				10	Capture on falling edge	DSM interpolator disabled and output shaping enabled
				11	Capture on both edges	DSM interpolator and output shaping disabled

T1CC1H (0xDD) - Timer 1 Channel 1 Capture/Compare Value High

Bit	Field Name	Reset	R/W	Description
7:0	T1CC1[15:8]	0x00	R/W	Timer 1 channel 1 capture/compare value, high order byte DSM data high order byte (DSM mode)

T1CC1L (0xDC) - Timer 1 Channel 1 Capture/Compare Value Low

Bit	Field Name	Reset	R/W	Description
7:0	T1CC1[7:0]	0x00	R/W	Timer 1 channel 1 capture/compare value, low order byte DSM data low order byte. The two least significant bits are not used. (DSM mode)

T1CCTL2 (0xE7) - Timer 1 Channel 2 Capture/Compare Control

Bit	Field Name	Reset	R/W	Description	
7	CPSEL	0	R/W	Timer 1 channel 2 capture select	
				0	Use normal capture input
				1	Use RF event(s) enabled in the `RFIM` register to trigger a capture
6	IM	1	R/W	Channel 2 interrupt mask	
				0	Interrupt disabled
				1	Interrupt enabled
5:3	CMP[2:0]	000	R/W	Channel 2 compare mode select. Selects action on output when timer value equals compare value in `T1CC2`	
				000	Set output on compare
				001	Clear output on compare
				010	Toggle output on compare
				011	Set output on compare-up, clear on 0 (clear on compare-down in up/down mode)
				100	Clear output on compare-up, set on 0 (set on compare-down in up/down mode)
				101	Set when equal to `T1CC2`, clear when equal to `T1CC0`
				110	Clear when equal to `T1CC2`, set when equal to `T1CC0`
				111	Not used
2	MODE	0	R/W	Mode. Select Timer 1 channel 2 capture or compare mode	
				0	Capture mode
				1	Compare mode
1:0	CAP[1:0]	00	R/W	Channel 2 capture mode select	
				00	No capture
				01	Capture on rising edge
				10	Capture on falling edge
				11	Capture on both edges

T1CC2H (0xDF) - Timer 1 Channel 2 Capture/Compare Value High

Bit	Field Name	Reset	R/W	Description
7:0	T1CC2[15:8]	0x00	R/W	Timer 1 channel 2 capture/compare value, high order byte

T1CC2L (0xDE) - Timer 1 Channel 2 Capture/Compare Value Low

Bit	Field Name	Reset	R/W	Description
7:0	T1CC2[7:0]	0x00	R/W	Timer 1 channel 2 capture/compare value, low order byte

12.7 MAC Timer (Timer 2)

The MAC timer is designed for slot timing operations used by the MAC layer in an RF protocol. The timer includes a highly tunable prescaler allowing the user to select a timer interval that equals, or is an integer fraction of, a transmission slot.

- 8-bit timer
- 18-bit tunable prescaler

12.7.1 Timer Operation

This section describes the operation of the timer.

The timer count can be read from the `T2CT` SFR. At each active clock edge, the timer count is decremented by one. When the timer count reaches 0x00, the register bit `T2CTL.TEX` is set to 1. When `T2CTL.TIG=0`, the timer will not wrap around when the timer count reaches 0x00. When `T2CTL.TIG=1`, timer count will wrap around and start counting down from 0xFF.

If `T2CTL.INT=1`, `IRCON.T2IF` will also be asserted when `T2CTL.TEX` is set to 1. An interrupt request will be generated if both `T2CTL.INT` and `IEN1.T2IE` are set to 1.

When a new value is written to the timer count register, `T2CT`, this value is stored in the counter immediately. If an active clock edge and a write to `T2CT` occur at the same time, the written value will be decremented before it is stored.

The 18 bit prescaler is controlled by:

- Timer tick speed (`CLKCON.TICKSPD`)
- `T2CTL.TIP`
- Prescaler value (`T2PR`)

All events in timer 2 are aligned to timer tick speed given by `CLKCON.TICKSPD`. `T2CTL.TIP` defines how fast the prescaler counter counts up towards its maximum value where it is reset and starts over again. The prescaler value, `T2PR`, defines the 8 MSB of the 18 bit counter and thus set the maximum value.

The timer 2 interval / time slot, T, can be given as:

T = `T2PR` Val(`T2CTL.TIP`)/ timer tick speed,

where the function Val(x) is set by `T2CTL.TIP` and defined as

Val(00) = 64

Val(01) = 128

Val(10) = 256

Val(11) = 1024

Example:

`T2PR` = 0x09

`T2CTL.TIP` = 10

`CLKCON.TICKSPD` = 101 (812.5 kHz @ when f_{xosc} = 26 MHz)

$T = 9 \cdot 256 / 812.5\ \text{kHz} = 2.84 \cdot 10^{-3}\ \text{s}$

12.7.2 Timer 2 DMA Trigger

There is one DMA trigger associated with Timer 2. This is the DMA trigger T2_OVFL, which is generated when `T2CTL.TEX` is set to 1.

12.7.3 Timer 2 Registers

The SFRs associated with Timer 2 are listed in this section. These registers are the following:

- `T2CTL` - Timer 2 Control
- `T2PR` - Timer 2 Prescaler
- `T2CT` - Timer 2 Count

Note: These registers will be in their reset state when returning to active mode from PM2 and PM3.

T2CTL (0x9E) - Timer 2 Control

Bit	Field Name	Reset	R/W	Description	
7		0	R/W 0	Reserved	
6	TEX	0	R/W 0	This bit is set to 1 when the timer count reaches 0x00. Writing a 1 to this bit has no effect	
5		0	R/W	Reserved. Always set to 0.	
4	INT	0	R/W	Timer 2 Interrupt enable	
				0	Interrupt disable
				1	Interrupt enable
3		0	R/W	Reserved. Always set to 0	
2	TIG	0	R/W	Tick generator mode	
				0	Tick generator is running when T2CT not equal to 0x00. The tick generator will always start running form its null state.
				1	Tick generator is in free-running mode. If it is not already running it will start from its null state when this bit is set to 1
1:0	TIP[1:0]	00	R/W	This value is used to calculate the timer 2 interval / time slot, T T = T2PR · Val(T2CTL.TIP)/ timer tick speed,	
				00	64
				01	128
				10	256
				11	1024

T2CT (0x9C) - Timer 2 Count

Bit	Field Name	Reset	R/W	Description
7:0	CNT[7:0]	0x00	R/W	Timer count. Contents of 8-bit counter.

T2PR (0x9D) - Timer 2 Prescaler

Bit	Field Name	Reset	R/W	Description
7:0	PR[7:0]	0x00	R/W	Timer prescaler multiplier. 0x00 is interpreted as 256

12.8 Sleep Timer

The Sleep Timer is used to control when the **CC1110Fx/CC1111Fx** exits from PM{0 - 2} and hence the Sleep Timer can be used to implement a wake up functionality which enables **CC1110Fx/CC1111Fx** to periodically wake up to active mode and listen for incoming RF packets.

> *Note: The Sleep timer should not be used in active mode*

12.8.1 Sleep Timer Operation

This section describes the operation of the timer.

> *Note: In this section of the document, f_{Ref} is used to denote the reference frequency for the synthesizer.*
> *For* **CC1110Fx** $f_{ref}=f_{XOS}$ *and for*
> **CC1111Fx**, $f_{ref} = \frac{f_{XOSC}}{2}$
> *When referring to the low power RCOSC, calibrated values are assumed*

The Sleep Timer consists of a 31-bit counter. The appropriate bits of this counter are selected according to a resolution setting determined by the `WORCTRL.WOR_RES` register bits. The Sleep Timer is either clocked by the 32.768 kHz crystal oscillator or by the low power RC oscillator (f_{ref} / 750). The timer can only be used in PM0, PM1, and PM2.

The Sleep Timer has a programmable timing event called Event 0. While in PM0, PM1, or PM2, reaching Event 0 will make the **CC1110Fx/CC1111Fx** enter active mode.

The time between two consecutive Event 0's (t_{Event0}) is programmed with a mantissa value given by `WOREVT1.EVENT0` and `WOREVT0.EVENT0`, and an exponent value set by `WORCTRL.WOR_RES`. When using the low power RC oscillator to clock the Sleep Timer, t_{Event0} is given by:

$$t_{Event0} = \frac{750}{f_{ref}} \cdot EVENT0 \cdot 2^{5 \cdot WOR_RES}$$

If the 32.768 kHz crystal oscillator is used to clock the Sleep Timer, t_{Event0} is calculated as follows:

$$t_{Event0} = \frac{1}{32768} \cdot EVENT0 \cdot 2^{5 \cdot WOR_RES}$$

The time from the **CC1110Fx/CC1111Fx** enters PM2 until the next Event 0 is programmed to appear ($t_{SLEEPmin}$) should be larger than 11.08 ms when f_{ref} is 26 MHz and 12 ms when f_{ref} is 24 MHz (Sleep Timer clocked by the low power RC oscillator).

$$t_{SLEEP_{min}} = \frac{750}{f_{ref}} \cdot 384$$

When the Sleep Timer is clocked by the 32.768 kHz crystal oscillator, $t_{SLEEPmin}$ = 11.72 ms (384/32768).

12.8.2 Sleep Timer and Power Modes

Entering PM{0 - 2} and/or updating `EVENT0` and has to be aligned to a positive edge on the 32 kHz clock source. The following code examples should be used in order to update `EVENT0` and/or entering PM{0 - 2} correctly:

Please note that the update rate of the `WORTIME0` register will depend on the Sleep Timer resolution, configured through `WORCTRL.WOR_RES`.

```
// Alignment of entering PM{0 – 2} to a positive edge on the 32 kHz clock source
char temp = WORTIME0;
while(temp == WORTIME0);              // Wait until a positive 32 kHz edge
PCON |= 0x01;                         // Enter PM{0 – 2}

// Alignment of updating EVENT0 to a positive edge on the 32 kHz clock source
char temp = WORTIME0;
while(temp == WORTIME0);              // Wait until a positive 32 kHz edge
WOREVT1 = desired event0 >> 8;        // Set EVENT0, high byte
WOREVT0 = desired event0;             // Set EVENT0, low byte

// Alignment of both updating EVENT0 and entering PM{0 - 2}to a positive edge
// on the 32 kHz clock source
char temp = WORTIME0;
while(temp == WORTIME0);              // Wait until a positive 32 kHz edge
WOREVT1 = desired event0 >> 8;        // Set EVENT0, high byte
WOREVT0 = desired event0;             // Set EVENT0, low byte
PCON |= 0x01:                         // Enter PM{0 – 2}
```

If EVENT0 is changed to a value lower than the current counter value, WORCTRL.WOR_RESET has to be asserted first to reset the timer. The assertion of WORCTRL.WOR_RESET must be followed by two positive edges on the 32 kHz clock source. The code below shows how to reset the Sleep Timer in combination with updating EVENT0 and/or entering PM{0 - 2}.

```
// Reset timer and enter PM{0 – 2}
WORCTRL |= 0x04;                        // Reset Sleep Timer
char temp = WORTIME0;
while(temp == WORTIME0);                // Wait until a positive 32 kHz edge
temp = WORTIME0;
while(temp == WORTIME0);                // Wait until a positive 32 kHz edge
PCON |= 0x01;                           // Enter PM{0 – 2}

// Reset timer and update EVENT0
WORCTRL |= 0x04;                        // Reset Sleep Timer
char temp = WORTIME0;
while(temp == WORTIME0);                // Wait until a positive 32 kHz edge
temp = WORTIME0;
while(temp == WORTIME0);                // Wait until a positive 32 kHz edge
WOREVT1 = desired event0 >> 8;          // Set EVENT0, high byte
WOREVT0 = desired event0;               // Set EVENT0, low byte

// Reset timer, update EVENT0, and enter PM{0 – 2}
WORCTRL |= 0x04;                        // Reset Sleep Timer
char temp = WORTIME0;
while(temp == WORTIME0);                // Wait until a positive 32 kHz edge
temp = WORTIME0;
while(temp == WORTIME0);                // Wait until a positive 32 kHz edge
WOREVT1 = desired event0 >> 8;          // Set EVENT0, high byte
WOREVT0 = desired event0;               // Set EVENT0, low byte
PCON |= 0x01;                           // Enter PM{0 – 2}
```

12.8.3 Low Power RC Oscillator and Timing

This section applies to using the low power RC oscillator as clock source for the Sleep Timer.

The frequency of the low-power RC oscillator, which can be used as clock source for the Sleep Timer, varies with temperature and supply voltage. In order to keep the frequency as accurate as possible, the RC oscillator will be calibrated whenever possible, which is when the high speed crystal oscillator is running and the chip is in active mode or PM0. When the chip goes to PM1 or PM2, the RC oscillator will use the last valid calibration result. The frequency of the low power RC oscillator is therefore locked to f_{ref} / 750.

12.8.4 Sleep Timer Interrupt

When Event 0 occurs, the WORIRQ.EVENT0_FLAG bit will be asserted. If the corresponding mask bit, EVENT0_MASK, is set in the WORIRQ register, the CPU interrupt flag IRCON.STIF will also be asserted in addition to the interrupt flag in WORIRQ. If IEN0.STIE=1 when IRCON.STIF is asserted, and ST interrupt request will be generated.

> *Note: All port interrupts are blocked when SLEEP.MODE≠00*

12.8.5 Sleep Timer DMA Trigger

There is one DMA trigger associated with the Sleep Timer. This is the DMA trigger ST, which is generated when Event 0 occurs.

12.8.6 Sleep Timer Registers

This section describes the SFRs associated with the Sleep Timer.

WORTIME0 (0xA5) - Sleep Timer Low Byte

Bit	Field Name	Reset	R/W	Description
7:0	WORTIME[7:0]	0x00	R	8 LSB of the16 bits selected from the 31-bit Sleep Timer according to the setting of WORCTRL.WOR_RES[1:0]

WORTIME1 (0xA6) - Sleep Timer High Byte

Bit	Field Name	Reset	R/W	Description
7:0	WORTIME[15:8]	0x00	R	8 MSB of the16 bits selected from the 31-bit Sleep Timer according to the setting of WORCTRL.WOR_RES[1:0]

WOREVT1 (0xA4) - Sleep Timer Event0 Timeout High

Bit	Field Name	Reset	R/W	Description	
7:0	EVENT0[15:8]	0x87	R/W	High byte of Event 0 timeout register	
				Sleep Timer clocked by low power RCOSC	Sleep Timer clocked by 32.768 kHz crystal oscillator
				$t_{Event0} = \frac{750}{f_{ref}} \cdot EVENT0 \cdot 2^{5 \cdot WOR_RES}$	$t_{Event0} = \frac{1}{32768} \cdot EVENT0 \cdot 2^{5 \cdot WOR_RES}$

WOREVT0 (0xA3) - Sleep Timer Event0 Timeout Low

Bit	Field Name	Reset	R/W	Description
7:0	EVENT0[7:0]	0x6B	R/W	Low byte of Event 0 timeout register

WORCTRL (0xA2) - Sleep Timer Control

Bit	Field Name	Reset	R/W	Description		
7		-	R0	Not used		
6:4		111	R/W	Reserved. Always write 000		
3		-	R0	Not used		
2	WOR_RESET	0	R0/W1	Reset timer. The timer will be reset to 4.		
1:0	WOR_RES[1:0]	00	R/W	Sleep Timer resolution Controls the resolution and maximum timeout for the Sleep Timer. Adjusting the resolution does not affect the clock cycle counter:		
				Setting	Resolution (1 LSB)	Bits selected from the 31-bit Sleep Timer
				00	1 period	15:0
				01	2^5 periods	20:5
				10	2^{10} periods	25:10
				11	2^{15} periods	30:15

WORIRQ (0xA1) - Sleep Timer Interrupt Control

Bit	Field Name	Reset	R/W	Description	
7:6		00	R0		
5		0	R/W	Reserved. Always write 0	
4	EVENT0_MASK	0	R/W	Event 0 interrupt mask	
				0	Interrupt is disabled
				1	Interrupt is enabled
3:2		00	R0		
1		0	R/W0	Reserved	
0	EVENT0_FLAG	0	R/W0	Event 0 interrupt flag	
				0	No interrupt is pending
				1	Interrupt is pending

12.9 8-bit Timers, Timer 3 and Timer 4

Timer 3 and Timer 4 are two 8-bit timers which supports typical timer/counter functions such as output compare and PWM functions. The timers have two independent compare channels each and use one I/O pin per channel.

The features of Timer 3/4 are as follows:

- Two compare channels
- Set, clear, or toggle output compare
- Free-running, modulo, down, or up/down counter operation
- Clock prescaler for divide by 1, 2, 4, 8, 16, 32, 64, 128
- Interrupt request generation on compare and when reaching the terminal count value
- DMA trigger function

Note: In the following sections, an n in the register name represent the channel number 0 or 1 if nothing else is stated. An x in the register name refers to the timer number, 3 or 4

12.9.1 8-bit Timer Counter

Both timers consist of an 8-bit counter that increments or decrements at each active clock edge. The frequency of the active clock edges is given by `CLKCON.TICKSPD` and `TxCTL.DIV`. `CLKCON.TICKSPD` is used to set the timer tick speed. The timer tick speed will vary from 203.125 kHz to 26 MHz for **CC1110Fx** and 187.5 kHz to 24 MHz for **CC1111Fx** (given the use of a 26 MHz or 48 MHz crystal respectively). Note that the clock speed of the system clock is not affected by the `TICKSPD` setting. The timer tick speed is further divided in Timer 3/4 by the prescaler value set by `TxCTL.DIV`. This prescaler value can be 1, 2, 4, 8, 16, 32, 64, or 128. Thus the lowest clock frequency used by Timer 3/4 is 1.587 kHz and the highest is 26 MHz when a 26 MHz crystal oscillator is used as system clock source (**CC1110Fx**). The lowest clock frequency used by Timer 3/4 is 1.465 kHz and the highest is 24 MHz for **CC1111Fx**. When the high speed RC oscillator is used as system clock source, the highest clock frequency used by Timer 3/4 is $f_{XOSC}/2$ for **CC1110Fx** and 12 MHz for **CC1111Fx**, given that the HS RCOSC has been calibrated.

The counter operates as either a free-running counter, a modulo counter, a down counter, or as an up/down counter for use in centre-aligned PWM.

It is possible to read the 8-bit counter value through the SFR `TxCNT`.

Writing a 1 to `TxCTL.CLR` will reset the 8-bit counter.

The counter may produce an interrupt request when the terminal count value (overflow) is reached (see Section 12.9.3 - 12.9.3.3). It is possible to start and halt the counter with the `TxCTL.START` bit. The counter is started when a 1 is written to `TxCTL.START`. If a 0 is written to `TxCTL.START`, the counter halts at its present value.

12.9.2 Timer 3/4 Operation

In general, the control register `TxCTL` is used to control the timer operation. The timer modes are described in the following four sections.

12.9.3 Free-running Mode

In free-running mode the counter starts from 0x00 and increments at each active clock edge. When the counter reaches the terminal count value 0xFF (overflow), the counter is loaded with 0x00 on the next timer tick and continues incrementing its value as shown in Figure 35. When 0xFF is reached, the `TIMIF.TxOVFIF` flag is set. The `IRCON.TxIF` flag is only asserted if the corresponding interrupt mask bit `TxCTL.OVFIM` is set. An interrupt request is generated when both `TxCTL.OVFIM` and `IEN1.TxEN` are set to 1. The free-running mode can be used to generate independent time intervals and output signal frequencies.

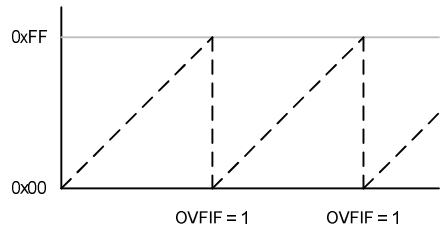

Figure 35: Free-running Mode

12.9.3.1 Modulo Mode

In modulo mode the counter starts from 0x00 and increments at each active clock edge. When the counter reaches the terminal count value `TxCC0` (overflow), the counter is loaded with 0x00 on the next timer tick and continues incrementing its value as shown in Figure 36. When `TxCC0` is reached, the `TIMIF.TxOVFIF` flag is set. The `IRCON.TxIF` flag is only asserted if the corresponding interrupt mask bit `TxCTL.OVFIM` is set. An interrupt request is generated when both `TxCTL.OVFIM` and `IEN1.TxEN` are set to 1. Modulo mode can be used for applications where a period other than 0xFF is required.

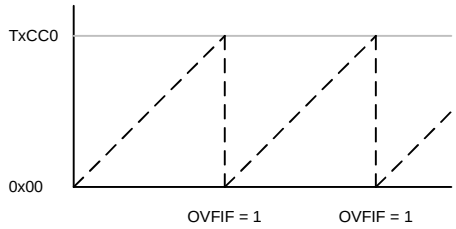

Figure 36: Modulo Mode

12.9.3.2 Down Mode

In down mode, after the timer has been started, the counter is loaded with the contents in `TxCC0`. The counter then counts down to 0x00 (terminal count value) and remains at 0x00 as shown in Figure 37. The flag `TIMIF.TxOVFIF` is set when 0x00 is reached. `IRCON.TxIF` is only asserted if the corresponding interrupt mask bit `TxCTL.OVFIM` is set. An interrupt request is generated when both `TxCTL.OVFIM` and `IEN1.TxEN` are set to 1. The timer down mode can generally be used in applications where an event timeout interval is required.

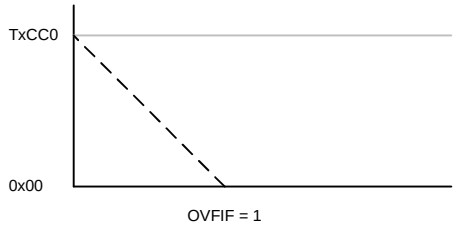

Figure 37: Down Mode

12.9.3.3 Up/Down Mode

In up/down mode the counter starts from 0x00 and increments at each active clock edge. When the counter value matches the terminal count value `TxCC0`, the counter counts down until 0x00 is reached and it starts counting up again as shown in Figure 38. When 0x00 is reached, the `TIMIF.TxOVFIF` flag is set. The `IRCON.TxIF` flag is only asserted if the corresponding interrupt mask bit `TxCTL.OVFIM` is set. An interrupt request is generated when both `TxCTL.OVFIM` and `IEN1.TxEN` are set to 1. The up/down mode can be used when symmetrical output pulses are required with a period other than 0xFF, and therefore allows implementation of centre-aligned PWM output applications.

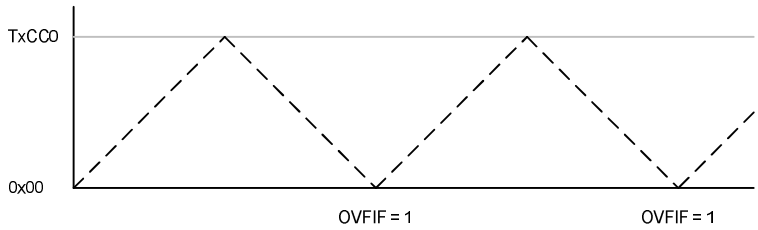

Figure 38: Up/Down Mode

12.9.4 Channel Mode Control

The channel mode is set with each channel's control and status register `TxCCTLn`.

> *Note: before an I/O pin can be used by the timer, the required I/O pin must be configured as a Timer 3/4 peripheral pin as described in section 12.4.6 on Page 64.*

12.9.5 Output Compare Mode

In output compare mode the I/O pin associated with a channel is set as an output. After the timer has been started, the contents of the counter are compared with the contents of the channel compare register `TxCCn`. If the compare register equals the counter contents, the output pin is set, reset, or toggled according to the compare output mode setting of `TxCCTLn.CMP`. Note that all edges on output pins are glitch-free when operating in a given compare output mode. Writing to the compare register `TxCC0` does not take effect on the output compare value until the counter value is 0x00. Writing to the compare register `TxCC1` takes effect immediately.

When a compare occurs, the interrupt flag for the appropriate channel (`TIMIF.TxCHnIF`) is asserted. The `IRCON.TxIF` flag is only asserted if the corresponding interrupt mask bit `TxCCTLn.IM` is set to 1. An interrupt request is generated if the corresponding interrupt mask bit is set together with `IEN1.TxEN`. When operating in up-down mode, the interrupt flag for channel 0 is set when the counter reaches 0x00 instead of when a compare occurs.

For simple PWM use, output compare modes 3 and 4 are preferred.

12.9.6 Timer 3 and 4 Interrupts

There is one interrupt vector assigned to each of the timers. These are T3 and T4 (interrupt #11 and #12, see Table 39). The following timer events may generate an interrupt request:

- Counter reaches terminal count value (overflow) or turns around on zero / reach zero
- Output compare event

The register bits `TIMIF.T3OVFIF`, `TIMIF.T4OVFIF`, `TIMIF.T3CH0IF`, `TIMIF.T3CH1IF`, `TIMIF.T4CH0IF`, and `TIMIF.T4CH1IF` contains the interrupt flags for the two terminal count value event (overflow), and the four channel compare events, respectively. These flags will be asserted regardless off the channel n interrupt mask bit (`TxCCTLn.IM`). The CPU interrupt flag, `IRCON.TxIF` will only be asserted if one or more of the channel n interrupt mask bits are set to 1. An interrupt request is only generated when the corresponding interrupt mask bit is set together with `IEN1.TxEN`. The interrupt mask bits are `T3CCTL0.IM`, `T3CCTL1.IM`, `T4CCTL0.IM`, `T4CCTL1.IM`, `T3CTL.OVFIM`, and `T4CTL.OVFIM`. Note that enabling an interrupt mask bit will generate a new interrupt request if the corresponding interrupt flag is set.

When the timer is used in Free-running Mode or Modulo Mode the interrupt flags are set as follows:

- `TIMIF.TxCH0IF` and `TIMIF.TxCH1IF` are set on compare event
- `TIMIF.TxOVFIF` is set when counter reaches terminal count value (overflow)

When the timer is used in Down Mode the interrupt flags are set as follows:

- `TIMIF.TxCH0IF` and `TIMIF.TxCH1IF` are set on compare event
- `TIMIF.TxOVFIF` is set when counter reaches zero

When the timer is used in Up/Down Mode the interrupt flags are set as follows:

- `TIMIF.TxCH0IF` and `TIMIF.TxOVFIF` are set when the counter turns around on zero
- `TIMIF.TxCH1IF` is set on compare event

In addition, the CPU interrupt flag, `IRCON.TxIF` will be asserted if the channel n interrupt mask bit (`TxCCTLn.IM`) is set to 1.

12.9.7 Timer 3 and Timer 4 DMA Triggers

There are two DMA triggers associated with Timer 3 and two DMA triggers associated with Timer 4. These are DMA triggers T3_CH0, T3_CH1, T4_CH0, and T4_CH1, which are generated on timer compare events as follows:

- T3_CH0: Timer 3 channel 0 compare
- T3_CH1: Timer 3 channel 1 compare
- T4_CH0: Timer 4 channel 0 compare
- T4_CH1: Timer 4 channel 1 compare

12.9.8 Timer 3 and 4 Registers

This section describes the following Timer 3 and Timer 4 registers:

- `T3CNT` - Timer 3 Counter
- `T3CTL` - Timer 3 Control
- `T3CCTLn` - Timer 3 Channel n Compare Control
- `T3CCn` - Timer 3 Channel n Compare Value
- `T4CNT` - Timer 4 Counter
- `T4CTL` - Timer 4 Control
- `T4CCTLn` - Timer 4 Channel n Compare Control
- `T4CCn` - Timer 4 Channel n Compare Value
- `TIMIF` - Timer 1/3/4 Interrupt Mask/Flag

T3CNT (0xCA) - Timer 3 Counter

Bit	Field Name	Reset	R/W	Description
7:0	CNT[7:0]	0x00	R	Timer count byte. Contains the current value of the 8-bit counter

T3CTL (0xCB) - Timer 3 Control

Bit	Field Name	Reset	R/W	Description	
7:5	DIV[2:0]	000	R/W	Prescaler divider value. Generates the active clock edge used to update the counter as follows:	
				000	Tick frequency /1
				001	Tick frequency /2
				010	Tick frequency /4
				011	Tick frequency /8
				100	Tick frequency /16
				101	Tick frequency /32
				110	Tick frequency /64
				111	Tick frequency /128
				Note: Changes to these bits has immediate effect on the frequency of the active clock edges.	
4	START	0	R/W	Start timer	
				0	Suspended
				1	Normal operation
3	OVFIM	1	R/W0	Overflow interrupt mask	
				0	Interrupt disabled
				1	Interrupt enabled
2	CLR	0	R0/W1	Clear counter. Writing a 1 resets the counter to 0x00. This bit will be 0 when returning from PM2 and PM3	
1:0	MODE[1:0]	00	R/W	Timer 3 mode select. The timer operating mode is selected as follows:	
				00	Free running, repeatedly count from 0x00 to 0xFF
				01	Down, count from `T3CC0` to 0x00
				10	Modulo, repeatedly count from 0x00 to `T3CC0`
				11	Up/down, repeatedly count from 0x00 to `T3CC0` and from `T3CC0` down to 0x00

T3CCTL0 (0xCC) - Timer 3 Channel 0 Compare Control

Bit	Field Name	Reset	R/W	Description	
7		-	R0	Not used	
6	IM	1	R/W	Channel 0 interrupt mask	
				0	Interrupt disabled
				1	Interrupt enabled
5:3	CMP[2:0]	000	R/W	Channel 0 compare output mode select. Specified action on output when timer value equals compare value in `T3CC0`	
				000	Set output on compare
				001	Clear output on compare
				010	Toggle output on compare
				011	Set output on compare-up, clear on 0 (clear on compare-down in up/down mode)
				100	Clear output on compare-up, set on 0 (set on compare-down in up/down mode)
				101	Set output on compare, clear on 0xFF
				110	Clear output on compare, set on 0x00
				111	Not used
2	MODE	0	R/W	Timer 3 channel 0 compare mode enable	
				0	Disable
				1	Enable
1:0		00	R/W	Reserved. Always write 00	

T3CC0(0xCD) - Timer 3 Channel 0 Compare Value

Bit	Field Name	Reset	R/W	Description
7:0	VAL[7:0]	0x00	R/W	Timer 3 channel 0 compare value

T3CCTL1 (0xCE) - Timer 3 Channel 1 Compare Control

Bit	Field Name	Reset	R/W	Description	
7		-	R0	Not used	
6	IM	1	R/W	Channel 1 interrupt mask	
				0	Interrupt disabled
				1	Interrupt enabled
5:3	CMP[2:0]	000	R/W	Channel 1 compare output mode select. Specified action on output when timer value equals compare value in `T3CC1`	
				000	Set output on compare
				001	Clear output on compare
				010	Toggle output on compare
				011	Set output on compare-up, clear on 0 (clear on compare-down in up/down mode)
				100	Clear output on compare-up, set on 0 (set on compare-down in up/down mode)
				101	Set output on compare, clear on `T3CC0`
				110	Clear output on compare, set on `T3CC0`
				111	Not used
2	MODE	0	R/W	Timer 3 channel 1 compare mode enable	
				0	Disable
				1	Enable
1:0		00	R/W	Reserved. Always write 00	

T3CC1 (0xCF) - Timer 3 Channel 1 Compare Value

Bit	Field Name	Reset	R/W	Description
7:0	VAL[7:0]	0x00	R/W	Timer 3 channel 1 compare value

T4CNT (0xEA) - Timer 4 Counter

Bit	Field Name	Reset	R/W	Description
7:0	CNT[7:0]	0x00	R	Timer count byte. Contains the current value of the 8-bit counter

T4CTL (0xEB) - Timer 4 Control

Bit	Field Name	Reset	R/W	Description	
7:5	DIV[2:0]	000	R/W	Prescaler divider value. Generates the active clock edge used to update the counter as follows:	
				000	Tick frequency /1
				001	Tick frequency /2
				010	Tick frequency /4
				011	Tick frequency /8
				100	Tick frequency /16
				101	Tick frequency /32
				110	Tick frequency /64
				111	Tick frequency /128
				Note: Changes to these bits has immediate effect on the frequency of the active clock edges.	
4	START	0	R/W	Start timer	
				0	Suspended
				1	Normal operation
3	OVFIM	1	R/W0	Overflow interrupt mask	
				0	Interrupt disabled
				1	Interrupt enabled
2	CLR	0	R0/W1	Clear counter. Writing a 1 resets the counter to 0x00. This bit will be 0 when returning from PM2 and PM3	
1:0	MODE[1:0]	00	R/W	Timer 4 mode select. The timer operating mode is selected as follows:	
				00	Free running, repeatedly count from 0x00 to 0xFF
				01	Down, count from `T4CC0` to 0x00
				10	Modulo, repeatedly count from 0x00 to `T4CC0`
				11	Up/down, repeatedly count from 0x00 to `T4CC0` and from `T4CC0` down to 0x00

T4CCTL0 (0xEC) - Timer 4 Channel 0 Compare Control

Bit	Field Name	Reset	R/W	Description	
7		-	R0	Not used	
6	IM	1	R/W	Channel 0 interrupt mask	
				0	Interrupt disabled
				1	Interrupt enabled
5:3	CMP[2:0]	000	R/W	Channel 0 compare output mode select. Specified action on output when timer value equals compare value in `T4CC0`	
				000	Set output on compare
				001	Clear output on compare
				010	Toggle output on compare
				011	Set output on compare-up, clear on 0 (clear on compare-down in up/down mode)
				100	Clear output on compare-up, set on 0 (set on compare-down in up/down mode)
				101	Set output on compare, clear on 0xFF
				110	Clear output on compare, set on 0x00
				111	Not used
2	MODE	0	R/W	Timer 4 channel 0 compare mode enable	
				0	Disable
				1	Enable
1:0		00	R/W	Reserved. Always write 00	

T4CC0 (0xED) - Timer 4 Channel 0 Compare Value

Bit	Field Name	Reset	R/W	Description
7:0	VAL[7:0]	0x00	R/W	Timer 4 channel 0 compare value

T4CCTL1 (0xEE) - Timer 4 Channel 1 Compare Control

Bit	Field Name	Reset	R/W	Description	
7		-	R0	Not used	
6	IM	1	R/W	Channel 0 interrupt mask	
				0	Interrupt disabled
				1	Interrupt enabled
5:3	CMP[2:0]	000	R/W	Channel 0 compare output mode select. Specified action on output when timer value equals compare value in `T4CC0`	
				000	Set output on compare
				001	Clear output on compare
				010	Toggle output on compare
				011	Set output on compare-up, clear on 0 (clear on compare-down in up/down mode)
				100	Clear output on compare-up, set on 0 (set on compare-down in up/down mode)
				101	Set output on compare, clear on `T4CC0`
				110	Clear output on compare, set on `T4CC0`
				111	Not used
2	MODE	0	R/W	Timer 4 channel 1 compare mode enable	
				0	Disable
				1	Enable
1:0		00	R/W	Reserved. Always write 00	

T4CC1 (0xEF) - Timer 4 Channel 1 Compare Value

Bit	Field Name	Reset	R/W	Description
7:0	VAL[7:0]	0x00	R/W	Timer 4 channel 1 compare value

TIMIF (0xD8) - Timers 1/3/4 Interrupt Mask/Flag

Bit	Field Name	Reset	R/W	Description	
7		-	R0	Not used	
6	OVFIM	1	R/W	Timer 1 overflow interrupt mask	
				0	Interrupt disabled
				1	Interrupt enabled
5	T4CH1IF	0	R/W 0	Timer 4 channel 1 interrupt flag. Writing a 1 has no effect	
				0	No interrupt is pending
				1	Interrupt is pending
4	T4CH0IF	0	R/W 0	Timer 4 channel 0 interrupt flag. Writing a 1 has no effect	
				0	No interrupt is pending
				1	Interrupt is pending
3	T4OVFIF	0	R/W 0	Timer 4 overflow interrupt flag. Writing a 1 has no effect	
				0	No interrupt is pending
				1	Interrupt is pending
2	T3CH1IF	0	R/W 0	Timer 3 channel 1 interrupt flag. Writing a 1 has no effect	
				0	No interrupt is pending
				1	Interrupt is pending
1	T3CH0IF	0	R/W 0	Timer 3 channel 0 interrupt flag. Writing a 1 has no effect	
				0	No interrupt is pending
				1	Interrupt is pending
0	T3OVFIF	0	R/W 0	Timer 3 overflow interrupt flag. Writing a 1 has no effect	
				0	No interrupt is pending
				1	Interrupt is pending

12.10 ADC

12.10.1 ADC Introduction

The ADC supports up to 12-bit analog-to-digital conversion. The ADC includes an analog multiplexer with up to eight individually configurable channels, reference voltage generator, and conversion results written to memory through DMA. Several modes of operation are available. All references to VDD applies to voltage on the pin AVDD.

The main features of the ADC are as follows:

- Selectable decimation rates which also sets the resolution (7 to 12 bits).
- Eight individual input channels, single-ended or differential (**CC1111Fx** has only six channels)
- Reference voltage selectable as internal, external single ended, external differential, or VDD.
- Interrupt request generation
- DMA triggers at end of conversions
- Temperature sensor input
- Battery measurement capability

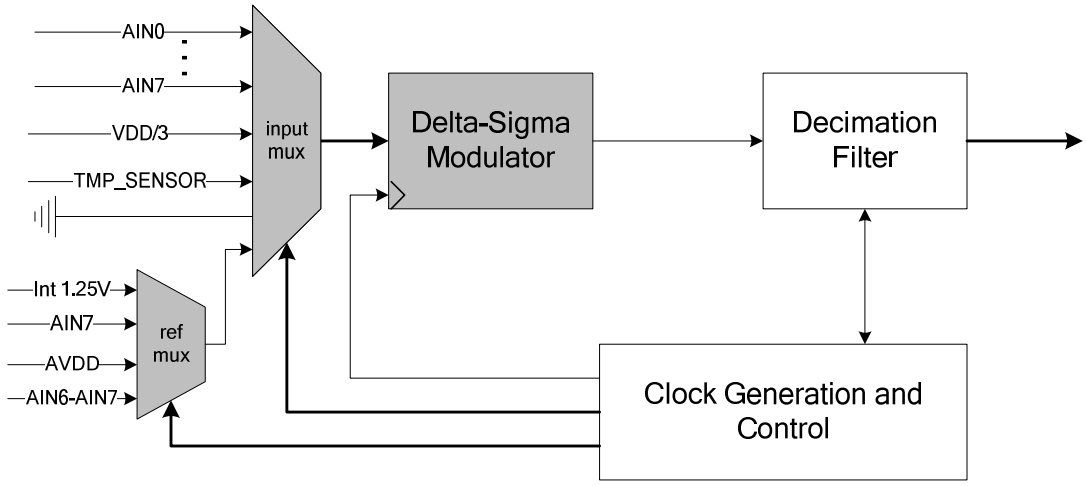

Figure 39: ADC Block Diagram

12.10.2 ADC Operation

This section describes the general setup and operation of the ADC and describes the usage of the ADC control and status registers accessed by the CPU.

12.10.2.1 ADC Core

The ADC is capable of converting an analog input into a digital representation with up to 12 bits resolution. The ADC uses a selectable positive reference voltage.

12.10.2.2 ADC Inputs

The signals on the P0 port pins can be used as ADC inputs.

> *Note: P0_6 and P0_7 do not exist on **CC1111Fx**, hence only six input channels are available (AIN0 - AIN5)*

To configure a P0 pin to be used as an ADC input the corresponding bit in the `ADCCFG` register must be set to 1. The default value in this register disables the ADC inputs. Please see Section 12.4.6.7 on Page 94 for more details on how to configure the ADC input pins. In the following these port pin will be referred to as the AIN0 - AIN7 pins. The ADC can be set up to automatically perform a sequence of conversions and optionally perform an extra conversion.

It is possible to configure the inputs as single-ended or differential inputs. In the case where differential inputs are selected, the differential inputs consist of the input pairs AIN0 - AIN1, AIN2 - AIN3, AIN4 - AIN5, and AIN6 - AIN7. Note that neither a negative supply, nor a supply larger than VDD (unregulated power) can be applied to these pins. It is the difference between the pairs that are converted in differential mode.

In addition to the input pins AIN0 - AIN7, the output of an on-chip temperature sensor can be selected as an input to the ADC for temperature measurements.

It is also possible to select a voltage corresponding to VDD/3 as an ADC input. This input allows the implementation of e.g. a battery monitor in applications where this feature is required.

12.10.2.3 ADC Conversion Sequences

The ADC will perform a sequence of conversions, and the results can be moved to memory (through DMA) without any interaction from the CPU.

The `ADCCON2.SCH` register bits are used to define an ADC conversion sequence from the ADC inputs. If some of the inputs in this sequence are not configured to be analog input signals in the `ADCCFG` register, these will be skipped. For differential inputs both input pins must be configured to be analog input signals.

- 0000 ≤ `ADCCON2.SCH` ≤ 0111: Single-ended inputs
- 1000 ≤ `ADCCON2.SCH` ≤ 1011: Differential inputs
- 1100 ≤ `ADCCON2.SCH` ≤ 1111: GND, internal voltage reference, temp. sensor, and VDD/3

When `ADCCON2.SCH` is set to a value less than 1000 a conversion sequence will contain a conversion from each ADC input, starting at AIN0 and ending at the input programmed in `ADCCON2.SCH`. When `ADCCON2.SCH` is set to a value ranging from 1000 to 1011, the sequence will start at the differential input pair (AIN0 - AIN1) and stop at the input pair given by `ADCCON2.SCH`. For even higher settings, only single conversions are performed. In addition to this sequence of conversions, the ADC can be programmed to perform a single conversion (see next section).

12.10.2.4 ADC Operating Modes

This section describes the operating modes and initialization of conversions.

The ADC has three control registers: `ADCCON1`, `ADCCON2`, and `ADCCON3`. These registers are used to configure the ADC and to report status.

The `ADCCON1.EOC` bit is a status bit that is set high when a conversion ends and cleared when `ADCH` is read.

The `ADCCON1.ST` bit is used to start a sequence of conversions. A sequence will start when this bit is set high, `ADCCON1.STSEL=11`, and no conversion is currently running. When the sequence is completed, this bit is automatically cleared.

The `ADCCON1.STSEL` bits select which event that will start a new sequence of conversions. The options which can be selected are rising edge on external pin P2_0, end of previous sequence, a Timer 1 channel 0 compare event, or `ADCCON1.ST` is 1.

`ADCCON2.SREF` is used to select the reference voltage. The reference voltage should only be changed when no conversion is running.

The `ADCCON2.SDIV` bits select the decimation rate (and thereby also the resolution and time required to complete a conversion and sample rate). The decimation rate should only be changed when no conversion is running.

The `ADCCON2.SCH` register bits are used to define an ADC conversion sequence.

The ADC can be programmed to perform a single conversion (single-ended, differential, GND, internal voltage reference, temperature sensor, or VDD/3). This is called an extra conversion and is controlled with the `ADCCON3` register. This conversion is triggered by writing to `ADCCON3`. If this register is written while the ADC is running, the conversion will take place as soon as the sequence has completed. If the register is written while the ADC is not running, the conversion will take place immediately after the `ADCCON3` register is updated.

The `ADCCON3` register controls which input to use, reference voltage, and decimation rate for the extra conversion. The coding of the register bits is exactly as for `ADCCON2`.

> *Note: If a sequence of conversions is started without setting any of the P0 pins as analog inputs, `ADCCON2.SCH` and `ADCCON1.EOC` will still be updated, as if the conversions had taken place.*

12.10.2.5 ADC Reference Voltage

The positive reference voltage for analog-to-digital conversions is selectable as either an internally generated 1.25 V voltage, VDD on the AVDD pin, an external voltage applied to the AIN7 input pin, or a differential voltage applied to the AIN6 - AIN7 inputs (AIN6 must have the highest input voltage). It is possible to select the reference voltage as the input to the ADC in order to perform a conversion of the reference voltage e.g. for calibration purposes. Similarly, it is possible to select the ground terminal GND as an input.

*Note: P0_6 and P0_7 do not exist on **CC1111Fx**, hence it is not possible to use external voltage reference for the ADC on the **CC1111Fx**.*

12.10.2.6 ADC Conversion Results

The digital conversion result is represented in two's complement form. For single ended configurations the result is always positive (the result is the difference between ground and the input signal AINn, where n is 0, 1, 2, …, 7) and will be a value between 0 and 2047. The maximum value is reached when the input amplitude is equal VREF, the selected voltage reference. For differential configurations the difference between two pin pairs are converted and this difference can be negatively signed. For 12-bit resolution the digital conversion result is 2047 when the analog input is equal to VREF, and the conversion result is –2048 when the analog input is equal to –VREF.

The digital conversion result is available in `ADCH` and `ADCL` when `ADCCON1.EOC` is set to 1. Note that the conversion result always resides in MSB section of `ADCH:ADCL`.

When reading the `ADCCON2.SCH` bits, the number returned will indicate what the last conversion was. Notice that when the value written to `ADCCON2.SCH` is less than 1100, the number returned will be the number written + 1. For example, after a sequence of conversions from AIN0 to AIN4 has completed, `ADCCON2.SCH` will be read as 0101, while after a single conversion of the temperature sensor has completed, the register field will be read as 1110 (same as the value written to it). If an extra conversion has been initiated by writing to `ADCCON3.ECH`, `ADCCON2.SCH` will be updated, after the conversion has completed, with the same value as written to `ADCCON3.ECH`, even if this value was less than 1100.

12.10.2.7 ADC Conversion Timing

The high speed crystal oscillator should be selected as system clock when the ADC is used and `CLKCON.CLKSPD` should be 000. The ADC runs on a clock which is the system clock divided by 6 to give a 4.33/4 MHz ADC clock. Both the delta-sigma modulator and the decimation filter use the ADC clock for their calculations. Using other frequencies will affect the results, and conversion time. All data presented within this data sheet assume the use of the high speed crystal oscillator.

The time required to perform a conversion depends on the selected decimation rate. When, for instance, the decimation rate is set to 128, the decimation filter uses exactly 128 ADC clock periods to calculate the result. When a conversion is started, the input multiplexer is allowed 16 ADC clock periods to settle in case the channel has been changed since the previous conversion. The 16 clock cycles settling time applies to all decimation rates. This means that the conversion time, T_{conv}, is given by:

T_{conv} = (decimation rate + 16) x T where

0.22 µs ≤ T ≤ 0.23 µs *for* **CC1110Fx**, depending on the frequency of the high speed crystal oscillator

T = 0.25 µs for **CC1111Fx**

12.10.2.8 ADC Interrupts

The ADC will only generate an interrupt when an extra conversion has completed.

12.10.2.9 ADC DMA Triggers

DMA triggers 20 - 28 are associated with single-ended or differential conversion sequences (`ADCCON2.SCH` ≤ 1100). The ADC will generate a DMA trigger event when a new sample is ready from a conversion in the sequence. The same is the case if a single conversion is completed (`ADCCON2.SCH` ≥ 1100). Be aware that DMA trigger number 27 and 28 are shared with the I^2S module.

In addition there is one DMA trigger, ADC_CHALL, which is active when new data is ready from any of the conversions in the ADC conversion sequence and from the single conversion defined by `ADCCON2.SCH`. A completion of an extra conversion will not generate a trigger event.

The DMA triggers are listed in Table 51 on age 107.

12.10.3 ADC Registers

This section describes the ADC registers.

ADCL (0xBA) - ADC Data Low

Bit	Field Name	Reset	R/W	Description
7:4	ADC[3:0]	0000	R	Least significant part of ADC conversion result. The decimation rate configures through `ADCCON2.SDIV` determines how many of these bits are relevant to use.
3:0		0000	R	

ADCH (0xBB) - ADC Data High

Bit	Field Name	Reset	R/W	Description
7:0	ADC[11:4]	0x00	R	Most significant part of ADC conversion result. The decimation rate configures through `ADCCON2.SDIV` determines how many of these bits are relevant to use.

ADCCON1 (0xB4) - ADC Control 1

Bit	Field Name	Reset	R/W	Description	
7	EOC	0	R H0	End of conversion. Cleared when ADCH has been read. If a new conversion is completed before the previous data has been read, the EOC bit will remain high.	
				0	Conversion not complete
				1	Conversion completed
6	ST	0	R/W1	Start conversion. Read as 1 until conversion has completed	
				0	No conversion in progress
				1	Start a conversion sequence if `ADCCON1.STSEL=11` and no sequence is running.
5:4	STSEL[1:0]	11	R/W	Start select. Selects which event that will start a new conversion sequence.	
				00	External trigger on P2_0 pin.
				01	Full speed. Do not wait for triggers.
				10	Timer 1 channel 0 compare event
				11	`ADCCON1.ST=1`
3:2	RCTRL[1:0]	00	R/W	Controls the 16 bit random generator. When set to 01, the setting will automatically return to 00 when operation has completed.	
				00	Operation completed
				01	Clock the LFSR once (13x unrolling)
				10	Reserved
				11	Reserved
1:0		11	R/W	Reserved. Always write 11	

ADCCON2 (0xB5) - ADC Control 2

Bit	Field Name	Reset	R/W	Description	
7:6	SREF[1:0]	00	R/W	Selects reference voltage used for the sequence of conversions	
				00	Internal 1.25V reference
				01	External reference on AIN7 pin (only CC1110Fx)
				10	VDD on the AVDD pin
				11	External reference on AIN6 - AIN7 differential input (only CC1110Fx)
5:4	SDIV[1:0]	01	R/W	Sets the decimation rate for channels included in the sequence of conversions. The decimation rate also determines the resolution and time required to complete a conversion.	
				00	64 dec rate (7 bits resolution)
				01	128 dec rate (9 bits resolution)
				10	256 dec rate (10 bits resolution)
				11	512 dec rate (12 bits resolution)
3:0	SCH[3:0]	00	R/W	Sequence Channel Select. Selects the end of the sequence. `SCH` ≤ 0111: A conversion sequence will contain a conversion from each ADC input, starting at AIN0 and ending at the input programmed in `ADCCON2.SCH`. 1000 ≤ `SCH` ≤ 1011: The sequence will start at the differential input pair (AIN0 - AIN1) and stop at the input pair given by `ADCCON2.SCH`. `SCH` ≥ 1100: Only single conversions are performed. When reading the `ADCCON2.SCH` bits, the number returned will indicate what the last conversion was. Please see Section 12.10.2.6 for details.	
				0000	AIN0
				0001	AIN1
				0010	AIN2
				0011	AIN3
				0100	AIN4
				0101	AIN5
				0110	AIN6
				0111	AIN7
				1000	AIN0 - AIN1
				1001	AIN2 - AIN3
				1010	AIN4 - AIN5
				1011	AIN6 - AIN7
				1100	GND
				1101	Positive voltage reference
				1110	Temperature sensor
				1111	VDD/3

ADCCON3 (0xB6) - ADC Control 3

Bit	Field Name	Reset	R/W	Description	
7:6	EREF[1:0]	00	R/W	Selects reference voltage used for the extra conversion	
				00	Internal 1.25V reference
				01	External reference on AIN7 pin (only CC1110Fx)
				10	VDD on the AVDD pin
				11	External reference on AIN6 - AIN7 differential input (only CC1110Fx)
5:4	EDIV[1:0]	00	R/W	Sets the decimation rate used for the extra conversion. The decimation rate also determines the resolution and time required to complete the conversion.	
				00	64 dec rate (7 bits resolution)
				01	128 dec rate (9 bits resolution)
				10	256 dec rate (10 bits resolution)
				11	512 dec rate (12 bits resolution)
3:0	ECH[3:0]	0000	R/W	Extra channel select. An extra conversion will be triggered by writing to these bits. If they are written while the ADC is running, the conversion will take place as soon as the sequence has completed. If the bits are written while the ADC is not running, the conversion will take place immediately after this register has been updated. The bits are automatically cleared when the extra conversion has finished.	
				0000	AIN0
				0001	AIN1
				0010	AIN2
				0011	AIN3
				0100	AIN4
				0101	AIN5
				0110	AIN6
				0111	AIN7
				1000	AIN0 - AIN1
				1001	AIN2 - AIN3
				1010	AIN4 - AIN5
				1011	AIN6 - AIN7
				1100	GND
				1101	Positive voltage reference
				1110	Temperature sensor
				1111	VDD/3

12.11 Random Number Generator

12.11.1 Introduction

The random number generator has the following features.

- Generate pseudo-random bytes which can be read by the CPU.
- Calculate CRC16 of bytes that are written to `RNDH`.
- Seeded by value written to `RNDL`.

The random number generator is a 16-bit Linear Feedback Shift Register (LFSR) with polynomial $X^{16} + X^{15} + X^{2} + 1$ (i.e. CRC16). It uses different levels of unrolling depending on the operation it performs. The basic version (no unrolling) is shown below.

The random number generator is turned off when `ADCCON1.RCTRL=11`.

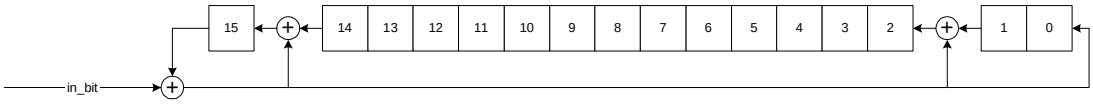

Figure 40: Basic Structure of the Random Number Generator

12.11.2 Random Number Generator Operation

The operation of the random number generator is controlled by the `ADCCON1.RCTRL` bits. The current value of the 16-bit shift register in the LFSR can be read from the `RNDH` and `RNDL` registers.

12.11.2.1 Semi Random Sequence Generation

To generate pseudo-random bytes, `ADCCON1.RCTRL` should be set to 01. This will clock the LFSR once (13x unrolling) and the `ADCCON1.RCTRL` bits will automatically be cleared when the operation has completed.

12.11.2.2 Seeding

The LFSR can be seeded by writing to the `RNDL` register twice. Each time the `RNDL` register is written, the 8 LSB of the LFSR is copied to the 8 MSB and the 8 LSBs are replaced with the new data byte that was written to `RNDL`.

12.11.2.3 CRC16

The LFSR can also be used to calculate the CRC value of a sequence of bytes. Writing to the `RNDH` register will trigger a CRC calculation. The new byte is processed from the MSB end and an 8x unrolling is used, so that a new byte can be written to `RNDH` every clock cycle.

Note that the LFSR must be properly seeded by writing to `RNDL` twice, before the CRC calculations start. Usually the seed value should be 0x0000 or 0xFFFF. Using 0xFFFF as seed value will give the CRC used by the radio.

For the following byte sequence:

0x03, 0x41, 0x42, 0x43

The CRC will be 0xB4BC when using 0xFFFF as seed value.

12.11.3 Registers

The random number generator registers are described in this section.

RNDL (0xBC) - Random Number Generator Data Low Byte

Bit	Field Name	Reset	R/W	Description
[7:0]	RNDL[7:0]	0xFF	R/W	Random value/seed or CRC result, low byte When used for random number generation writing this register twice will seed the random number generator. Writing to this register copies the 8 LSBs of the LFSR to the 8 MSBs and replaces the 8 LSBs with the data value written. The value returned when reading from this register is the 8 LSBs of the LFSR. When used for random number generation, reading this register returns the 8 LSBs of the random number. When used for CRC calculations, reading this register returns the 8 LSBs of the CRC result.

RNDH (0xBD) - Random Number Generator Data High Byte

Bit	Field Name	Reset	R/W	Description
[7:0]	RNDH[7:0]	0xFF	R/W	Random value or CRC result/input data, high byte When written, a CRC16 calculation will be triggered, and the data value written is processed starting with the MSB bit. The value returned when reading from this register is the 8 MSBs of the LFSR. When used for random number generation, reading this register returns the 8 MSBs of the random number. When used for CRC calculations, reading this register returns the 8 MSBs of the CRC result.

12.12 AES Coprocessor

The **CC1110Fx/CC1111Fx** data encryption is performed using a dedicated coprocessor which supports the Advanced Encryption Standard, AES. The coprocessor allows encryption/decryption to be performed with minimal CPU usage.

The coprocessor has the following features:

- ECB, CBC, CFB, OFB, CTR, and CBC- MAC modes.
- Hardware support for CCM mode
- 128-bits key and IV/Nonce
- DMA transfer trigger capability

12.12.1 AES Operation

To encrypt a message, the following procedure must be followed:

- Load key
- Load initialization vector (IV)/nonce
- Download and upload data for encryption/decryption.

The AES coprocessor works on blocks of 128 bits. A block of data is loaded into the coprocessor, encryption is performed, and the result must be read out before the next block can be processed. Before each block load, a dedicated start command must be sent to the coprocessor.

12.12.2 Key and IV

Before a key or IV/nonce load starts, an appropriate load key or IV/nonce command must be issued to the coprocessor. When loading the IV it is important to also set the correct mode.

A key load or IV load operation aborts any processing that could be running.

The key, once loaded, stays valid until a key reload takes place.

The IV must be downloaded before the beginning of each message (not block).

Both key and IV are cleared by a reset of the device and when PM2 or PM3 are entered.

12.12.3 Padding of Input Data

AES works on blocks of 128 bits. If a block contains less than 128 bits, it must be padded with zeros when written to the coprocessor.

12.12.4 Interface to CPU

The CPU communicates with the coprocessor using three SFRs:

- `ENCCS`, Encryption control and status register
- `ENCDI`, Encryption input register
- `ENCDO`, Encryption output register

Read/write to the control and status register is done by the CPU, while read/write the output/input registers is intended for use together with direct memory access (DMA).

When using DMA, one channel is used for input data and one for output data. The DMA channels must be initialized before a start command is written to the `ENCCS`. Writing a start command generates a DMA trigger and the transfer is started. After each block is processed, the interrupt flag, `S0CON.ENCIF`, is asserted, and an interrupt request generated if `IEN0.ENCIE` is set to 1. The interrupt is used to issue a new start command to the `ENCCS`.

12.12.5 Modes of Operation

ECB and CBC modes are performed as described in Section 12.12.1

When using CFB, OFB, and CTR mode, the 128 bits blocks are divided into four 32 bit blocks. 32 bits are loaded into the AES coprocessor and the resulting 32 bits are read out. This continues until all 128 bits have been encrypted. The only time one has to consider this is if data is loaded/read directly using the CPU. When using DMA, this is handled automatically by the DMA triggers generated by the AES coprocessor, thus DMA is preferred.

Both encryption and decryption are performed similarly.

The CBC-MAC mode is a variant of the CBC mode. When performing CBC-MAC, data is downloaded to the coprocessor one 128 bits block at a time, except for the last block. Before the last block is loaded, the mode must be changed to CBC. The last block is then downloaded and the block uploaded will be the MAC value. CBC-MAC decryption is similar to encryption. The message MAC uploaded must be compared with the MAC to be verified.

12.12.6 AES Interrupts

The AES interrupt flag, `S0CON.ENCIF`, is asserted when encryption or decryption of a block is completed. An interrupt request is generated if `IEN0.ENCIE` is set to 1

12.12.7 AES DMA Triggers

There are two DMA triggers associated with the AES coprocessor. These are ENC_DW, which is active when input data needs to be downloaded to the `ENCDI` register, and ENC_UP, which is active when output data needs to be uploaded from the `ENCDO` register.

The `ENCDI` and `ENCDO` registers should be set as destination and source locations for DMA channels used to transfer data to or from the AES coprocessor.

12.12.8 AES Registers

The AES coprocessor registers are described below. These registers will be in their reset state when returning to active mode from PM2 and PM3.

ENCCS (0xB3) - Encryption Control and Status

Bit	Field Name	Reset	R/W	Description	
7		0	R0	Not used	
6:4	MODE[2:0]	000	R/W	Encryption/decryption mode	
				000	CBC
				001	CFB
				010	OFB
				011	CTR
				100	ECB
				101	CBC MAC
				110	Reserved
				111	Reserved
3	RDY	1	R	Encryption/decryption ready status	
				0	Encryption/decryption in progress
				1	Encryption/decryption is completed
2:1	CMD[1:0]	0	R/W	Command to be performed when a 1 is written to ST.	
				00	encrypt block
				01	decrypt block
				10	load key
				11	load IV/nonce
0	ST	0	R/W1 H0	Start processing command set by CMD. Must be issued for each command or 128 bits block of data. Cleared by hardware	

ENCDI (0xB1) - Encryption Input Data

Bit	Field Name	Reset	R/W	Description
7:0	DIN[7:0]	0x00	R/W	Encryption input data.

ENCDO (0xB2) - Encryption Output Data

Bit	Field Name	Reset	R/W	Description
7:0	DOUT[7:0]	0x00	R/W	Encryption output data.

12.13 Watchdog Timer

The watchdog timer (WDT) is intended as a recovery method in situations where the software hangs. The WDT shall reset the system when software fails to clear the WDT within a selected time interval. The watchdog can be used in applications where high reliability is required. If the watchdog function is not needed in an application, it is possible to configure the watchdog timer to be used as an interval timer that can be used to generate interrupts at selected time intervals.

The features of the watchdog timer are as follows:

- Four selectable timer intervals
- Watchdog mode
- Timer mode
- Interrupt request generation in timer mode
- Clock independent from system clock

The operation of the WDT module is controlled by the `WDCTL` register. The watchdog timer consists of a 15-bit counter clocked by the one of the low speed oscillators. Note that the content of the 15-bit counter is not user-accessible. The content of the 15-bit counter is reset to 0x0000 when a PM2 or PM3 is entered.

12.13.1 Watchdog Mode

The watchdog timer is disabled after a system reset. To set the WDT in watchdog mode the `WDCTL.MODE` bit must be set to 0. The watchdog timer counter starts incrementing when the enable bit `WDCTL.EN` is set to 1. When the timer is enabled in watchdog mode it is not possible to disable the timer. Therefore, writing a 0 to `WDCTL.EN` has no effect if a 1 was already written to this bit when `WDCTL.MODE` was 0.

The WDT operates with a watchdog timer clock frequency of 32.768 kHz (low speed crystal oscillator) or 32 - 36 kHz (calibrated low power RC oscillator). The timer interval depend on the count value settings (64, 512, 8192, and 32768 respectively) configured in `WDCTL.INT`.

If the counter reaches the selected timer interval value (watchdog timeout), the watchdog timer generates a reset signal for the system. If a watchdog clear sequence is performed before the counter reaches the selected timer interval value, the counter is reset to 0x0000 and continues incrementing its value. The watchdog clear sequence consists of writing 1010 to `WDCTL.CLR[3:0]` followed by writing 0101 to the same register bits within one half of a watchdog clock period. If this complete sequence is not performed, the watchdog timer generates a reset signal for the system. Note that as long as a correct watchdog clear sequence begins within the selected timer interval, the counter is reset when the complete sequence has been received.

When the watchdog timer has been enabled in watchdog mode, it is not possible to change the mode by writing to the `WDCTL.MODE` bit. The timer interval value can be changed by writing to the `WDCTL.INT[1:0]` bits.

Note that a change in the timer interval value should be followed by a clearing of the watchdog timer to avoid an unwanted watchdog reset.

In watchdog mode, the WDT does not produce an interrupt request.

12.13.2 Timer Mode

To set the WDT in normal timer mode, the `WDCTL.MODE` bit is set to 1. When register bit `WDCTL.EN` is set to 1, the timer is started and the counter starts incrementing. When the counter reaches the selected interval value, the `IRCON2.WDTIF` flag is asserted and an interrupt request is generated if watchdog timer interrupt is enabled (`IEN2.WDTIE=1`).

In timer mode, it is possible to clear the timer contents by writing a 1 to `WDCTL.CLR[0]`. When the timer is cleared the contents of the counter is set to 0x0000. The timer is stopped by setting `WDCTL.EN=0` and restarted from 0x000 by setting `WDCTL.EN=1`.

The timer interval is set by the `WDCTL.INT[1:0]` bits. In timer mode, a reset will not be produced when the timer interval value is reached.

12.13.3 Watchdog Mode and Power Modes

In active mode and PM0 the WDT runs and resets the chip upon timeout. To avoid reset,

the watchdog timer must be cleared before the counter expires.

Power Mode	Comments
PM1	The WDT runs but does not reset the chip upon timeout. If active mode is entered just as the timer expires, the chip will be reset immediately, hence the WDT needs to be cleared regularly (before timeout) also when in PM1.
PM2 and PM3	The WDT is disabled and reset, and the configuration is retained. The counter will start from 0x0000 when active mode is entered from PM2 or PM3

Table 54: Watchdog Mode and Power Modes

12.13.4 Watchdog Timer Register

WDCTL (0xC9) - Watchdog Timer Control

Bit	Field Name	Reset	R/W	Description				
7:4	CLR[3:0]	0000	R/W	Clear timer. When 1010 followed by 0101 is written to these bits, the counter is reset to 0x0000. Note that the watchdog will only be cleared when 0101 is written within 0.5 watchdog clock period after 1010 was written. Writing to these bits when EN is 0 has no effect.				
3	EN	0	R/W	Enable timer. When a 1 is written to this bit the timer is enabled and starts incrementing. Writing a 0 to this bit in timer mode stops the timer. Writing a 0 to this bit in watchdog mode has no effect.				
				0	Timer disabled			
				1	Timer enabled			
2	MODE	0	R/W	Mode select.				
				0	Watchdog mode			
				1	Timer mode			
1:0	INT[1:0]	00	R/W	Timer interval select. These bits select the timer interval defined as a given number of low speed oscillator periods.				
						Timer interval		
					# of periods	32.768 kHz crystal oscillator	32 kHz RCOSC (calibrated, CC1111Fx)	34.667 kHz RCOSC (calibrated, CC1110Fx running @ 26 MHz)
				00	32768	1 s	1.024 s	0.945 s
				01	8192	0.25 s	0.256 s	0.236 s
				10	512	15.625 ms	16 ms	14.769 ms
				11	64	1.953 ms	2 ms	1.846 ms

12.14 USART

USART0 and USART1 are serial communications interfaces that can be operated separately in either asynchronous UART mode or in synchronous SPI mode. The two USARTs are identical in functionality but are assigned to separate I/O pins. Refer to Section 12.4 on Page 90 for I/O configuration.

12.14.1 UART Mode

For asynchronous serial interfaces, the UART mode is provided. In UART mode the interface uses a two-wire or four-wire interface consisting of the pins RXD and TXD, and optionally RTS and CTS. The UART mode includes the following features:

- 8 or 9 data bits
- Odd, even, or no parity
- Configurable start and stop bit level
- Configurable LSB or MSB first transfer
- Independent receive and transmit interrupts
- Independent receive and transmit DMA triggers
- Parity and framing error status

The UART mode provides full duplex asynchronous transfers and the synchronization of bits in the receiver does not interfere with the transmit function. A UART byte transfer consists of a start bit, eight data bits, an optional ninth data or parity bit, and one or two stop bits. Note that the data transferred is referred to as a byte, although the data can actually consist of eight or nine bits.

The UART operation is controlled by the USART x Control and Status registers, `UxCSR`, and the USART x UART Control register, `UxUCR`, where x is the USART number, 0 or 1.

The UART mode is selected when `UxCSR.MODE` is set to 1.

12.14.1.1 UART Transmit

A UART transmission is initiated when the USART Receive/Transmit Data Buffer, `UxDBUF` register is written. The byte is transmitted on the TXDx output pin. The `UxDBUF` register is double-buffered.

The `UxCSR.ACTIVE` bit goes high when the byte transmission starts and low when it ends. When the transmission ends, the `UxCSR.TX_BYTE` bit is set to 1. The USARTx TX complete CPU interrupt flag (`IRCON2.UTXxIF`) is asserted when the `UxDBUF` register is ready to accept new transmit data, and an interrupt request is generated if `IEN2.UTXxIE=1`. This happens immediately after the transmission has been started, hence a new data byte value can be loaded into the data buffer while the byte is being transmitted.

12.14.1.2 UART Receive

Data reception on the UART is initiated when a 1 is written to the `UxCSR.RE` bit. The UART will then search for a valid start bit on the RXDx input pin and set the `UxCSR.ACTIVE` bit high. When a valid start bit has been detected the received byte is shifted into the receive register. The `UxCSR.RX_BYTE` bit and the CPU interrupt flag, `TCON.URXxIF`, is set to 1 when the operation has completed and an interrupt request is generated if `IEN0.URXxIE=1`. At the same time `UxCSR.ACTIVE` will go low.

The received data byte is available through the `UxDBUF` register. When `UxDBUF` is read, `UxCSR.RX_BYTE` is cleared by hardware.

12.14.1.3 UART Hardware Flow Control

Hardware flow control is enabled when the `UxUCR.FLOW` bit is set to 1. The RTS output will then be driven low when the receive register is empty and reception is enabled. Transmission of a byte will not occur before the CTS input go low.

12.14.1.4 UART Character Format

If the `BIT9` and `PARITY` bits in register `UxUCR` are set high, parity generation and detection is enabled. The parity is computed and transmitted as the ninth bit, and during reception, the parity is computed and compared to the received ninth bit. If there is a parity error, the `UxCSR.ERR` bit is set high. This bit is cleared when `UxCSR` is read.

The number of stop bits to be transmitted is set to one or two bits determined by the register bit `UxUCR.SPB`. The receiver will always check for one stop bit. If the first stop bit received during reception is not at the expected stop bit level, a framing error is signaled by setting register bit `UxCSR.FE` high. `UxCSR.FE` is cleared when

UxCSR is read. The receiver will check both stop bits when UxUCR.SPB=1. Note that the USARTx RX complete CPU interrupt flag, TCON.URXxIF, and the UxCSR.RX_BYTE bit will be asserted when the first stop bit is checked OK. If the second stop bit is not OK, the framing error bit, UxCSR.FE, will be asserted. This means that this bit is updated 1 bit duration later than the 2 other above mentioned bits. The UxCSR.ACTIVE bit will be de-asserted after the second stop bit (if UxUCR.SPB=1).

12.14.2 SPI Mode

This section describes the SPI mode of operation for synchronous communication. In SPI mode, the USART communicates with an external system through a 3-wire or 4-wire interface. The interface consists of the pins MOSI, MISO, SCK and SSN. Refer to Section 12.4 on Page 90 for I/O configuration.

The SPI mode includes the following features:

- 3-wire (master) and 4-wire SPI interface
- Master and slave modes
- Configurable SCK polarity and phase
- Configurable LSB or MSB first transfer

The SPI mode is selected when UxCSR.MODE is set to 0.

In SPI mode, the USART can be configured to operate either as an SPI master or as an SPI slave by setting UxCSR.SLAVE to 0 or 1, respectively.

12.14.2.1 SPI Master Operation

An SPI byte transfer in master mode is initiated when the UxDBUF register is written. The USART generates the SCK signal using the baud rate generator (see Section 12.14.3) and shifts the provided byte from the transmit register onto the MOSI output. At the same time the receive register shifts in the received byte from the MISO input pin.

The polarity and clock phase of the serial clock SCK is selected by UxGCR.CPOL and UxGCR.CPHA. The order of the byte transfer is selected by the UxGCR.ORDER bit.

The UxCSR.ACTIVE bit goes high when the transfer starts and low when the transfer ends. When the transfer ends, the UxCSR.TX_BYTE bit is set to 1.

At the end of the transfer, the USARTx RX complete CPU interrupt flag, TCON.URXxIF, is asserted and the received data byte is available in UxDBUF. An interrupt request is generated if IEN0.URXxIE=1

Since UxDBUF is double-buffered, the assertion of the USARTx TX complete CPU interrupt flag (IRCON2.UTXxIF) happens just after a transmission has been initiated, and is therefore not safe to use. Instead, the assertion of the UxCSR.TX_BYTE bit should be used as an indication on when new data can be written to UxDBUF. For DMA transfers this is handled automatically, but with the limitation that the UxGCR.CPHA bit must be set to zero. For systems requiring setting UxGCR.CPHA=1, the DMA can not be used.

Also note that the USARTx TX complete interrupt occurs approximately 1 byte period prior to the USARTx RX complete interrupt.

In SPI master mode, only the MOSI, MISO, and SCK should be configured as peripherals (see Section 12.4.6.1 and 12.4.6.2). If the external slave requires a slave select signal (SSN) this can be implemented by using a general-purpose I/O pin and control from SW.

12.14.2.2 SPI Slave Operation

An SPI byte transfer in slave mode is controlled by the external system. The data on the MOSI input is shifted into the receive register controlled by the serial clock SCK, which is an input in slave mode. At the same time the byte in the transmit register is shifted out onto the MISO output.

The UxCSR.ACTIVE bit is set to 1 when SNN is asserted and cleared when SNN is de-asserted. The UxCSR.RX_BYTE bit is set to 1 when a byte transfer ends.

At the end of the transfer, the USARTx RX complete CPU interrupt flag, TCON.URXxIF, is asserted and the received data byte is available in UxDBUF. An interrupt request is generated if IEN0.URXxIE=1. The USARTx TX complete CPU interrupt flag, IRCON2.UTXxIF, is asserted at the start of the operation and an interrupt request is generated if IEN2.UTXxIE=1.

The expected polarity and clock phase of SCK is selected by UxGCR.CPOL and UxGCR.CPHA as shown in Figure 41. The expected order of the byte transfer is selected by the UxGCR.ORDER bit.

12.14.2.3 Slave Select pin (SSN)

When the USART is operating in SPI slave mode, a 4-wire interface is used with the Slave Select (SSN) pin as an input to the SPI (edge controlled). The SPI slave becomes active after a falling edge on SSN and will receive data on the MOSI input and send data on the MISO output. After a rising edge on SSN, the SPI slave is inactive and will not receive data. Note that the MISO output is not tri-stated when the SPI slave is inactive. Also note that the rising edge on SSN must be aligned to the end of the byte sent / received. If this is not the case, the next received byte will be corrupted. If there is a rising edge on SSN in the middle of a byte, this should be followed by a USART flush to avoid corruption of the following byte.

In SPI master mode, the SSN pin is not used. When the USART operates as an SPI master and a slave select signal is needed by an external SPI slave device, a general purpose I/O pin should be used to implement the slave select signal function in software.

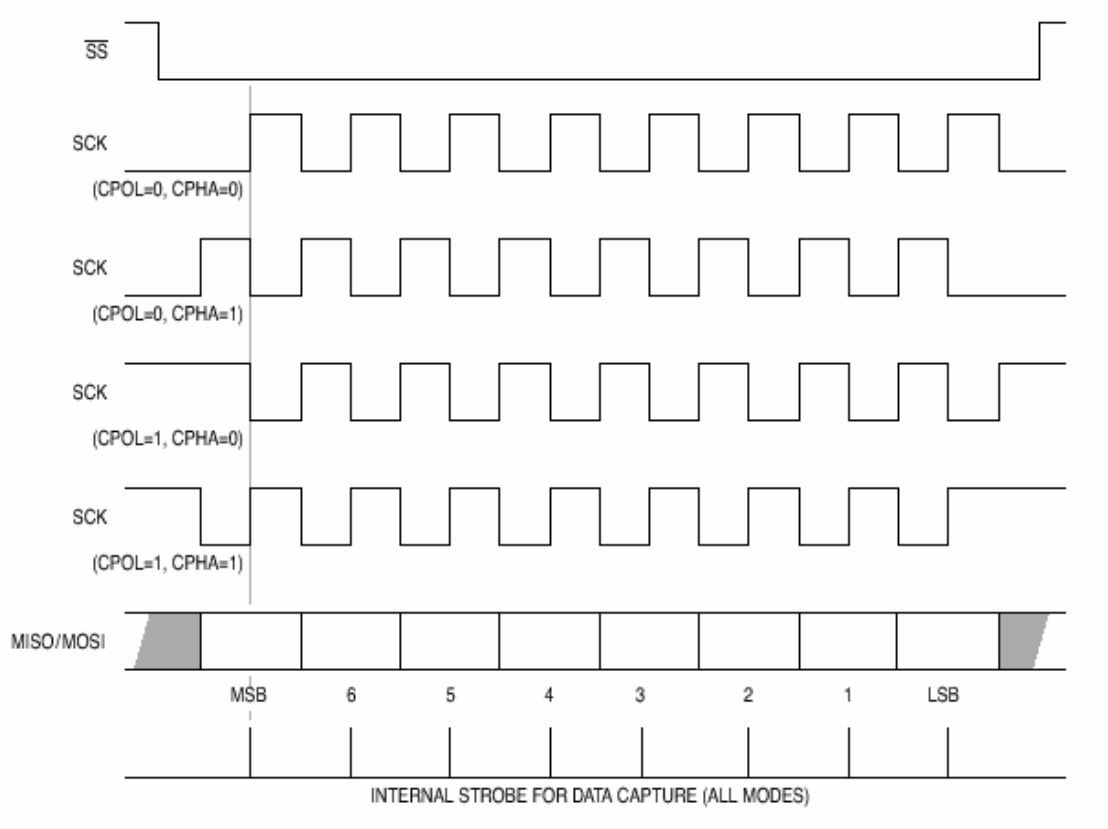

Figure 41: SPI Dataflow

12.14.3 Baud Rate Generation

An internal baud rate generator set up the UART baud rate when operating in UART mode and the SPI master clock frequency when operating in SPI mode.

The `UxBAUD.BAUD_M[7:0]` and `UxGCR.BAUD_E[4:0]` registers define the baud rate used for UART transfers and the rate of the serial clock (SCK) for SPI transfers. The baud rate is given by the following equation:

$$Baudrate = \frac{(256 + BAUD_M) \cdot 2^{BAUD_E}}{2^{28}} \cdot F$$

where F is the system clock frequency set by the selected system clock source.

The register values required for standard baud rates are shown in Table 55 (F = 26 MHz) and Table 56 (24 MHz). The tables also give the difference in actual baud rate to standard baud rate value as a percentage error.

The maximum baud rate for UART mode is F/16 (`UxGCR.BAUD_E[4:0]=16` and `UxBAUD.BAUD_M[7:0]=0`).

The maximum baud rate for SPI master mode and thus SCK frequency is F/8 (`UxGCR.BAUD_E[4:0]=17` and `UxBAUD.BAUD_M[7:0]=0`). If SPI master mode does not need to receive data, the

maximum SPI rate is F/2 (UxGCR.BAUD_E[4:0]=19 and UxBAUD.BAUD_M[7:0]=0). Setting higher baud rates than this will give erroneous results. For SPI slave mode the maximum baud rate is always F/8.

Note that the baud rate must be configured before any other UART or SPI operations take place (the baud rate should never be changed when UxCSR.ACTIVE is asserted).

Baud Rate [bps]	UxBAUD.BAUD_M	UxGCR.BAUD_E	Error (%)
2400	131	6	0.04
4800	131	7	0.04
9600	131	8	0.04
14400	34	9	0.13
19200	131	9	0.04
28800	34	10	0.13
38400	131	10	0.04
57600	34	11	0.13
76800	131	11	0.04
115200	34	12	0.13
230400	34	13	0.13

Table 55: Commonly used Baud Rate Settings for 26 MHz System Clock

Baud Rate [bps]	UxBAUD.BAUD_M	UxGCR.BAUD_E	Error (%)
2400	163	6	0.08
4800	163	7	0.08
9600	163	8	0.09
14400	59	9	0.13
19200	163	9	0.10
28800	59	10	0.14
38400	163	10	0.10
57600	59	11	0.14
76800	163	11	0.10
115200	59	12	0.14
230400	59	13	0.14

Table 56: Commonly used Baud Rate Settings for 24 MHz System Clock

12.14.4 USART Flushing

The current operation can be aborted (operation stopped and all data buffers cleared) by setting UxUCR.FLUSH=1. Asserting the FLUSH bit should either be aligned with USART interrupts or a wait time of one bit duration (at current baud rate) should be added after setting the bit to 1 before accessing the USART registers.

12.14.5 USART Interrupts

Each USART has two interrupts. These are the USART x RX complete interrupt (TCON.URXxIF) and the USART x TX complete interrupt (IRCON2.UTXxIF). The interrupts are enabled by setting IEN0.URXxIE=1 and IEN2.UTXxIE=1, respectively. Please see the previous sections on how the interrupt flags are asserted in the different modes of operation (UART RX, UART TX, SPI master, and SPI Slave).

The interrupt enables and flags are summarized below.

Interrupt enable bits:

- USART0 RX : IEN0.URX0IE
- USART1 RX : IEN0.URX1IE
- USART0 TX : IEN2.UTX0IE
- USART1 TX : IEN2.UTX1IE

Interrupt flags:

- USART0 RX : TCON.URX0IF
- USART1 RX : TCON.URX1IF
- USART0 TX : IRCON2.UTX0IF
- USART1 TX : IRCON2.UTX1IF

12.14.6 USART DMA Triggers

There are two DMA triggers associated with each USART (URX0, UTX0, URX1, and UTX1). The DMA triggers are activated by RX complete and TX complete events i.e. the same events that might generate USART interrupt requests. A DMA channel can be configured using a USART Receive/transmit buffer, `UxDBUF`, as source or destination address.

> *Note: For systems requiring setting* `UxGCR.CPHA=1`*, the DMA can not be used.*

Refer to Table 51 on Page 107 for an overview of the DMA triggers.

12.14.7 USART Registers

The registers for the USART are described in this section. For each USART there are five registers consisting of the following (x refers to USART number i.e. 0 or 1):

- `UxCSR` USART x Control and Status
- `UxUCR` USART x UART Control
- `UxGCR` USART x Generic Control
- `UxDBUF` USART x Receive/Transmit Data Buffer
- `UxBAUD` USART x Baud Rate Control

U0CSR (0x86) - USART 0 Control and Status

Bit	Field Name	Reset	R/W	Description	
7	MODE	0	R/W	USART 0 mode select	
				0	SPI mode
				1	UART mode
6	RE	0	R/W	UART 0 receiver enable	
				0	Receiver disabled
				1	Receiver enabled
5	SLAVE	0	R/W	SPI 0 master or slave mode select	
				0	SPI master
				1	SPI slave
4	FE	0	R/W 0	UART 0 framing error status	
				0	No framing error detected
				1	Byte received with incorrect stop bit level *Note: `TCON.URX0IF` and `U0CSR.RX_BYTE` bit will be asserted when the first stop bit is checked OK, meaning that if two stop bits are sent and the second stop bit is not OK, this bit is asserted 1 bit duration later than the 2 other above mentioned bits.*
3	ERR	0	R/W 0	UART 0 parity error status	
				0	No parity error detected
				1	Byte received with parity error
2	RX_BYTE	0	R/W 0	Receive byte status	
				0	No byte received
				1	Received byte ready
1	TX_BYTE	0	R/W 0	Transmit byte status	
				0	Byte not transmitted
				1	Last byte written to Data Buffer register transmitted
0	ACTIVE	0	R	USART 0 transmit/receive active status	
				0	USART 0 idle
				1	USART 0 busy in transmit or receive mode

U0UCR (0xC4) - USART 0 UART Control

Bit	Field Name	Reset	R/W	Description
7	FLUSH	0	R0/ W1	Flush unit. When set to 1, this event will immediately stop the current operation and return the unit to idle state. This bit will be 0 when returning from PM2 and PM3
6	FLOW	0	R/W	UART 0 hardware flow control enable. Selects use of hardware flow control with RTS and CTS pins
				0 Flow control disabled
				1 Flow control enabled
5	D9	0	R/W	UART 0 data bit 9 contents. This value is used when 9 bit transfer is enabled. When parity is disabled the value written to D9 is transmitted as the 9th bit when `BIT9=1`. If parity is enabled then this bit sets the parity level as follows.
				0 Even parity
				1 Odd parity
4	BIT9	0	R/W	UART 0 9-bit data enable
				0 8 bits transfer
				1 9 bits transfer (content of the 9th bit is given by `D9` and `PARITY`.)
3	PARITY	0	R/W	UART 0 parity enable
				0 Parity disabled
				1 Parity enabled
2	SPB	0	R/W	UART 0 number of stop bits
				0 1 stop bit
				1 2 stop bits
1	STOP	1	R/W	UART 0 stop bit level
				0 Low stop bit
				1 High stop bit
0	START	0	R/W	UART 0 start bit level. The polarity of the idle line is assumed to be the opposite of the selected start bit level.
				0 Low start bit
				1 High start bit

U0GCR (0xC5) - USART 0 Generic Control

Bit	Field Name	Reset	R/W	Description
7	CPOL	0	R/W	SPI 0 clock polarity
				0 Negative clock polarity (SCK low when idle)
				1 Positive clock polarity (SCK high when idle)
6	CPHA	0	R/W	SPI 0 clock phase
				0 Data centered on first edge of SCK period
				1 Data centered on second edge of SCK period
5	ORDER	0	R/W	Bit order for transfers
				0 LSB first
				1 MSB first
4:0	BAUD_E[4:0]	00000	R/W	Baud rate exponent value. `BAUD_E` along with `BAUD_M` decides the UART 0 baud rate and the SPI 0 clock (SCK) frequency

U0DBUF (0xC1) - USART 0 Receive/Transmit Data Buffer

Bit	Field Name	Reset	R/W	Description
7:0	DATA[7:0]	0x00	R/W	USART 0 receive and transmit data buffer. Writing data to `U0DBUF` places the data into the internal transmit buffer. Reading `U0DBUF` returns the contents of the receive buffer.

U0BAUD (0xC2) - USART 0 Baud Rate Control

Bit	Field Name	Reset	R/W	Description
7:0	BAUD_M[7:0]	0x00	R/W	Baud rate mantissa value. `BAUD_M` along with `BAUD_E` decides the UART 0 baud rate and the SPI 0 clock (SCK) frequency

U1CSR (0xF8) - USART 1 Control and Status

Bit	Field Name	Reset	R/W	Description
7	MODE	0	R/W	USART 1 mode select
				0 SPI mode
				1 UART mode
6	RE	0	R/W	UART 1 receiver enable
				0 Receiver disabled
				1 Receiver enabled
5	SLAVE	0	R/W	SPI 1 master or slave mode select
				0 SPI master
				1 SPI slave
4	FE	0	R/W 0	UART 1 framing error status
				0 No framing error detected
				1 Byte received with incorrect stop bit level Note that `TCON.URX1IF` and `U1CSR.RX_BYTE` bit will be asserted when the first stop bit is checked OK, meaning that if two stop bits are sent and the second stop bit is not OK, this bit is asserted 1 bit duration later than the 2 other above mentioned bits.
3	ERR	0	R/W 0	UART 1 parity error status
				0 No parity error detected
				1 Byte received with parity error
2	RX_BYTE	0	R/W 0	Receive byte status
				0 No byte received
				1 Received byte ready
1	TX_BYTE	0	R/W 0	Transmit byte status
				0 Byte not transmitted
				1 Last byte written to Data Buffer register transmitted
0	ACTIVE	0	R	USART 1 transmit/receive active status
				0 USART 1 idle
				1 USART 1 busy in transmit or receive mode

U1UCR (0xFB) - USART 1 UART Control

Bit	Field Name	Reset	R/W	Description
7	FLUSH	0	R0/ W1	Flush unit. When set to 1, this event will immediately stop the current operation and return the unit to idle state. This bit will be 0 when returning from PM2 and PM3
6	FLOW	0	R/W	UART 1 hardware flow control enable. Selects use of hardware flow control with RTS and CTS pins
				0 Flow control disabled
				1 Flow control enabled
5	D9	0	R/W	UART 1 data bit 9 contents. This value is used when 9 bit transfer is enabled. When parity is disabled the value written to D9 is transmitted as the 9th bit when `BIT9=1` If parity is enabled then this bit sets the parity level as follows.
				0 Even parity
				1 Odd parity
4	BIT9	0	R/W	UART 1 9-bit data enable
				0 8 bits transfer
				1 9 bits transfer (content of the 9th bit is given by `D9` and `PARITY`.)
3	PARITY	0	R/W	UART 1 parity enable
				0 Parity disabled
				1 Parity enabled
2	SPB	0	R/W	UART 1 number of stop bits
				0 1 stop bit
				1 2 stop bits
1	STOP	1	R/W	UART 1 stop bit level
				0 Low stop bit
				1 High stop bit
0	START	0	R/W	UART 1 start bit level. The polarity of the idle line is assumed to be the opposite of the selected start bit level.
				0 Low start bit
				1 High start bit

U1GCR (0xFC) - USART 1 Generic Control

Bit	Field Name	Reset	R/W	Description
7	CPOL	0	R/W	SPI 1 clock polarity
				0 Negative clock polarity (SCK low when idle)
				1 Positive clock polarity (SCK high when idle)
6	CPHA	0	R/W	SPI 1 clock phase
				0 Data centered on first edge of SCK period
				1 Data centered on second edge of SCK period
5	ORDER	0	R/W	Bit order for transfers
				0 LSB first
				1 MSB first
4:0	BAUD_E[4:0]	00000	R/W	Baud rate exponent value. `BAUD_E` along with `BAUD_M` decides the UART 1 baud rate and the SPI 1 clock (SCK) frequency

U1DBUF (0xF9) - USART 1 Receive/Transmit Data Buffer

Bit	Field Name	Reset	R/W	Description
7:0	DATA[7:0]	0x00	R/W	USART 1 receive and transmit data buffer. Writing data to U1DBUF places the data into the internal transmit buffer. Reading U1DBUF returns the contents of the receive buffer.

U1BAUD (0xFA) - USART 1 Baud Rate Control

Bit	Field Name	Reset	R/W	Description
7:0	BAUD_M[7:0]	0x00	R/W	Baud rate mantissa value. BAUD_M along with BAUD_E decides the UART 1 baud rate and the SPI 1 clock (SCK) frequency

12.15 I^{2}S

The ***CC1110Fx/CC1111Fx*** provides an industry standard I^{2}S interface. The I^{2}S interface can be used to transfer digital audio samples between the ***CC1110Fx/CC1111Fx*** and an external audio device.

The I^{2}S interface can be configured to operate as master or slave and may use mono as well as stereo samples. When mono mode is enabled, the same audio sample will be used for both channels. Both full and half duplex is supported and automatic µ-Law compression and expansion can be used.

The I^{2}S interface consists of 4 signals:

- Continuous Serial Clock (SCK)
- Word Select (WS)
- Serial Data In (RX)
- Serial Data Out (TX)

Please see Section 12.4.6.6 for details on I/O pin mapping for the I^{2}S interface. When the module is in master mode, it drives the SCK and WS lines. When the I^{2}S interface is in slave mode, these lines are driven by an external master. The data on the serial data lines is transferred one bit per SCK cycle, most significant bit first. The WS signal selects the channel of the current word transfer (left = 0, right = 1). It also determines the length of each word. There is a transition on the WS line one bit time before the first word is transferred and before the last bit of each word. Figure 42 shows the I^{2}S signaling. Only a single serial data signal is shown in this figure. The SD signal could be the RX or TX signal depending on the direction of the data.

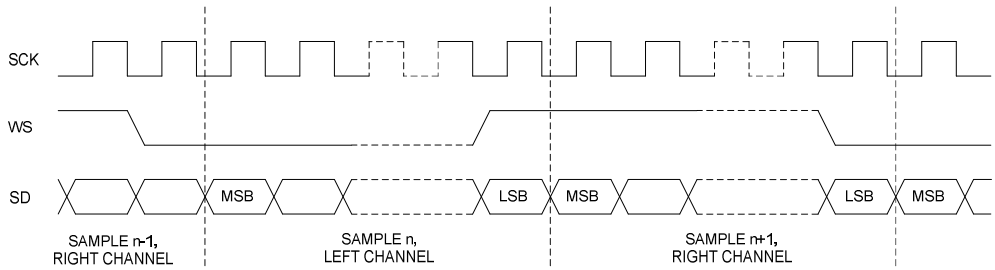

Figure 42: I^{2}S Digital Audio Signaling

12.15.1 Enabling I^{2}S

The I2SCFG0.ENAB bit must be set to 1 to enable the I^{2}S transmitter/receiver. However, when I2SCFG0.ENAB is 0, the I^{2}S can still be used as a stand-alone µ-Law compression/expansion engine. Refer to Section 12.15.12 on Page 164 for more details about this.

12.15.2 I^{2}S Interrupts

The I^{2}S has two interrupts:

- I^{2}S RX complete interrupt (I2SRX)
- I^{2}S TX complete interrupt (I2STX)

The I^{2}S interrupt enable bits are found in the I2SCFG0 register. The interrupt flags are

located in the I2SSTAT register. The interrupt enables and flags are summarized below.

Interrupt enable bits:

- I^2S RX: I2SCFG0.RXIEN
- I^2S TX: I2SCFG0.TXIEN

Interrupt flags:

- I^2S RX: I2SSTAT.RXIRQ
- I^2S TX: I2SSTAT.TXIRQ

The TX interrupt flag I2SSTAT.TXIRQ is asserted together with IRCON2.I2STXIF when the internal TX buffer is empty and the I^2S fetches the new data previously written to the I2SDATH:I2SDATL registers. The TX interrupt flag, I2SSTAT.TXIRQ, is cleared when I2SDATH register is written. An interrupt request is only generated when I2SCFG0.TXIEN and IEN2.I2STXIE are both set to 1.

The RX interrupt flag I2SSTAT.RXIRQ is asserted together with TCON.I2SRXIF when the internal RX buffer is full and the contents of the RX buffer is copied to the pair of internal data registers that can be read from the I2SDATH:I2SDATL registers. The RX interrupt flag, I2SSTAT.RXIRQ, is cleared when the I2SDATH register is read. An interrupt request is only generated when I2SCFG0.RXIEN and IEN0.I2SRXIE are both set to 1.

Notice that interrupts will also be generated if the corresponding RXIRQ or TXIRQ flags are set from software, given that the interrupts are enabled.

The I^2S shares interrupt vector with USART 1, and the ISR must take this into account if both modules are used. Refer to 10.5 on Page 60 for more details about interrupts.

12.15.3 I^2S DMA Triggers

There are two DMA triggers associated with the I^2S interface, I2SRX and I2STX. The DMA triggers are activated by RX complete and TX complete events, i.e. the same events that can generated the I^2S interrupt requests. The DMA triggers are not masked by the interrupt enable bits, I2SCFG0.RXIEN and I2SCFG0.TXIEN, hence a DMA channel can be configured to use the I^2S receive/transmit data registers, I2SDATH:I2SDATL, as source or destination address and let RX and TX complete trigger the DMA.

Notice that the DMA triggers I2SRX and ADC_CH6 share the same DMA trigger number (# 27) in the same way as I2STX and ADC_CH7 share DMA trigger number 28. This means that I2SRX can not be used together with ADC_CH6 and I2STX can not be used together with ADC_CH7. On the CC1111Fx ADC channels 6 and 7 cannot be used since P0_6 and P0_7 I/O pins are not available.

Refer to Table 51 on Page 107 for an overview of the DMA triggers.

12.15.4 Underflow/Overflow

If the I^2S attempts to read from the internal TX buffer when it is empty, an underflow condition occurs. The I^2S will then continue to read from the data in the TX buffer, and I2SSTAT.TXUNF will be asserted.

If the I^2S attempts to write to the internal RX buffer while it is full, an overflow condition occurs. The contents of the RX buffer will be overwritten and the I2SSTAT.RXOVF flag will be asserted.

Thus, when debugging an application, software may check for underflow/overflow when an interrupt is generated or when the application completes. The TXUNF / RXOVF flags should be cleared in software.

12.15.5 Writing a Word (TX)

When each sample fits into a single byte or µ-Law compressed samples (always 8 bits) are written, i.e. µ-Law expansion is enabled (I2SCFG0.ULAWE=1), only the I2SDATH register needs to be written.

When each sample is more than 8 bits the low byte must be written to the I2SDATL register before the high byte is written to the I2SDATH register, hence writing the I2SDATH register indicates the completion of the write operation.

When the I^2S is configured to send stereo, i.e. I2SCFG0.TXMONO is 0, the I2SSTAT.TXLR flag can be used to determine whether the left- or right-channel sample is to be written to the data registers.

12.15.6 Reading a Word (RX)

If each sample fits into a single byte or if µ-Law compression is enabled (I2SCFG0.ULAWC=1), only the I2SDATH register needs to be read.

When each sample is more than 8 bits the low byte must be read from the I2SDATL register before the high byte is being read from the

I2SDATH register, hence reading from the I2SDATH register indicates the completion of the read operation.

When the I²S is configured to receive stereo, i.e. I2SCFG0.RXMONO is 0, the I2SSTAT.RXLR flag can be used to determine whether the sample currently in the data registers is a left- or right-channel sample.

12.15.7 Full vs. Half Duplex

The I²S interface supports full duplex and half duplex operation.

In full duplex both the RX and TX lines will be used. Both the I2SCFG0.TXIEN and I2SCFG0.RXIEN interrupt enable bits must be set to 1 if interrupts are used and both DMA triggers I2STX and I2SRX must be used.

When half duplex is used only one of the RX and TX lines are typically connected. Only the appropriate interrupt flag should be set and only one of the DMA triggers should be used.

12.15.8 Master Mode

The I²S is configured as a master device by setting I2SCFG0.MASTER to 1. When the module is in master mode, it drives the SCK and WS lines.

12.15.8.1 Clock Generation

When the I²S is configured as master, the frequency of the SCK clock signal must be set to match the sample rate. The clock frequency must be set before master mode is enabled.

SCK is generated by dividing the system clock using a fractional clock divider. The amount of division is given by the 15 bit numerator, NUM , and 9-bit denominator, DENOM, as shown in the following formula:

$$F_{sck} = \frac{F_{clk}}{2(\frac{NUM}{DENOM})}$$

$$\text{where } \frac{NUM}{DENOM} > 3.35$$

F_{clk} is the system clock frequency and F_{sck} is the I²S SCK sample clock frequency.

The value of the numerator is set in the I2SCLKF2.NUM[14:8]:I2SCLKF1.NUM[7:0] registers and the denominator value is set in I2SCLKF2.DENOM[8]:I2SCLKF0.DENOM[7:0].

Please note that to stay within the timing requirements of the I²S specification [7], a minimum value of 3.35 should be used for the (NUM / DENOM) fraction.

The fractional divider is made such that most normal sample rates should be supported for most normal word sizes with a 24 MHz system clock frequency (CC1111Fx). Examples of supported configurations for a 24 MHz system clock are given in Table 57. Table 58 shows the configuration values for a 26 MHz system clock frequency. Notice that the generated I²S frequency is not exact for the 44.1 kHz, 16 bits word size configuration at 26 MHz. The numbers are calculated using the following formulas, where F_s is the sample rate and W is the word size:

$$F_s = \frac{F_{sck}}{2 \cdot W}$$

$$CLKDIV = \frac{NUM}{DENOM} = \frac{F_{clk}}{4 \cdot W \cdot F_s}$$

F_s (kHz)	Word Size (W)	CLKDIV	I2SCLKF2	I2SCLKF1	I2SCLKF0	Exact
8	8	93.75	0x01	0x77	0x04	Yes
8	16	46.875	0x01	0x77	0x08	Yes
44.1	16	8.503401	0x04	0xE2	0x93	Yes
48	16	7.8125	0x00	0x7D	0x10	Yes

Table 57: Example I²S Clock Configurations (CC1111Fx, 24 MHz)

F_s (kHz)	Word Size (W)	CLKDIV	I2SCLKF2	I2SCLKF1	I2SCLKF0	Exact
8	8	101.5625	0x06	0x59	0x10	Yes
8	16	50.78125	0x06	0x59	0x20	Yes
44.1	16	9.21201	0x8A	0x2F	0x1B	No
48	16	8.46354	0x06	0x59	0xC0	Yes

Table 58: Example I²S Clock Configurations (CC1110Fx, 26 MHz)

12.15.8.2 Word Size

The word size must be set before master mode is enabled. The word size is the number of bits used for each sample and can be set to a value between 1 and 33. To set the word size, write word size – 1 to the `I2SCFG1.WORDS[4:0]` bits. Setting the word size to a value of 17 or more causes the I^2S to pad each word with 0's in the least significant bits since the data registers provide maximum 16 bits. This feature allows samples to be sent to an I^2S device that takes a higher resolution than 16 bits.

If the size of the received samples exceeds 16 bits, only the 16 most significant bits will be put in the data registers and the remaining low order bits will be discarded.

12.15.9 Slave Mode

The I^2S is configured as a slave device by setting `I2SCFG0.MASTER` to 0. When in slave mode the SCK and WS signals are generated by an external I^2S master and are inputs to the I^2S interface.

12.15.9.1 Word Size

When the I^2S operates in slave mode, the word size is determined by the master that generates the WS signal.

The I^2S will provide bits from the internal 16-bit buffer until the buffer is empty. If the buffer becomes empty and the master still requests more bits, the I^2S will send 0's (low order bits).

If more than 16 bits are being received, the low order bits are discarded.

12.15.10 Mono

The I^2S also supports mono audio samples.

To receive mono samples, `I2SCFG0.RXMONO` should be set to 1. Words from the right channel will then not be read into the data registers. This feature is included because some mono devices repeat their audio data in both channels and the left channel is the default mono channel.

To send mono samples, `I2SCFG0.TXMONO` should be set to 1. Each word will then be repeated in both channels before a new word is fetched from the data registers. This is to enable sending a mono audio signal to a stereo audio sink device.

12.15.11 Word Counter

The I^2S contains a 10-bit word counter, which is counting transitions on the WS line. The counter can be cleared by triggers or by writing to the `I2SWCNT` register. When a trigger occurs, or a value is written to `I2SWCNT`, the current value of the word counter is copied into the `I2SSTAT.WCNT[9:8]:I2SWCNT.WCNT[7:0]`registers and the word counter is cleared.

Three triggers can be used to copy/clear the word counter.

- USB SOF: USB Start of Frame. Occurs every ms (***CC1111Fx*** only)
- T1_CH0: Timer 1, compare, channel 0
- IOC_1: IO pin input transition (P1_3)

Which trigger to use is configured through the `TRIGNUM` field in the `I2SCFG1` register. When the I^2S is configured not to use any trigger (`I2SCFG1.TRIGNUM=0`), the word counter can only be copied/cleared from software.

The word counter will saturate if it reaches its maximum value. Software should configure the trigger-interval and sample-rate to ensure this never happens.

CC1111Fx: The word counter is typically used to calculate the average sample rate over a long period of time (e.g. 1 second) needed by adaptive isochronous USB endpoints. The USB SOF event must then be used as trigger.

12.15.12 µ-Law Compression and Expansion

The I^2S interface can be configured to perform µ-Law compression and expansion. µ-Law compression is enabled by setting the `I2SCFG0.ULAWC` bit to 1 and µ-Law expansion is enabled by setting the `I2SCFG0.ULAWE` bit to 1.

When the I^2S interface is enabled, i.e. the `I2SCFG0.ENAB` bit is 1, and µ-Law expansion is enabled, every byte of µ-Law compressed data written to the `I2SDATH` register is expanded to a 16-bit sample before being transmitted. When the I^2S interface is enabled and µ-Law compression is enabled each sample received is compressed to an 8-bit µ-Law sample and put in the `I2SDATH` register.

When the I^2S interface is disabled, i.e. the `I2SCFG0.ENAB` bit is 0, it can still be used to perform µ-Law compression/expansion for other resources in the system. To perform an expansion, `I2SCFG0.ULAWE` must be 1 and

I2SCFG0.ULAWC must be 0 before writing a byte of compressed data to the I2SDATH register. The expansion takes one clock cycle to perform, and then the result can be read from the I2SDATH:I2SDATL registers.

To perform a compression I2SCFG0.ULAWE must be 0 and I2SCFG0.ULAWC must be 1. To start the compression, an un-compressed 16-bit sample should be written to the I2SDATH:I2SDATL registers. The compression takes one clock cycle to perform, and then the result can be read from the I2SDATH register.

Only one of the flags I2SCFG0.ULAWC and I2SCFG0.ULAWE should be set to 1 when the I2SCFG0.ENAB bit is 0.

12.15.13 I^2S Registers

This section describes all the registers used for I^2S control and status. The I^2S registers reside in XDATA memory space in the region 0xDF40 - 0xDF48. Table 33 on Page 52 gives an overview of register addresses while the tables in this section describe each register. Notice that the reset values for the registers reflect a configuration with 16-bit stereo samples and 44.1 kHz sample rate. The I^2S is not enabled at reset.

0xDF40: I2SCFG0 - I^{2}S Configuration Register 0

Bit	Field Name	Reset	R/W	Description		
7	TXIEN	0	R/W	Transmit interrupt enable		
				0	Interrupt disabled	
				1	Interrupt enabled	
6	RXIEN	0	R/W	Receive interrupt enable		
				0	Interrupt disabled	
				1	Interrupt enabled	
5	ULAWE	0	R/W	µ-Law expansion enable		
				0	Expansion disabled	
				1	Expansion enabled	
					`ENAB=0`	Expand data written to `I2SDATH`
					`ENAB=1`	Enable expansion of data to transmit
4	ULAWC	0	R/W	µ-Law compression enable		
				0	Compression disabled	
				1	Compression enabled	
					`ENAB=0`	Compress data written to `I2SDATH:I2SDATL`
					`ENAB=1`	Enable compression of data received
3	TXMONO	0	R/W	TX mono enable		
				0	Stereo mode	
				1	Each sample of audio data will be repeated in both channels before a new sample is fetched. This is to enable sending a mono signal to a stereo audio sink device.	
2	RXMONO	0	R/W	RX mono enable		
				0	Stereo mode	
				1	Data from the right channel will be discarded, i.e. not be read into the data registers. This feature is included because some mono devices repeat their audio data in both channels and left is the default mono channel.	
1	MASTER	0	R/W	Master mode enable		
				0	Slave (CLK and WS are read from the pads)	
				1	Master (generate the CLK and WS)	
0	ENAB	0	R/W	I^{2}S interface enable		
				0	Disable (I^{2}S can be used as a µ-Law compression/expansion unit)	
				1	Enable	

0xDF41: I2SCFG1 - I²S Configuration Register 1

Bit	Field Name	Reset	R/W	Description	
7:3	WORDS[4:0]	01111	R/W	This field gives the word size – 1. The word size is the bit-length of one sample for one channel. Used to generate the WS signal when in master mode. Reset value 01111 corresponds to 16 bit samples.	
2:1	TRIGNUM[1:0]	00	R/W	Word counter copy / clear trigger	
				00	No trigger. Counter copied / cleared by writing to the `I2SWCNT` register
				01	USB SOF (*CC1111Fx* only)
				10	IOC_1 (P1_3)
				11	T1_CH0
0	IOLOC	0	R/W	The pin locations for the I²S signals. This bit selects between the two alternative pin mapping alternatives. Refer to Table 50 on Page 92 for an overview of pin locations.	
				0	Alt. 1 in Table 50 is used
				1	Alt. 2 in Table 50 is used
				Note: If the I²S interface is enabled (`I2SCFG0_ENAB=1`), the I²S interface will have precedence in cases where other peripherals (except for the debug interface) are configured to be on the same location. This is the case even if the pins are configured to be general purpose I/O pins.	

0xDF42: I2SDATL - I²S Data Low Byte

Bit	Field Name	Reset	R/W	Description
7:0	I2SDAT[7:0]	0x00	R/W	Data register low byte. If this register is not written between two writes to the `I2SDATH` register, the low byte of the TX register will be cleared. *Note: This register will be in its reset state when returning to active mode from PM2 and PM3.*

0xDF43: I2SDATH - I²S Data High Byte

Bit	Field Name	Reset	R/W	Description
7:0	I2SDAT[15:8]	0x00	R/W	Data register high byte. When this register is read, `I2SSTAT.RXIRQ` is de-asserted and the RX buffer is considered empty. When this register is written, `I2SSTAT.TXIRQ` is de-asserted and the TX buffer is considered full. *Note: This register will be in its reset state when returning to active mode from PM2 and PM3.*

0xDF44: I2SWCNT - I²S Word Count Register

Bit	Field Name	Reset	R/W	Description
7:0	WCNT[7:0]	0x00	R/W	This register contains the 8 low order bits of the 10-bit internal word counter at the time of the last trigger. If this register is written (any value), the value of the internal word counter is copied into this register and `I2SSTAT.WCNT[9:8]`, and the internal word counter is cleared. Refer to Section 12.15.11 for details about how to use this register.

0xDF45: I2SSTAT - I²S Status Register

Bit	Field Name	Reset	R/W	Description	
7	TXUNF	0	R/W	TX buffer underflow. This bit must be cleared by software	
6	RXOVF	0	R/W	Rx buffer overflow. This bit must be cleared by software	
5	TXLR	0	R	0	Left channel should be placed in transmit buffer
				1	Right channel should be placed in transmit buffer
4	RXLR	0	R	0	Left channel currently in receive buffer
				1	Right channel currently in receive buffer
3	TXIRQ	0	R/W1 H0	TX interrupt flag. This bit is cleared by hardware when the `I2SDATH` register is written.	
				0	Interrupt not pending
				1	Interrupt pending
2	RXIRQ	0	R/W1 H0	RX Interrupt flag. This is cleared by hardware when the `I2SDATH` register is read.	
				0	Interrupt not pending
				1	Interrupt pending
1:0	WCNT[9:8]	00	R	Upper 2 bits of the 10-bit internal word counter at the time of the last trigger	

0xDF46: I2SCLKF0 - I²S Clock Configuration Register 0

Bit	Field Name	Reset	R/W	Description
7:0	DENOM[7:0]	0x93	R/W	The clock division denominator low bits

0xDF47: I2SCLKF1 - I²S Clock Configuration Register 1

Bit	Field Name	Reset	R/W	Description
7:0	NUM[7:0]	0xE2	R/W	Clock division numerator low bits

0xDF48: I2SCLKF2 - I²S Clock Configuration Register 2

Bit	Field Name	Reset	R/W	Description
7	DENOM[8]	0	R/W	Clock division denominator high bits
6:0	NUM[14:8]	0x04	R/W	Clock division numerator high bits

12.16 USB Controller

*Note: The USB controller is only available on the **CC1111Fx**.*

The **CC1111Fx contains** a Full-Speed USB 2.0 compatible USB controller for serial communication with a PC or other equipment with USB host functionality.

Note: This section will focus on describing the functionality of the USB controller, and it is assumed that the reader has a good understanding of USB and is familiar with the terms and concepts used. Refer to the Universal Serial Bus Specification for details [6].

*Standard USB nomenclature is used regarding IN and OUT. I.e., IN is always into the host (PC) and OUT is out of the host (into the **CC1111Fx**)*

The USB controller monitors the USB bus for relevant activity and handles packet transfers. The **CC1111Fx** will always operate as a slave on the USB bus and responds only on requests from the host (a packet can only be sent (or received) when the USB host sends a request in the form of a token).

Appropriate response to USB interrupts and loading/unloading of packets into/from endpoint FIFOs is the responsibility of the firmware. The firmware must be able to reply correctly to all standard requests from the USB host and work according to the protocol implemented in the driver on the PC.

The USB Controller has the following features:

- Full-Speed operation (up to 12 Mbps)
- 5 endpoints (in addition to endpoint 0) that can be used as IN, OUT, or IN/OUT and can be configured as bulk/interrupt or isochronous.
- 1 KB SRAM FIFO available for storing USB packets
- Endpoints supporting packet sizes from 8 – 512 bytes
- Support for double buffering of USB packets

Figure 43 shows a block diagram of the USB controller. The USB PHY is the physical interface with input and output drivers. The USB SIE is the Serial Interface Engine which controls the packet transfer to/from the endpoints. The USB controller is connected to the rest of the system through the Memory Arbiter.

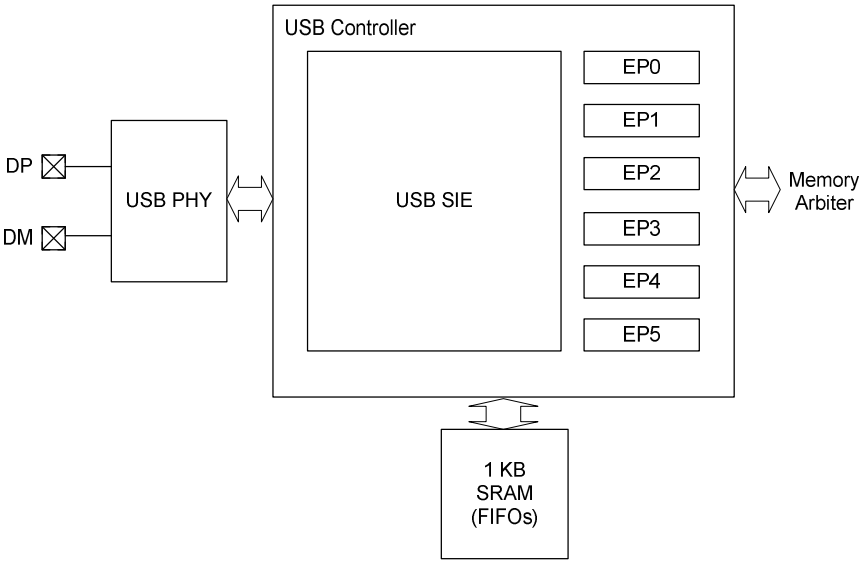

Figure 43: USB Controller Block Diagram

12.16.1 48 MHz Clock

A 48 MHz external crystal must be used for the USB Controller to operate correctly. This 48 MHz clock is divided by two internally to generate a maximum system clock frequency of 24 MHz. It is important that the crystal oscillator is stable before the USB Controller is

accessed. See 12.1.5.1 for details on how to set up the crystal oscillator.

12.16.2 USB Enable

The USB Controller must be enabled before it is used. This is performed by setting the SLEEP.USB_EN bit to 1. Setting SLEEP.USB_EN to 0 will reset the USB controller.

12.16.3 USB Interrupts

There are 3 interrupt flag registers with associated interrupt enable mask registers.

Interrupt Flag	Description	Associated Interrupt Enable Mask Register
USBCIF	Contains flags for common USB interrupts	USBCIE
USBIIF	Contains interrupt flags for endpoint 0 and all the IN endpoints	USBIIE
USBOIF	Contains interrupt flags for all OUT endpoints	USBOIE
Note: All interrupts except SOF and suspend are initially enabled after reset		

Table 59: USB Interrupt Flags Interrupt Enable Mask Registers

In addition to the interrupt flags in the registers shown in Table 59, there are two CPU interrupt flags associated with the USB controller; IRCON2.USBIF and IRCON.P0IF. For an interrupt request to be generated, IEN1.P0IE and/or IEN2.USBIE must be set to 1 together with the desired interrupt enable bits from the USBCIE, USBIIE, and USBOIE registers. When an interrupt request has been generated, the CPU will start executing the ISR if there are no higher priority interrupts pending. The USB controller uses interrupt #6 for USB interrupts. This interrupt number is shared with Port 2 inputs, hence the interrupt routine must also handle Port 2 interrupts if they are enabled. The interrupt routine should read all the interrupt flag registers and take action depending on the status of the flags. The interrupt flag registers will be cleared when they are read and the status of the individual interrupt flags should therefore be saved in memory (typically in a local variable on the stack) to allow them to be accessed multiple times.

At the end of the ISR, after the interrupt flags have been read, the interrupt flags should be cleared to allow for new USB/P2 interrupts to be detected. The port 2 interrupt status flags in the P2IFG register should be cleared prior to clearing IRCON2.P2IF (see Section 10.5.2).

Refer to Table 39 and Table 40 for a complete list of interrupts, and Section 10.5 for more details about interrupts.

12.16.3.1 USB Resume Interrupt

P0_7 does not exist on the CC1111Fx, but the corresponding interrupt is used for USB resume interrupt. This means that to be able to wake up the CC1111Fx from PM1/suspend when resume signaling has been detected on the USB bus, IEN1.P0IE must be set to 1 together with PICTL.P0IENH. PICTL.P0ICON must be 0 to enable interrupts on rising edge. The P0 ISR should check the P0IFG.USB_RESUME, and resume if this bit is set to 1. If PM1 is entered from within an ISR due to a suspend interrupt, it is important that the priority of the P0 interrupt is set higher than the priority of the interrupt from which PM1 was entered. See Section 12.16.9 for more details about suspend and resume.

12.16.4 Endpoint 0

Endpoint 0 (EP0) is a bi-directional control endpoint and during the enumeration phase all communication is performed across this endpoint. Before the USBADDR register has been set to a value other than 0, the USB controller will only be able to communicate through endpoint 0. Setting the USBADDR register to a value between 1 and 127 will bring the USB function out of the Default state in the enumeration phase and into the Address state. All configured endpoints will then be available for the application.

The EP0 FIFO is only used as either IN or OUT and double buffering is not provided for endpoint 0. The maximum packet size for endpoint 0 is fixed at 32 bytes.

Endpoint 0 is controlled through the USBCS0 register by setting the USBINDEX register to 0. The USBCNT0 register contains the number of bytes received.

12.16.5 Endpoint 0 Interrupts

The following events may generate an EP0 interrupt request:

- A data packet has been received (USBCS0.OUTPKT_RDY=1)
- A data packet that was loaded into the EP0 FIFO has been sent to the USB host (USBCS0.INPKT_RDY should be set to 1 when a new packet is ready to be transferred. This bit will be cleared by HW when the data packet has been sent)
- An IN transaction has been completed (the interrupt is generated during the Status stage of the transaction)
- A STALL has been sent (USBCS0.SENT_STALL=1)
- A control transfer ends due to a premature end of control transfer (USBCS0.SETUP_END=1)

Any of these events will cause the USBIIF.EP0IF to be asserted regardless of the status of the EP0 interrupt mask bit USBIIE.EP0IE. If the EP0 interrupt mask bit is set to 1, the CPU interrupt flag IRCON2.USBIF will also be asserted. An interrupt request is only generated if IEN2.USBIE and USBIIE.EP0IE are both set to 1.

12.16.5.1 Error Conditions

When a protocol error occurs, the USB controller sends a STALL handshake. The USBCS0.SENT_STALL bit is asserted and an interrupt request is generated if the endpoint 0 interrupt is properly enabled. A protocol error can be any of the following:

- An OUT token is received after USBCS0.DATA_END has been set to complete the OUT Data stage (the host tries to send more data than expected)
- An IN token is received after USBCS0.DATA_END has been set to complete the IN Data stage (the host tries to receive more data than expected)
- The USB host tries to send a packet that exceeds the maximum packet size during the OUT Data stage
- The size of the DATA1 packet received during the Status stage is not 0

The firmware can also terminate the current transaction by setting the USBCS0.SEND_STALL bit to 1. The USB controller will then send a STALL handshake in response to the next requests from the USB host.

If an EP0 interrupt is caused by the assertion of the USBCS0.SENT_STALL bit, this bit should be de-asserted and firmware should consider the transfer as aborted (free memory buffers etc.).

If EP0 receives an unexpected token during the Data stage, the USBCS0.SETUP_END bit will be asserted and an EP0 interrupt will be generated (if enabled properly). EP0 will then switch to the IDLE state. Firmware should then set the USBCS0.CLR_SETUP_END bit to 1 and abort the current transfer. If USBCS0.OUTPKT_RDY is asserted, this indicates that another Setup Packet has been received that firmware should process.

12.16.5.2 SETUP Transactions (IDLE State)

The control transfer consists of 2 - 3 stages of transactions (Setup - Data - Status or Setup - Status). The first transaction is a Setup transaction. A successful Setup transaction comprises three sequential packets (a token packet, a data packet, and a handshake packet), where the data field (payload) of the data packet is exactly 8 bytes long and are referred to as the Setup Packet. In the Setup stage of a control transfer, EP0 will be in the IDLE state. The USB controller will reject the data packet if the Setup Packet is not 8 bytes. Also, the USB controller will examine the contents of the Setup Packet to determine whether or not there is a Data stage in the control transfer. If there is a Data stage, EP0 will switch state to TX (IN transaction) or RX (OUT transaction) when the USBCS0.CLR_OUTPKT_RDY bit is set to 1 (if USBCS0.DATA_END=0).

When a packet is received, the USBCS0.OUTPKT_RDY bit will be asserted and an interrupt request is generated (EP0 interrupt) if the interrupt has been enabled. Firmware should perform the following when a Setup Packet has been received:

1. Unload the Setup Packet from the EP0 FIFO
2. Examine the contents and perform the appropriate operations
3. Set the USBCS0.CLR_OUTPKT_RDY bit to 1. This denotes the end of the Setup stage. If the control transfer has no Data stage, the USBCS0.DATA_END bit must also be set. If there is no Data stage, the USB Controller will stay in the IDLE state.

12.16.5.3 IN Transactions (TX state)

If the control transfer requires data to be sent to the host, the Setup stage will be followed by one or more IN transactions in the Data stage. In this case the USB controller will be in TX state and only accept IN tokens. A successful IN transaction comprises two or three sequential packets (a token packet, a data packet, and a handshake packet[19]). If more than 32 bytes (maximum packet size) is to be sent, the data must be split into a number of 32 byte packets followed by a residual packet. If the number of bytes to send is a multiple of 32, the residual packet will be a zero length data packet, hence a packet size less than 32 bytes denotes the end of the transfer.

Firmware should load the EP0 FIFO with the first data packet and set the USBCS0.INPKT_RDY bit as soon as possible after the USBCS0.CLR_OUTPKT_RDY bit has been set. The USBCS0.INPKT_RDY will be cleared and an EP0 interrupt will be generated when the data packet has been sent. Firmware might then load more data packets as necessary. An EP0 interrupt will be generated for each packet sent. Firmware must set USBCS0.DATA_END in addition to USBCS0.INPKT_RDY when the last data packet has been loaded. This will start the Status stage of the control transfer.

EP0 will switch to the IDLE state when the Status stage has completed. The Status stage may fail if the USBCS0.SEND_STALL bit is set to 1. The USBCS0.SENT_STALL bit will then be asserted and an EP0 interrupt will be generated as explained in Section 12.16.5.1.

If USBCS0.INPKT_RDY is not set when receiving an IN token, the USB Controller will reply with a NAK to indicate that the endpoint is working, but temporarily has no data to send.

12.16.5.4 OUT Transactions (RX state)

If the control transfer requires data to be received from the host, the Setup stage will be followed by one or more OUT transactions in the Data stage. In this case the USB controller will be in RX state and only accept OUT tokens. A successful OUT transaction comprises two or three sequential packets (a token packet, a data packet, and a handshake packet[20]). If more than 32 bytes (maximum packet size) is to be received, the data must be split into a number of 32 byte packets followed by a residual packet. If the number of bytes to receive is a multiple of 32, the residual packet will be a zero length data packet, hence a data packet with payload less than 32 bytes denotes the end of the transfer.

The USBCS0.OUTPKT_RDY bit will be set and an EP0 interrupt will be generated when a data packet has been received. The firmware should set USBCS0.CLR_OUTPKT_RDY when the data packet has been unloaded from the EP0 FIFO. When the last data packet has been received (packet size less than 32 bytes) firmware should also set the USBCS0.DATA_END bit. This will start the Status stage of the control transfer. The size of the data packet is kept in the USBCNT0 registers. Note that this value is only valid when USBCS0.OUTPKT_RDY=1.

EP0 will switch to the IDLE state when the Status stage has completed. The Status stage may fail if the DATA1 packet received is not a zero length data packet or if the USBCS0.SEND_STALL bit is set to 1. The USBCS0.SENT_STALL bit will then be asserted and an EP0 interrupt will be generated as explained in Section 12.16.5.1.

12.16.6 Endpoints 1 - 5

Each endpoint can be used as an IN only, an OUT only, or IN/OUT. For an IN/OUT endpoint there are basically two endpoints, an IN endpoint and an OUT endpoint associated with the endpoint number. Configuration and control of IN endpoints is performed through the USBCSIL and USBCSIH registers. The USBCSOL and USBCSOH registers are used to

[19] For isochronous transfers there would not be a handshake packet from the host

[20] For isochronous transfers there would not be a handshake packet from the CC1111Fx

configure and control OUT endpoints. Each IN and OUT endpoint can be configured as either Isochronous (USBCSIH.ISO=1 and/or USBCSOH.ISO=1) or Bulk/Interrupt (USBCSIH.ISO=0 and/or USBCSOH.ISO=0) endpoints. Bulk and Interrupt endpoints are handled identically by the USB controller but will have different properties from a firmware perspective.

The USBINDEX register must have the value of the endpoint number before the Indexed Endpoint Registers are accessed (see Table 35 on Page 53).

12.16.6.1 FIFO Management

Each endpoint has a certain number of FIFO memory bytes available for incoming and outgoing data packets. Table 60 shows the FIFO size for endpoints 1 - 5. It is the firmware that is responsible for setting the USBMAXI and USBMAXO registers correctly for each endpoint to prevent data from being overwritten.

When both the IN and the OUT endpoint of an endpoint number do not use double buffering, the sum of USBMAXI and USBMAXO must not exceed the FIFO size for the endpoint. Figure 44 a) shows how the IN and OUT FIFO memory for an endpoint is organized with single buffering. The IN FIFO grows down from the top of the endpoint memory region while the OUT FIFO grows up from the bottom of the endpoint memory region.

When the IN or OUT endpoint of an endpoint number *use* double buffering, the sum of USBMAXI and USBMAXO must not exceed half the FIFO size for the endpoint. Figure 44 b) illustrates the IN and OUT FIFO memory for an endpoint that uses double buffering. Notice that the second OUT buffer starts from the middle of the memory region and grows upwards. The second IN buffer also starts from the middle of the memory region but grows downwards.

To configure an endpoint as IN only, set USBMAXO to 0 and to configure an endpoint as OUT only, set USBMAXI to 0.

For unused endpoints, both USBMAXO and USBMAXI should be set to 0.

EP Number	FIFO Size (in bytes)
1	32
2	64
3	128
4	256
5	512

Table 60: FIFO Sizes for EP{1 - 5}

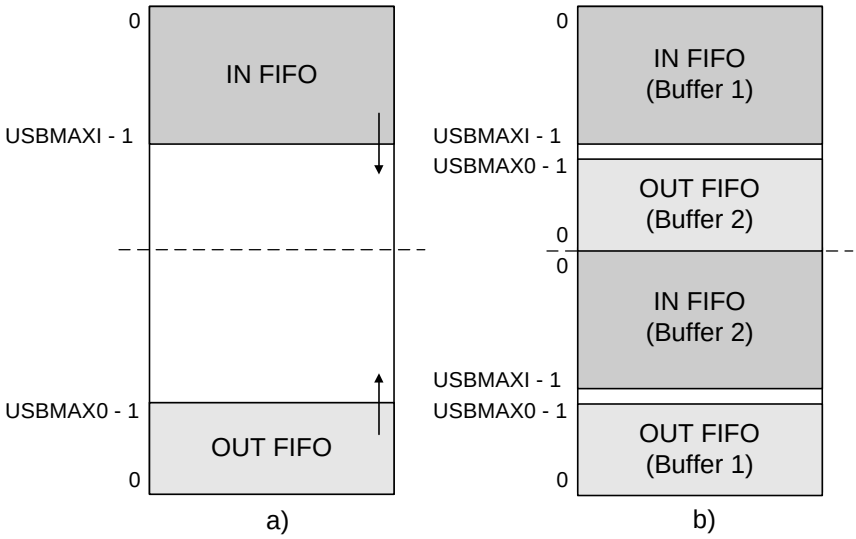

Figure 44: IN/OUT FIFOs, a) Single Buffering b) Double Buffering

12.16.6.2 Double Buffering

To enable faster transfer and reduce the need for retransmissions, **CC1111Fx** implements double buffering, allowing two packets to be buffered in the FIFO in each direction. This is highly recommended for isochronous endpoints, which are expected to transfer one data packet every USB frame without any retransmission. For isochronous endpoint one data packet will be sent/received every USB frame. However, the data packet may be

sent/received at any time during the USB frame period and there is a chance that two data packets may be sent/received at a few micro seconds interval. For isochronous endpoints, an incoming packet will be lost if there is no buffer available and a zero length data packet will be sent if there is no data packet ready for transmission when the USB host requests data. Double buffering is not as critical for bulk and interrupt endpoints as it is for isochronous endpoint since packets will not be lost. Double buffering, however, may improve the effective data rate for bulk endpoints.

To enable double buffering for an IN endpoint, `USBCSIH.IN_DBL_BUF` must be set to 1. To enable double buffering for an OUT endpoint, set `USBCSOH.OUT_DBL_BUF` to 1.

12.16.6.3 FIFO Access

The endpoint FIFOs are accessed by reading and writing to the registers in Table 36 on Page 53. Writing to a register causes the byte written to be inserted into the IN FIFO. Reading a register causes the next byte in the OUT FIFO to be extracted and the value of this byte to be returned.

When a data packet has been written to an IN FIFO, the `USBCSIL.INPKT_RDY` bit must be set to 1. If double buffering is enabled, the `USBCSIL.INPKT_RDY` bit will be cleared immediately after it has been written and another data packet can be loaded. This will not generate an IN endpoint interrupt, since an interrupt is only generated when a packet has been sent. When double buffering is used firmware should check the status of the `USBCSIL.PKT_PRESENT` bit before writing to the IN FIFO. If this bit is 0, two data packets can be written. Double buffered isochronous endpoints should only need to load two packets the first time the IN FIFO is loaded. After that, one packet is loaded for every USB frame. To send a zero length data packet, `USBCSIL.INPKT_RDY` should be set to 1 without loading a data packet into the IN FIFO.

A data packet can be read from the OUT FIFO when the `USBCSOL.OUTPKT_RDY` bit is 1. An interrupt will be generated when this occurs, if enabled. The size of the data packet is kept in the `USBCNTH:USBCNTL` registers. Note that this value is only valid when `USBCSOL.OUTPKT_RDY=1`. When the data packet has been read from the OUT FIFO, the `USBCSOL.OUTPKT_RDY` bit must be cleared. If double buffering is enabled there may be two data packets in the FIFO. If another data packet is ready when the `USBCSOL.OUTPKT_RDY` bit is cleared the `USBCSOL.OUTPKT_RDY` bit will be asserted immediately and an interrupt will be generated (if enabled) to signal that a new data packet has been received. The `USBCSOL.FIFO_FULL` bit will be set when there are two data packets in the OUT FIFO.

The AutoClear feature is supported for OUT endpoints. When enabled, the `USBCSOL.OUTPKT_RDY` bit is cleared automatically when `USBMAXO` bytes have been read from the OUT FIFO. The AutoClear feature is enabled by setting `USBCSOH.AUTOCLEAR=1`. The AutoClear feature can be used to reduce the time the data packet occupies the OUT FIFO buffer and is typically used for bulk endpoints.

A complementary AutoSet feature is supported for IN endpoints. When enabled, the `USBCSIL.INPKT_RDY` bit is set automatically when `USBMAXI` bytes have been written to the IN FIFO. The AutoSet feature is enabled by setting `USBCSIH.AUTOSET=1`. The AutoSet feature can reduce the overall time it takes to send a data packet and is typically used for bulk endpoints.

12.16.6.4 Endpoint 1 - 5 Interrupts

The following events may generate an IN EPx interrupt request (x indicates the endpoint number):

- A data packet that was loaded into the IN FIFO has been sent to the USB host (`USBCSIL.INPKT_RDY` should be set to 1 when a new packet is ready to be transferred. This bit will be cleared by HW when the data packet has been sent)
- A STALL has been sent (`USBCSIL.SENT_STALL=1`). Only Bulk/Interrupt endpoints can be stalled
- The IN FIFO is flushed due to the `USBCSIH.FLUSH_PACKET` bit being set to 1

Any of these events will cause `USBIIF.INEPxIF` to be asserted regardless of the status of the IN EPx interrupt mask bit `USBIIE.INEPxIE`. If the IN EPx interrupt mask bit is set to 1, the CPU interrupt flag `IRCON2.USBIF` will also be asserted. An interrupt request is only generated if `IEN2.USBIE` and `USBIIE.INEPxIE` are both set to 1. The x in the register names refer to the endpoint number 1 - 5)

The following events may generate an OUT EPx interrupt request:

- A data packet has been received (USBCS0L.OUTPKT_RDY=1)
- A STALL has been sent (USBCSIL.SENT_STALL=1). Only Bulk/Interrupt endpoints can be stalled

Any of these events will cause USBOIF.OUTEPxIF to be asserted regardless of the status of the OUT EPx interrupt mask bit USBOIE.OUTEPxIE. If the OUT EPx interrupt mask bit is set to 1, the CPU interrupt flag IRCON2.USBIF will also be asserted. An interrupt request is only generated if IEN2.USBIE and USBOIE.OUTEPxIE are both set to 1.

12.16.6.5 Bulk/Interrupt IN Endpoint

Interrupt IN transfers occur at regular intervals while bulk IN transfers utilize available bandwidth not allocated to isochronous, interrupt, or control transfers.

Interrupt IN endpoints may set the USBCSIH.FORCE_DATA_TOG bit. When this bit is set the data toggle bit is continuously toggled regardless of whether an ACK was received or not. This feature is typically used by interrupt IN endpoints that are used to communicate rate feedback for Isochronous endpoints.

A Bulk/Interrupt IN endpoint can be stalled by setting the USBCSIL.SEND_STALL bit to 1. When the endpoint is stalled, the USB controller will respond with a STALL handshake to IN tokens. The USBCSIL.SENT_STALL bit will then be set and an interrupt will be generated, if enabled.

A bulk transfer longer than the maximum packet size is performed by splitting the transfer into a number of data packets of maximum size followed by a smaller data packet containing the remaining bytes. If the transfer length is a multiple of the maximum packet size, a zero length data packet is sent last. This means that a packet with a size less than the maximum packet size denotes the end of the transfer. The AutoSet feature can be useful in this case, since many data packets will be of maximum size.

12.16.6.6 Isochronous IN Endpoint

An Isochronous IN endpoint is used to transfer periodic data from the USB controller to the host (one data packet every USB frame).

If there is no data packet loaded in the IN FIFO when the USB host requests data, the USB controller sends a zero length data packet and the USBCSIL.UNDERRUN bit will be asserted.

Double buffering requires that a data packet is loaded into the IN FIFO during the frame preceding the frame where it should be sent. If the first data packet is loaded before an IN token is received, the data packet will be sent during the same frame as it was loaded and hence violate the double buffering strategy. Thus, when double buffering is used, the USBPOW.ISO_WAIT_SOF bit should be set to 1 to avoid this. Setting this bit will ensure that a loaded data packet is not sent until the next SOF token has been received.

The AutoSet feature will typically not be used for isochronous endpoints since the packet size will increase or decrease from frame to frame.

12.16.6.7 Bulk/Interrupt OUT Endpoint

Interrupt OUT transfers occur at regular intervals while bulk OUT transfers utilize available bandwidth not allocated to isochronous, interrupt, or control transfers.

A Bulk/Interrupt OUT endpoint can be stalled by setting the USBCS0L.SEND_STALL bit to 1. When the endpoint is stalled, the USB controller will respond with a STALL handshake when the host is done sending the data packet. The data packet is discarded and is not placed in the OUT FIFO. The USB controller will assert the USBCS0L.SENT_STALL bit when the STALL handshake is sent and generate an interrupt request if the OUT endpoint interrupt is enabled.

As the AutoSet feature is useful for bulk IN endpoints, the AutoClear feature is useful for OUT endpoints since many packets will be of maximum size.

12.16.6.8 Isochronous OUT Endpoint

An Isochronous OUT endpoint is used to transfer periodic data from the host to the USB controller (one data packet every USB frame).

If there is no buffer available when a data packet is being received, the USBCS0L.OVERRUN bit will be asserted and the packet data will be lost. Firmware can reduce the chance for this to happen by using double buffering and use DMA to effectively unload data packets.

An isochronous data packet in the OUT FIFO may have bit errors. The hardware will detect this condition and set `USBCSOL.DATA_ERROR`. Firmware should therefore always check this bit when unloading a data packet.

The AutoClear feature will typically not be used for isochronous endpoints since the packet size will increase or decrease from frame to frame.

12.16.7 DMA

DMA should be used to fill the IN endpoint FIFOs and empty the OUT endpoint FIFOs. Using DMA will improve the read/write performance significantly compared to using the 8051 CPU. It is therefore highly recommended to use DMA unless timing is not critical or only a few bytes are to be transferred.

There are no DMA triggers for the USB controller, meaning that DMA transfers must be triggered by firmware.

The word size can be byte (8 bits) or word (16 bits). When word size transfer is used the `ENDIAN` register must be set correctly (see Section 12.5.7). The `ENDIAN.USBRLE` bit selects whether a word is read as little or big endian from the OUT FIFOs and the `ENDIAN.USBWLE` bit selects whether a word is written as little or big endian to the IN FIFOs. Writing and reading words for the different settings is shown in

Figure 45 and Figure 46 respectively. Notice that the setting for these bits will be used for all endpoints. Consequently, it is not possible to have multiple DMA channels active at once that use different endianness. The `ENDIAN` register must be configured to use big endian for both read and write for a word size transfer to produce the same result as a byte size transfer of an even number of bytes. Word size transfers are slightly more efficient than byte transfers.

Refer to Section 12.5 for more details regarding DMA.

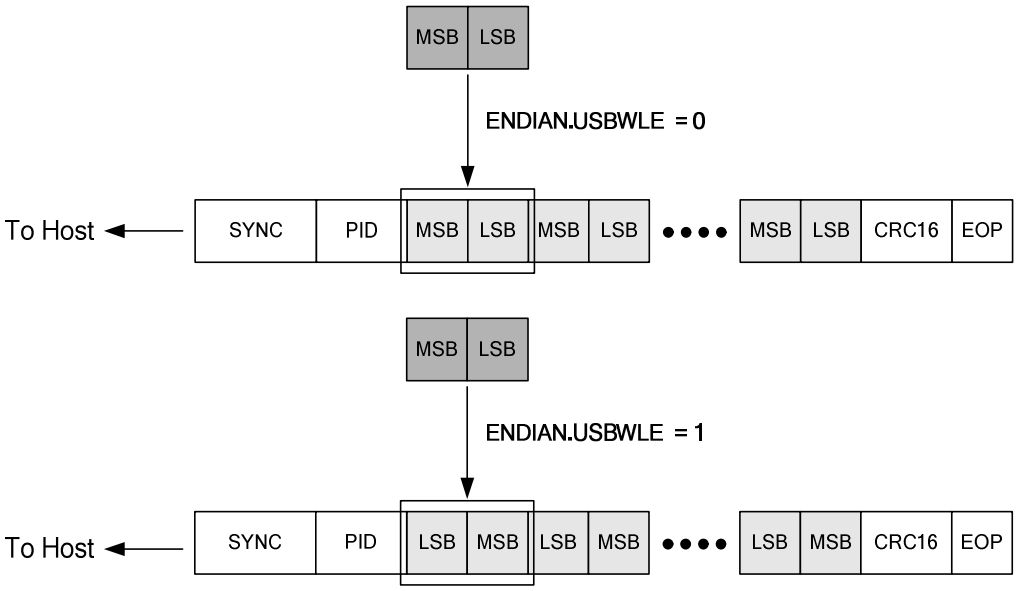

Figure 45: Writing Big/Little Endian

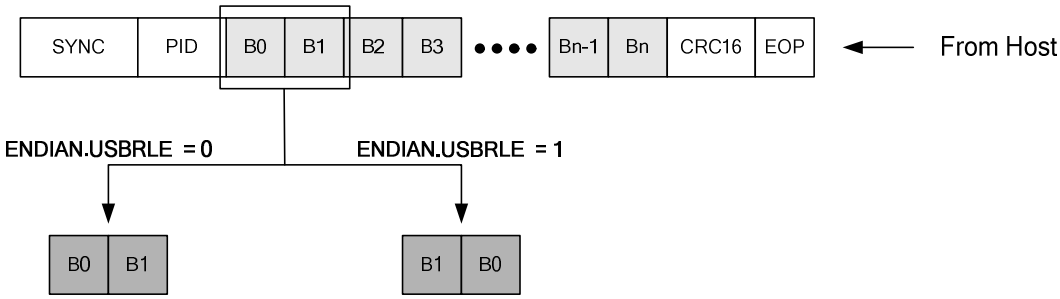

Figure 46: Reading Big/Little Endian

12.16.8 USB Reset

When reset signaling is detected on the bus, the USBCIF.RSTIF flag will be asserted. If USBCIE.RSTIE is enabled, IRCON2.USBIF will also be asserted and an interrupt request is generated if IEN2.USBIE=1. The firmware should take appropriate action when a USB reset occurs. A USB reset should place the device in the Default state where it will only respond to address 0 (the default address). One or more resets will normally take place during the enumeration phase right after the USB cable is connected.

The following actions are performed by the USB controller when a USB reset occurs:

- USBADDR is set to 0
- USBINDEX is set to 0
- All endpoint FIFOs are flushed
- USBCS0, USBCSIL, USBCSIH, USBCSOL, USBCSOH are cleared.
- All interrupts, except SOF and suspend, are enabled
- An interrupt request is generated (if IEN2.USBIE=1 and USBCIE.RSTIE=1)

Firmware should close all pipes and wait for a new enumeration phase when USB reset is detected.

12.16.9 Suspend and Resume

The USB controller will assert USBCIF.SUSPENDIF and enter suspend mode when the USB bus has been continuously idle for 3 ms, provided that USBPOW.SUSPEND_EN=1. IRCON2.USBIF will be asserted if USBCIE.SUSPENDIE is enabled, and an interrupt request is generated if IEN2.USBIE=1.

While in suspend mode, only limited current can be sourced from the USB bus. See the USB 2.0 Specification [6] for details about this. To be able to meet the suspend-current requirement, the **CC1111Fx** should be taken down to PM1 when suspend is detected. The **CC1111Fx** should not enter PM2 or PM3 since this will reset the USB controller.

Any valid non-idle signaling on the USB bus will cause the USBCIF.RESUMEIF to be asserted and an interrupt request to be generated and wake up the system if the USB resume interrupt is configured correctly. Refer to 12.16.3.1 for details about how to set up the USB resume interrupt.

Any valid non-idle signaling on the USB bus will cause the USBCIF.RESUMEIF to be asserted and an interrupt request to be generated and wake up the system if the USB resume interrupt is configured correctly. Refer to 12.16.3.1 for details about how to set up the USB resume interrupt.

When the system wakes up (enters active mode) from suspend, no USB registers must be accessed before the 48 MHZ crystal oscillator has stabilized.

A USB reset will also wake up the system from suspend. A USB resume interrupt request will be generated, if the interrupt is configured as described in 12.16.3.1, but the USBCIF.RSTIF interrupt flag will be set instead of the USBCIF.RESUMEIF interrupt flag.

12.16.10 Remote Wakeup

The USB controller can resume from suspend by signaling resume to the USB hub. Resume is performed by setting USBPOW.RESUME to 1 for approximately 10 ms. According to the USB 2.0 Specification [6], the resume signaling must be present for at least 1 ms and no more than 15 ms. It is, however, recommended to keep the resume signaling for approximately 10 ms. Notice that support for remote wakeup must be declared in the USB descriptor, and that the USB host must grant the device the privilege to perform remote wakeup (through a SET_FEATURE request).

12.16.11 USB Registers

This section describes all USB registers used for control and status for the USB. The USB registers reside in XDATA memory space in the region 0xDE00 - 0xDE3F. These registers can be divided into three groups: The Common USB Registers, the Indexed Endpoint Registers, and the Endpoint FIFO Registers. Table 34, Table 35, and Table 36 give an overview of the registers in the three groups respectively, while the remaining of this section will describe each register in detail. The Indexed Endpoint Registers represent the currently selected endpoint. The USBINDEX register is used to select the endpoint.

Notice that the upper register addresses 0xDE2C - 0xDE3F are reserved.

0xDE00: USBADDR - Function Address

Bit	Field Name	Reset	R/W	Description
7	UPDATE	0	R	This bit is set when the `USBADDR` register is written and cleared when the address becomes effective.
6:0	USBADDR[6:0]	0000000	R/W	Device address

0xDE01: USBPOW - Power/Control Register

Bit	Field Name	Reset	R/W	Description
7	ISO_WAIT_SOF	0	R/W	When this bit is set to 1, the USB controller will send zero length data packets from the time `INPKT_RDY` is asserted and until the first SOF token has been received. This only applies to isochronous endpoints.
6:4		-	R0	Not used
3	RST	0	R	During reset signaling, this bit is set to1
2	RESUME	0	R/W	Drive resume signaling for remote wakeup. According to the USB Specification the duration of driving resume must be at least 1 ms and no more than 15 ms. It is recommended to keep this bit set for approximately 10 ms.
1	SUSPEND	0	R	Suspend mode entered. This bit will only be used when `SUSPEND_EN`=1. Reading the `USBCIF` register or asserting `RESUME` will clear this bit.
0	SUSPEND_EN	0	R/W	Suspend Enable. When this bit is set to 1, suspend mode will be entered when USB bus has been idle for 3 ms.

0xDE02: USBIIF - IN Endpoints and EP0 Interrupt Flags

Bit	Field Name	Reset	R/W	Description
7:6		00	R0	Reserved
5	INEP5IF	0	R H0	Interrupt flag for IN endpoint 5. Cleared by HW when read
4	INEP4IF	0	R H0	Interrupt flag for IN endpoint 4. Cleared by HW when read
3	INEP3IF	0	R H0	Interrupt flag for IN endpoint 3. Cleared by HW when read
2	INEP2IF	0	R H0	Interrupt flag for IN endpoint 2. Cleared by HW when read
1	INEP1IF	0	R H0	Interrupt flag for IN endpoint 1. Cleared by HW when read
0	EP0IF	0	R H0	Interrupt flag for endpoint 0. Cleared by HW when read

0xDE04: USBOIF - Out Endpoints Interrupt Flags

Bit	Field Name	Reset	R/W	Description
7:6		00	R0	Reserved
5	OUTEP5IF	0	R H0	Interrupt flag for OUT endpoint 5. Cleared by HW when read
4	OUTEP4IF	0	R H0	Interrupt flag for OUT endpoint 4. Cleared by HW when read
3	OUTEP3IF	0	R H0	Interrupt flag for OUT endpoint 3. Cleared by HW when read
2	OUTEP2IF	0	R H0	Interrupt flag for OUT endpoint 2. Cleared by HW when read
1	OUTEP1IF	0	R H0	Interrupt flag for OUT endpoint 1. Cleared by HW when read
0		-	R0	Not used

0xDE06: USBCIF - Common USB Interrupt Flags

Bit	Field Name	Reset	R/W	Description
7:4		-	R0	Not used
3	SOFIF	0	R H0	Start-Of-Frame interrupt flag. Cleared by HW when read
2	RSTIF	0	R H0	Reset interrupt flag. Cleared by HW when read
1	RESUMEIF	0	R H0	Resume interrupt flag. Cleared by HW when read
0	SUSPENDIF	0	R H0	Suspend interrupt flag. Cleared by HW when read

0xDE07: USBIIE - IN Endpoints and EP0 Interrupt Enable Mask

Bit	Field Name	Reset	R/W	Description	
7:6		00	R/W	Reserved. Always write 00	
5	INEP5IE	1	R/W	IN endpoint 5 interrupt enable	
				0	Interrupt disabled
				1	Interrupt enabled
4	INEP4IE	1	R/W	IN endpoint 4 interrupt enable	
				0	Interrupt disabled
				1	Interrupt enabled
3	INEP3IE	1	R/W	IN endpoint 3 interrupt enable	
				0	Interrupt disabled
				1	Interrupt enabled
2	INEP2IE	1	R/W	IN endpoint 2 interrupt enable	
				0	Interrupt disabled
				1	Interrupt enabled
1	INEP1IE	1	R/W	IN endpoint 1 interrupt enable	
				0	Interrupt disabled
				1	Interrupt enabled
0	EP0IE	1	R/W	Endpoint 0 interrupt enable	
				0	Interrupt disabled
				1	Interrupt enabled

0xDE09: USBOIE - Out Endpoints Interrupt Enable Mask

Bit	Field Name	Reset	R/W	Description
7:6		00	R/W	Reserved. Always write 00
5	OUTEP5IE	1	R/W	OUT endpoint 5 interrupt enable 0 Interrupt disabled 1 Interrupt enabled
4	OUTEP4IE	1	R/W	OUT endpoint 4 interrupt enable 0 Interrupt disabled 1 Interrupt enabled
3	OUTEP3IE	1	R/W	OUT endpoint 3 interrupt enable 0 Interrupt disabled 1 Interrupt enabled
2	OUTEP2IE	1	R/W	OUT endpoint 2 interrupt enable 0 Interrupt disabled 1 Interrupt enabled
1	OUTEP1IE	1	R/W	OUT endpoint 1 interrupt enable 0 Interrupt disabled 1 Interrupt enabled
0		-	R0	Not used

0xDE0B: USBCIE - Common USB Interrupt Enable Mask

Bit	Field Name	Reset	R/W	Description
7:4		-	R0	Not used
3	SOFIE	0	R/W	Start-Of-Frame interrupt enable 0 Interrupt disabled 1 Interrupt enabled
2	RSTIE	1	R/W	Reset interrupt enable 0 Interrupt disabled 1 Interrupt enabled
1	RESUMEIE	1	R/W	Resume interrupt enable 0 Interrupt disabled 1 Interrupt enabled
0	SUSPENDIE	0	R/W	Suspend interrupt enable 0 Interrupt disabled 1 Interrupt enabled

0xDE0C: USBFRML - Current Frame Number (Low byte)

Bit	Field Name	Reset	R/W	Description
7:0	FRAME[7:0]	0x00	R	Low byte of 11-bit frame number

0xDE0D: USBFRMH - Current Frame Number (High byte)

Bit	Field Name	Reset	R/W	Description
7:3		-	R0	Not used
2:0	FRAME[10:8]	000	R	3 MSB of 11-bit frame number

0xDE0E: USBINDEX - Current Endpoint Index Register

Bit	Field Name	Reset	R/W	Description
7:4		-	R0	Not used
3:0	USBINDEX[3:0]	0000	R/W	Endpoint selected. Must be set to value in the range 0 - 5

0xDE10: USBMAXI - Max. Packet Size for IN Endpoint{1 - 5}

Bit	Field Name	Reset	R/W	Description
7:0	USBMAXI[7:0]	0x00	R/W	Maximum packet size in units of 8 bytes for IN endpoint selected by `USBINDEX` register. The value of this register should correspond to the *wMaxPacketSize* field in the Standard Endpoint Descriptor for the endpoint. This register must not be set to a value grater than the available FIFO memory for the endpoint.

0xDE11: USBCS0 - EP0 Control and Status (`USBINDEX=0`)

Bit	Field Name	Reset	R/W	Description
7	CLR_SETUP_END	0	R/W H0	Set this bit to 1 to de-assert the `SETUP_END` bit of this register. This bit will be cleared automatically.
6	CLR_OUTPKT_RDY	0	R/W H0	Set this bit to 1 to de-assert the `OUTPKT_RDY` bit of this register. This bit will be cleared automatically.
5	SEND_STALL	0	R/W H0	Set this bit to 1 to terminate the current transaction. The USB controller will send the STALL handshake and this bit will be de-asserted.
4	SETUP_END	0	R	This bit is set if the control transfer ends due to a premature end of control transfer. The FIFO will be flushed and an interrupt request (EP0) will be generated if the interrupt is enabled. Setting `CLR_SETUP_END=1` will de-assert this bit
3	DATA_END	0	R/W H0	This bit is used to signal the end of a data transfer and must be asserted in the following three situations: 1 When the last data packet has been loaded and `USBCS0.INPKT_RDY` is set to 1 2 When the last data packet has been unloaded and `USBCS0.CLR_OUTPKT_RDY` is set to 1 3 When `USBCS0.INPKT_RDY` has been asserted without having loaded the FIFO (for sending a zero length data packet). The USB controller will clear this bit automatically
2	SENT_STALL	0	R/W H1	This bit is set when a STALL handshake has been sent. An interrupt request (EP0) will be generated if the interrupt is enabled This bit must be cleared from firmware.
1	INPKT_RDY	0	R/W H0	Set this bit when a data packet has been loaded into the EP0 FIFO to notify the USB controller that a new data packet is ready to be transferred. When the data packet has been sent, this bit is cleared and an interrupt request (EP0) will be generated if the interrupt is enabled.
0	OUTPKT_RDY	0	R	Data packet received. This bit is set when an incoming data packet has been placed in the OUT FIFO. An interrupt request (EP0) will be generated if the interrupt is enabled. Set `CLR_OUTPKT_RDY=1` to de-assert this bit.

0xDE11: USBCSIL - IN EP{1 - 5} Control and Status Low

Bit	Field Name	Reset	R/W	Description
7		-	R0	Not used
6	CLR_DATA_TOG	0	R/W H0	Setting this bit will reset the data toggle to 0. Thus, setting this bit will force the next data packet to be a DATA0 packet. This bit is automatically cleared.
5	SENT_STALL	0	R/W	This bit is set when a STALL handshake has been sent. The FIFO will be flushed and the `INPKT_RDY` bit in this register will be de-asserted. An interrupt request (IN EP{1 - 5}) will be generated if the interrupt is enabled. This bit must be cleared from firmware.
4	SEND_STALL	0	R/W	Set this bit to 1 to make the USB controller reply with a STALL handshake when receiving IN tokens. Firmware must clear this bit to end the STALL condition. It is not possible to stall an isochronous endpoint, thus this bit will only have effect if the IN endpoint is configured as bulk/interrupt.
3	FLUSH_PACKET	0	R/W H0	Set to 1 to flush next packet that is ready to transfer from the IIN FIFO. The `INPKT_RDY` bit in this register will be cleared. If there are two packets in the IN FIFO due to double buffering, this bit must be set twice to completely flush the IN FIFO. This bit is automatically cleared.
2	UNDERRUN	0	R/W	In isochronous mode, this bit is set if an IN token is received when `INPKT_RDY=0`, and a zero length data packet is transmitted in response to the IN token. In Bulk/Interrupt mode, this bit is set when a NAK is returned in response to an IN token. Firmware should clear this bit.
1	PKT_PRESENT	0	R	This bit is 1 when there is at least one packet in the IN FIFO.
0	INPKT_RDY	0	R/W H0	Set this bit when a data packet has been loaded into the IN FIFO to notify the USB controller that a new data packet is ready to be transferred. When the data packet has been sent, this bit is cleared and an interrupt request (IN EP{1 - 5}) will be generated if the interrupt is enabled.

0xDE12: USBCSIH - IN EP{1 - 5} Control and Status High

Bit	Field Name	Reset	R/W	Description
7	AUTOSET	0	R/W	When this bit is 1, the `USBCSIL.INPKT_RDY` bit is automatically asserted when a data packet of maximum size (specified by `USBMAXI`) has been loaded into the IN FIFO.
6	ISO	0	R/W	Selects IN endpoint type 0 Bulk/Interrupt 1 Isochronous
5:4		10	R/W	Reserved. Always write 10
3	FORCE_DATA_TOG	0	R/W	Setting this bit will force the IN endpoint data toggle to switch and the data packet to be flushed from the IN FIFO even though an ACK was received. This feature can be useful when reporting rate feedback for isochronous endpoints.
2:1		-	R0	Not used
0	IN_DBL_BUF	0	R/W	Double buffering enable (IN FIFO) 0 Double buffering disabled 1 Double buffering enabled

0xDE13: USBMAXO - Max. Packet Size for OUT{1 - 5} Endpoint

Bit	Field Name	Reset	R/W	Description
7:0	USBMAXO[7:0]	0x00	R/W	Maximum packet size in units of 8 bytes for OUT endpoint selected by `USBINDEX` register. The value of this register should correspond to the *wMaxPacketSize* field in the Standard Endpoint Descriptor for the endpoint. This register must not be set to a value grater than the available FIFO memory for the endpoint.

0xDE14: USBCSOL - OUT EP{1 - 5} Control and Status Low

Bit	Field Name	Reset	R/W	Description
7	CLR_DATA_TOG	0	R/W H0	Setting this bit will reset the data toggle to 0. Thus, setting this bit will force the next data packet to be a DATA0 packet. This bit is automatically cleared.
6	SENT_STALL	0	R/W	This bit is set when a STALL handshake has been sent. An interrupt request (OUT EP{1 - 5}) will be generated if the interrupt is enabled. This bit must be cleared from firmware
5	SEND_STALL	0	R/W	Set this bit to 1 to make the USB controller reply with a STALL handshake when receiving OUT tokens. Firmware must clear this bit to end the STALL condition. It is not possible to stall an isochronous endpoint, thus this bit will only have effect if the IN endpoint is configured as bulk/interrupt.
4	FLUSH_PACKET	0	R/W H0	Set to 1 to flush next packet that is to be read from the OUT FIFO. The `OUTPKT_RDY` bit in this register will be cleared. If there are two packets in the OUT FIFO due to double buffering, this bit must be set twice to completely flush the OUT FIFO. This bit is automatically cleared.
3	DATA_ERROR	0	R	This bit is set if there is a CRC or bit-stuff error in the packet received. Cleared when OUTPKT_RDY is cleared. This bit will only be valid if the OUT endpoint is isochronous.
2	OVERRUN	0	R/W	This bit is set when an OUT packet cannot be loaded into the OUT FIFO. Firmware should clear this bit. This bit is only valid in isochronous mode
1	FIFO_FULL	0	R	This bit is asserted when no more packets can be loaded into the OUT FIFO full.
0	OUTPKT_RDY	0	R/W	This bit is set when a packet has been received and is ready to be read from OUT FIFO. An interrupt request (OUT EP{1 - 5}) will be generated if the interrupt is enabled. This bit should be cleared when the packet has been unloaded from the FIFO.

0xDE15: USBCSOH - OUT EP{1 - 5} Control and Status High

Bit	Field Name	Reset	R/W	Description
7	AUTOCLEAR	0	R/W	When this bit is set to 1, the `USBCSOL.OUTPKT_RDY` bit is automatically cleared when a data packet of maximum size (specified by `USBMAXO`) has been unloaded to the OUT FIFO.
6	ISO	0	R/W	Selects OUT endpoint type 0 Bulk/Interrupt 1 Isochronous
5:4		00	R/W	Reserved. Always write 00
3:1		-	R0	Not used
0	OUT_DBL_BUF	0	R/W	Double buffering enable (OUT FIFO) 0 Double buffering disabled 1 Double buffering enabled

0xDE16: USBCNT0 - Number of Received Bytes in EP0 FIFO (`USBINDEX=0`)

Bit	Field Name	Reset	R/W	Description
7:6		-	R0	Not used
5:0	USBCNT0[5:0]	000000	R	Number of received bytes into EP 0 FIFO. Only valid when OUTPKT_RDY is asserted

0xDE16: USBCNTL - Number of Bytes in EP{1 - 5} OUT FIFO Low

Bit	Field Name	Reset	R/W	Description
7:0	USBCNT[7:0]	0x00	R	8 LSB of number of received bytes into OUT FIFO selected by `USBINDEX` register. Only valid when `USBCSOL.OUTPKT_RDY` is asserted.

0xDE17: USBCNTH - Number of Bytes in EP{1 - 5} OUT FIFO High

Bit	Field Name	Reset	R/W	Description
7:3		-	R0	Not used
2:0	USBCNT[10:8]	000	R	3 MSB of number of received bytes into OUT FIFO selected by `USBINDEX` register. Only valid when `USBCSOL.OUTPKT_RDY` is set

0xDE20: USBF0 - Endpoint 0 FIFO

Bit	Field Name	Reset	R/W	Description
7:0	USBF0[7:0]	0x00	R/W	Endpoint 0 FIFO. Reading this register unloads one byte from the EP0 FIFO. Writing to this register loads one byte into the EP0 FIFO. *Note: The FIFO memory for EP0 is used for both incoming and outgoing data packets.*

0xDE22: USBF1 - Endpoint 1 FIFO

Bit	Field Name	Reset	R/W	Description
7:0	USBF1[7:0]	0x00	R/W	Endpoint 1 FIFO register. Reading this register unloads one byte from the EP1 OUT FIFO. Writing to this register loads one byte into the EP1 IN FIFO.

0xDE24: USBF2 - Endpoint 2 FIFO

Bit	Field Name	Reset	R/W	Description
7:0	USBF2[7:0]	0x00	R/W	See Endpoint 1 FIFO description.

0xDE26: USBF3 - Endpoint 3 FIFO

Bit	Field Name	Reset	R/W	Description
7:0	USBF3[7:0]	0x00	R/W	See Endpoint 1 FIFO description.

0xDE28: USBF4 - Endpoint 4 FIFO

Bit	Field Name	Reset	R/W	Description
7:0	USBF4[7:0]	0x00	R/W	See Endpoint 1 FIFO description.

0xDE2A: USBF5 - Endpoint 5 FIFO

Bit	Field Name	Reset	R/W	Description
7:0	USBF5[7:0]	0x00	R/W	See Endpoint 1 FIFO description.

13 Radio

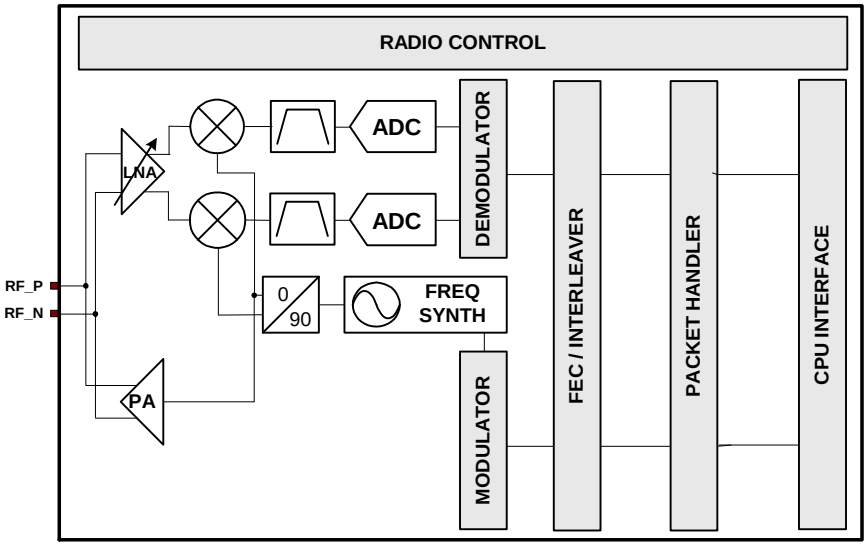

Figure 47: CC1110Fx/CC1111Fx Radio Module

A simplified block diagram of the radio module in the ***CC1110Fx/CC1111Fx*** is shown in Figure 47.

CC1110Fx/CC1111Fx features a low-IF receiver. The received RF signal is amplified by the low-noise amplifier (LNA) and down-converted in quadrature (I and Q) to the intermediate frequency (IF). At IF, the I/Q signals are digitized by the ADCs. Automatic gain control (AGC), fine channel filtering, demodulation bit/packet synchronization are performed digitally.

The transmitter part of ***CC1110Fx/CC1111Fx*** is based on direct synthesis of the RF frequency.

The frequency synthesizer includes a completely on-chip LC VCO and a 90 degrees phase shifter for generating the I and Q LO signals to the down-conversion mixers in receive mode.

The 26/48 MHz crystal oscillator generates the reference frequency for the synthesizer, as well as clocks for the ADC and the digital part.

An SFR interface is used for data buffer access from the CPU. Configuration and status registers are accessed through registers mapped to XDATA memory.

The digital baseband includes support for channel configuration, packet handling, and data buffering.

Note: In this section of the document, f_{Ref} is used to denote the reference frequency for the synthesizer.

For ***CC1110Fx*** $f_{ref} = f_{XOSC}$ *and for* ***CC1111Fx***, $f_{ref} = \frac{f_{XOSC}}{2}$

13.1 Command Strobes

The CPU uses a set of command strobes to control operation of the radio.

Command strobes may be viewed as single byte instructions which each start an internal sequence in the radio. These command strobes are used to enable the frequency synthesizer, enable receive mode, enable transmit mode, etc. (see Figure 48).

The 6 command strobes are listed in Table 61 on Page 187.

Note: An SIDLE strobe will clear all pending command strobes until IDLE state is reached. This means that if for example an SIDLE strobe is issued while the radio is in RX state, any other command strobes issued before the radio reached IDLE state will be ignored.

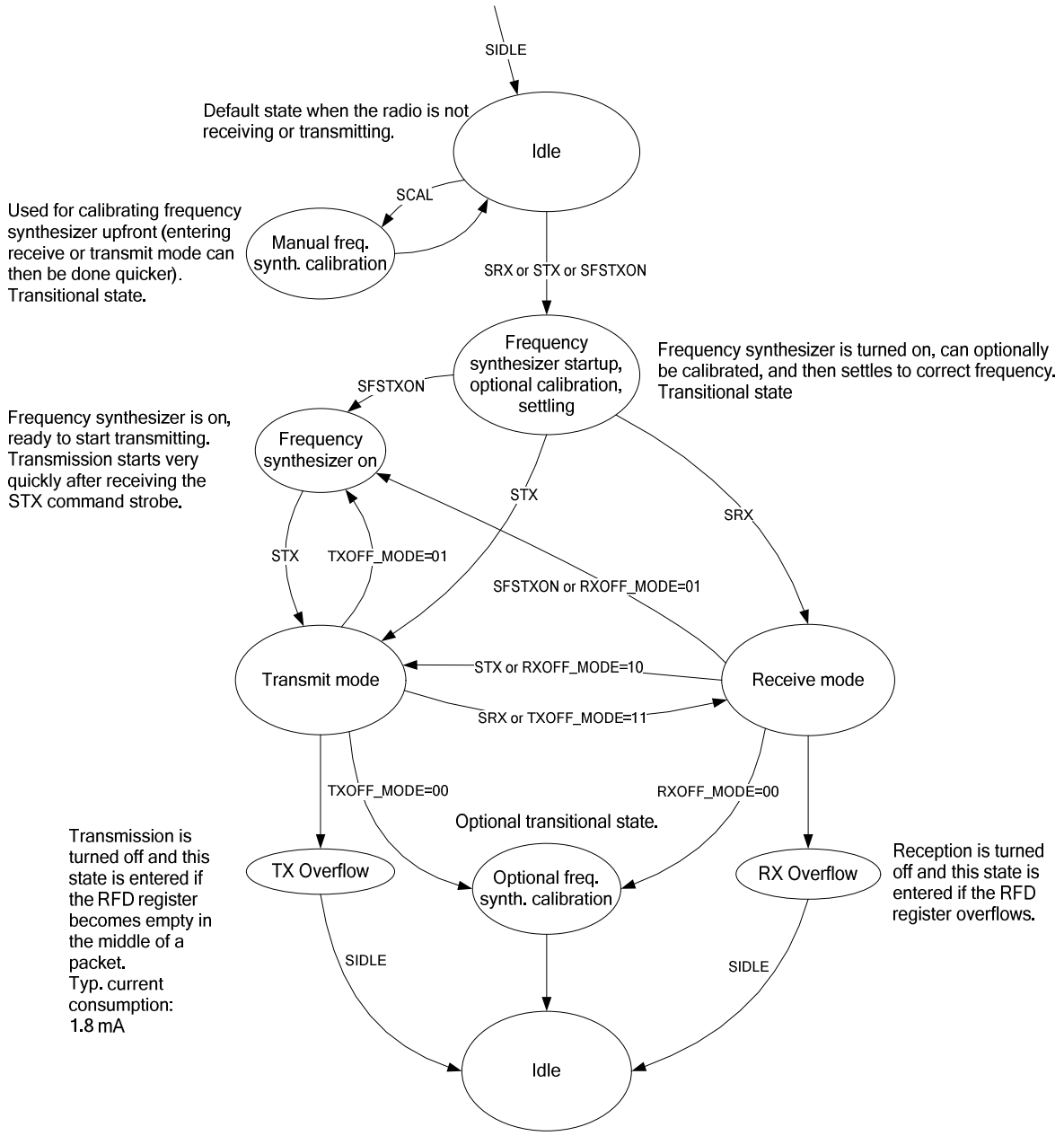

Figure 48: Simplified State Diagram with Typical Usage and Current Consumption in Radio at 250 kBaud Data Rate and `MDMCFG2.DEM_DCFILT_OFF=1` (current optimized)

RFST Value	Command Strobe Name	Description
0x00	SFSTXON	Enable and calibrate frequency synthesizer (if `MCSM0.FS_AUTOCAL=01`). If in RX (with CCA): Go to a wait state where only the synthesizer is running (for quick RX / TX turnaround).
0x01	SCAL	Calibrate frequency synthesizer and turn it off. `SCAL` can be strobed from IDLE mode without setting manual calibration mode (`MCSM0.FS_AUTOCAL=00`)
0x02	SRX	Enable RX. Perform calibration first if coming from IDLE and `MCSM0.FS_AUTOCAL=01`.
0x03	STX	In IDLE state: Enable TX. Perform calibration first if `MCSM0.FS_AUTOCAL=01`. If in RX state and CCA is enabled: Only go to TX if channel is clear.
0x04	SIDLE	Enter IDLE state (frequency synthesizer turned off).
All others	SNOP	No operation.

Table 61: Command Strobes

13.2 Radio Registers

The operation of the radio is configured through a set of RF registers. These RF registers are mapped to XDATA memory space as shown in Figure 14 on Page 43 .

In addition to configuration registers, the RF registers also provide status information from the radio.

Section 10.2.3.4 on Page 50 gives a full description of all RF registers.

13.3 Interrupts

There are two interrupt vector assigned to the radio. These are the RFTXRX interrupt (interrupt #0) and the RF interrupt (interrupt #16):

- RFTXRX: RX data ready or TX data complete (related to the `RFD` register)
- RF: All other general RF interrupts

The RF interrupt vector combines the interrupts shown in the `RFIM` register shown on Page 189. Note that these RF interrupts are rising-edge triggered meaning that an interrupt is generated when e.g. the SFD status flag goes from 0 to 1.

The RF interrupt flags are described in the next section.

13.3.1 Interrupt Registers

13.3.1.1 RFTXRX

The RFTXRX interrupt is related to the `RFD` register. The CPU interrupt flag `RFTXRXIF` found in the `TCON` register is asserted when there are data in the `RFD` register ready to be read (RX), and when a new byte can be written (TX). In TX, the `RFTXRXIF` flag will not be asserted before an STX strobe has been issued, meaning that one can not write to the `RFD` register before issuing an STX strobe.

For an interrupt request to be generated when `TCON.RFTXRXIF` is asserted, `IEN0.RFTXRXIE` must be 1.

> *Note: When append status is enabled, `PKTCTRL1.APPEND_STATUS=1`, reading status byte 1 (see Section 13.8) from the `RFD` register will trigger the assertion of the `RFTXRXIF` flag for status byte 2. If this flag is cleared AFTER reading status byte 1, the new flag will be cleared as well. One `RFTXRXIF` assertion will therefore be missed by software. After assertion of the `RFTXRXIF` flag one should therefore clear the flag BEFORE reading the `RFD` register.*

13.3.1.2 RF

There are 8 different events that can generate an RF interrupt request. These events are:

- TX underflow
- RX overflow
- RX timeout
- Packet received/transmitted. Also used to detect overflow/underflow conditions

- CS
- PQT reached
- CCA
- SFD

Each of these events has a corresponding interrupt flag in the `RFIF` register which is asserted when the event occurs. If the corresponding mask bit is set in the `RFIM` register, the CPU interrupt flag `S1CON.RFIF` will also be asserted in addition to the interrupt flag in `RFIF`. If `IEN2.RFIE=1` when `S1CON.RFIF` is asserted, and interrupt request will be generated.

Refer to 0 for details about the interrupts.

RFIF (0xE9) - RF Interrupt Flags

Bit	Field Name	Reset	R/W	Description	
7	IRQ_TXUNF	0	R/W0	TX underflow	
				0	No interrupt pending
				1	Interrupt pending
6	IRQ_RXOVF	0	R/W0	RX overflow	
				0	No interrupt pending
				1	Interrupt pending
5	IRQ_TIMEOUT	0	R/W0	RX timeout, no packet has been received in the programmed period	
				0	No interrupt pending
				1	Interrupt pending
4	IRQ_DONE	0	R/W0	Packet received/transmitted. Also used to detect underflow/overflow conditions	
				0	No interrupt pending
				1	Interrupt pending
3	IRQ_CS	0	R/W0	Carrier sense	
				0	No interrupt pending
				1	Interrupt pending
2	IRQ_PQT	0	R/W0	Preamble quality threshold reached	
				0	No interrupt pending
				1	Interrupt pending
1	IRQ_CCA	0	R/W0	Clear Channel Assessment	
				0	No interrupt pending
				1	Interrupt pending
0	IRQ_SFD	0	R/W0	Start of Frame Delimiter, sync word detected	
				0	No interrupt pending
				1	Interrupt pending

RFIM (0x91) - RF Interrupt Mask

Bit	Field Name	Reset	R/W	Description
7	IM_TXUNF	0	R/W	TX underflow
				0 Interrupt disabled
				1 Interrupt enabled
6	IM_RXOVF	0	R/W	RX overflow
				0 Interrupt disabled
				1 Interrupt enabled
5	IM_TIMEOUT	0	R/W	RX timeout, no packet has been received in the programmed period.
				0 Interrupt disabled
				1 Interrupt enabled
4	IM_DONE	0	R/W	Packet received/transmitted. Also used to detect underflow/overflow conditions
				0 Interrupt disabled
				1 Interrupt enabled
3	IM_CS	0	R/W	Carrier sense
				0 Interrupt disabled
				1 Interrupt enabled
2	IM_PQT	0	R/W	Preamble quality threshold reached.
				0 Interrupt disabled
				1 Interrupt enabled
1	IM_CCA	0	R/W	Clear Channel Assessment
				0 Interrupt disabled
				1 Interrupt enabled
0	IM_SFD	0	R/W	Start of Frame Delimiter, sync word detected
				0 Interrupt disabled
				1 Interrupt enabled

13.4 TX/RX Data Transfer

Data to transmit is written to the RF Data register, `RFD`. Received data is read from the same register. The `RFD` register can be viewed as a 1 byte FIFO. That means that if a byte is received in the `RFD` register, and it is not read before the next byte is received, the radio will enter RX_OVERFLOW state and the `RFIF.IRQ_RXOVF` flag will be set together with `RFIF.IRQ_DONE`. In TX, the radio will enter TX_UNDERFLOW state (`RFIF.IRQ_TXUVF` and `RFIF.IRQ_DONE` will be asserted) if too few bytes are written to the `RFD` register compared to what the radio expect. Note that if an STX strobe is issued but no data is written to the `RFD` register after the following assertion of the `RFTXRXIF` flag, the radio will start sending preamble without entering TX_UNDERFLOW state.

To exit RX_OVERFLOW and/or TX_UNDERFLOW state, an SIDLE strobe command should be issued.

> *Note: The `RFD` register content will not be retained in PM2 and PM3*

RX and TX FIFOs can be implemented in memory and it is recommended to use the DMA to transfer data between the FIFOs and the RF Data register, `RFD`. The DMA channel used to transfer received data to memory when the radio is in RX mode would have `RFD` as the source (`SRCADDR[15:0]`), the RX FIFO in memory as destination (`DRSTADDR[15:0]`), and RADIO as DMA trigger (`TRIG[4:0]`). For description on the usage of DMA, refer to Section 12.5 on Page 101.

A simple example of transmitting data is shown in Figure 49. This example does not use DMA.

```
; Transmit the following data: 0x02, 0x12, 0x34
; (Assume that the radio has already been configured, the high speed
; crystal oscillator is selected as system clock, and CLKCON.CLKSPD=000)

        MOV     RFST,#03H           ; Start TX with STX command strobe
C1:     JNB     RFTXRXIF,C1         ; Wait for interrupt flag telling radio is
        CLR     RFTXRXIF            ; ready to accept data, then write first
        MOV     RFD,#02H            ; data byte to radio (packet length = 2)
C2:     JNB     RFTXRXIF,C2         ; Wait for radio
        CLR     RFTXRXIF            ;
        MOV     RFD,#12H            ; Send first byte in payload
C3:     JNB     RFTXRXIF,C3         ; Wait for radio
        CLR     RFTXRXIF            ;
        MOV     RFD,#34H            ; Send second byte in payload
                                    ; Done
```

Figure 49: Simple RF Transmit Example

13.5 Data Rate Programming

The data rate used when transmitting, or the data rate expected in receive is programmed by the `MDMCFG3.DRATE_M` and the `MDMCFG4.DRATE_E` configuration registers. The data rate is given by the formula below.

$$R_{DATA} = \frac{(256 + DRATE_M) \cdot 2^{DRATE_E}}{2^{28}} \cdot f_{ref}$$

The following approach can be used to find suitable values for a given data rate:

$$DRATE_E = \left\lfloor \log_2\left(\frac{R_{DATA} \cdot 2^{20}}{f_{ref}}\right)\right\rfloor$$

$$DRATE_M = \frac{R_{DATA} \cdot 2^{28}}{f_{ref} \cdot 2^{DRATE_E}} - 256$$

If `DRATE_M` is rounded to the nearest integer and becomes 256, increment `DRATE_E` and use `DRATE_M=0`.

Note that the maximum data rate will be limited by the system clock speed. Please see 12.1.5.2 for more details.

13.6 Receiver Channel Filter Bandwidth

In order to meet different channel width requirements, the receiver channel filter is programmable. The `MDMCFG4.CHANBW_E` and `MDMCFG4.CHANBW_M` configuration registers control the receiver channel filter bandwidth. The following formula gives the relation between the register settings and the channel filter bandwidth:

$$BW_{channel} = \frac{f_{ref}}{8 \cdot (4 + CHANBW_M) \cdot 2^{CHANBW_E}}$$

For best performance, the channel filter bandwidth should be selected so that the signal bandwidth occupies at most 80% of the channel filter bandwidth. The channel centre tolerance due to crystal accuracy should also be subtracted from the signal bandwidth. The following example illustrates this:

With the channel filter bandwidth set to 500 kHz, the signal should stay within 80% of 500 kHz, which is 400 kHz. Assuming 915 MHz frequency and ±20 ppm frequency uncertainty for both the transmitting device and the receiving device, the total frequency uncertainty is ±40 ppm of 915 MHz, which is ±37 kHz. If the whole transmitted signal bandwidth is to be received within 400 kHz, the transmitted signal bandwidth should be maximum 400 kHz - 2·37 kHz, which is 326 kHz.

The ***CC1110Fx/CC1111Fx*** supports channel filter bandwidths shown in Table 62 and Table 63 respectively.

MDMCFG4.	MDMCFG4.CHANBW_E			
CHANBW_M	00	01	10	11
00	812	406	203	102
01	650	325	162	81
10	541	270	135	68
11	464	232	116	58

Table 62: Channel Filter Bandwidths [kHz] (assuming f_{ref} = 26 MHz)

MDMCFG4.	MDMCFG4.CHANBW_E			
CHANBW_M	00	01	10	11
00	750	375	188	94
01	600	300	150	75
10	500	250	125	63
11	429	214	107	54

Table 63: Channel Filter Bandwidths [kHz] (assuming f_{ref} = 24 MHz)

13.7 Demodulator, Symbol Synchronizer, and Data Decision

CC1110Fx/CC1111Fx contains an advanced and highly configurable demodulator. Channel filtering and frequency offset compensation is performed digitally. To generate the RSSI level (see Section 13.10.3 for more information) the signal level in the channel is estimated. Data filtering is also included for enhanced performance.

13.7.1 Frequency Offset Compensation

When using 2-FSK, GFSK, or MSK modulation, the demodulator will compensate for the offset between the transmitter and receiver frequency, within certain limits, by estimating the centre of the received data. This value is available in the `FREQEST` status register. Writing the value from `FREQEST` into `FSCTRL0.FREQOFF` the frequency synthesizer is automatically adjusted according to the estimated frequency offset.

The tracking range of the algorithm is selectable as fractions of the channel bandwidth with the `FOCCFG.FOC_LIMIT` configuration register.

If the `FOCCFG.FOC_BS_CS_GATE` bit is set, the offset compensator will freeze until carrier sense asserts. This may be useful when the radio is in RX for long periods with no traffic, since the algorithm may drift to the boundaries when trying to track noise.

The tracking loop has two gain factors, which affects the settling time and noise sensitivity of the algorithm. `FOCCFG.FOC_PRE_K` sets the gain before the sync word is detected, and `FOCCFG.FOC_POST_K` selects the gain after the sync word has been found.

Note that frequency offset compensation is not supported for ASK or OOK modulation.

13.7.2 Bit Synchronization

The bit synchronization algorithm extracts the clock from the incoming symbols. The algorithm requires that the expected data rate is programmed as described in Section 13.5 on Page 190. Re-synchronization is performed continuously to adjust for error in the incoming symbol rate.

13.7.3 Byte Synchronization

Byte synchronization is achieved by a continuous sync word search. The sync word is a 16 bit configurable field (can be repeated to get a 32 bit) that is automatically inserted at the start of the packet by the modulator in transmit mode. The demodulator uses this field to find the byte boundaries in the stream of bits. The sync word will also function as a system identifier since only packets with the correct predefined sync word will be received if the sync word detection in RX is enabled in register `MDMCFG2` (see Section 13.10.1). The sync word detector correlates against the user-configured 16 or 32 bit sync word. The correlation threshold can be set to 15/16, 16/16, or 30/32 bits match. The sync word can be further qualified using the preamble quality indicator mechanism described below and/or a carrier sense condition. The sync word is configured through the `SYNC1` and `SYNC0` registers and is sent MSB first.

In order to make false detections of sync words less likely, a mechanism called preamble quality indication (PQI) can be used to qualify the sync word. A threshold value for the preamble quality must be exceeded in order for a detected sync word to be accepted. See Section 13.10.2 on Page 196 for more details.

13.8 Packet Handling Hardware Support

The CC1110Fx/CC1111Fx has built-in hardware support for packet oriented radio protocols.

In transmit mode, the packet handler can be configured to add the following elements to the packet:

- A programmable number of preamble bytes
- A two byte synchronization (sync) word. Can be duplicated to give a 4-byte sync word (recommended). It is not possible to only insert preamble or only insert a sync word.
- A CRC checksum computed over the data field

The recommended setting is 4-byte preamble and 4-byte sync word, except for 500 kBaud data rate where the recommended preamble length is 8 bytes.

In addition, the following can be implemented on the data field and the optional 2-byte CRC checksum:

- Whitening of the data with a PN9 sequence.
- Forward error correction by the use of interleaving and coding of the data (convolutional coding).

In receive mode, the packet handling support will de-construct the data packet by implementing the following (if enabled):

- Preamble detection
- Sync word detection
- CRC computation and CRC check
- One byte address check
- Packet length check (length byte checked against a programmable maximum length)
- De-whitening
- De-interleaving and decoding

Optionally, two status bytes (see Table 64 and Table 65) with RSSI value, Link Quality Indication, and CRC status can be appended to the received packet.

Bit	Field Name	Description
7:0	RSSI	RSSI value

Table 64: Received Packet Status Byte 1 (first byte appended after the data)

Bit	Field name	Description
7	CRC_OK	1: CRC for received data OK (or CRC disabled) 0: CRC error in received data
6:0	LQI	The Link Quality Indicator estimates how easily a received signal can be demodulated

Table 65: Received Packet Status Byte 2 (second byte appended after the data)

Note that register fields that control the packet handling features should only be altered when CC1110Fx/CC1111Fx is in the IDLE state.

13.8.1 Data Whitening

From a radio perspective, the ideal over the air data are random and DC free. This results in the smoothest power distribution over the occupied bandwidth. This also gives the regulation loops in the receiver uniform operation conditions (no data dependencies).

Real world data often contain long sequences of zeros and ones. Performance can then be improved by whitening the data before transmitting, and de-whitening the data in the receiver. With CC1110Fx/CC1111Fx, this can be done automatically by setting `PKTCTRL0.WHITE_DATA=1`. All data, except the preamble and the sync word, are then XOR-ed with a 9-bit pseudo-random (PN9)

sequence before being transmitted as shown in Figure 50. At the receiver end, the data are XOR-ed with the same pseudo-random sequence. This way, the whitening is reversed, and the original data appear in the receiver. The PN9 sequence is reset to all 1's.

Data whitening can only be used when `PKTCTRL0.CC2400_EN=0` (default).

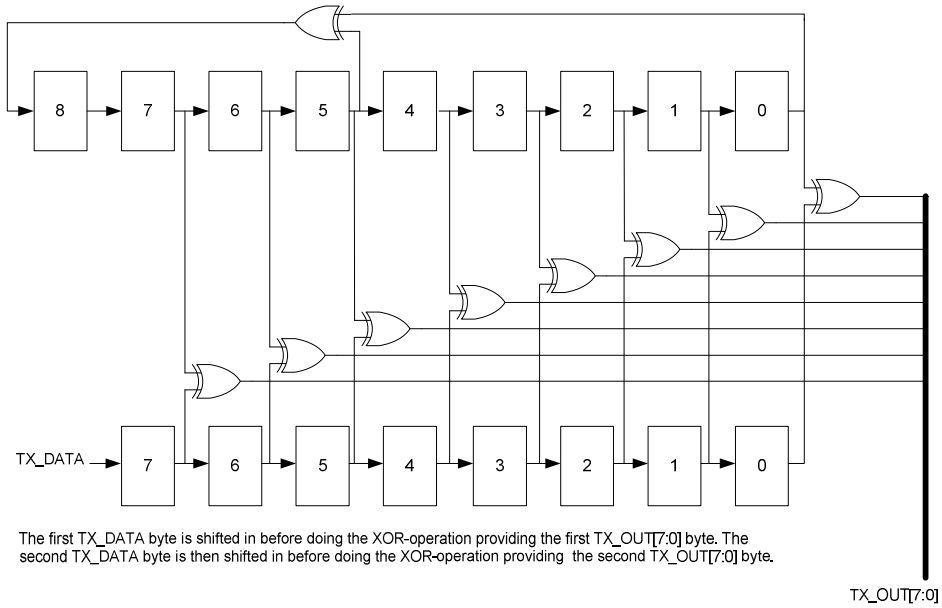

Figure 50: Data Whitening in TX Mode

13.8.2 Packet Format

The format of the data packet can be configured and consists of the following items:

- Preamble
- Synchronization word
- Length byte or constant programmable packet length
- Optional Address byte
- Payload
- Optional 2 byte CRC

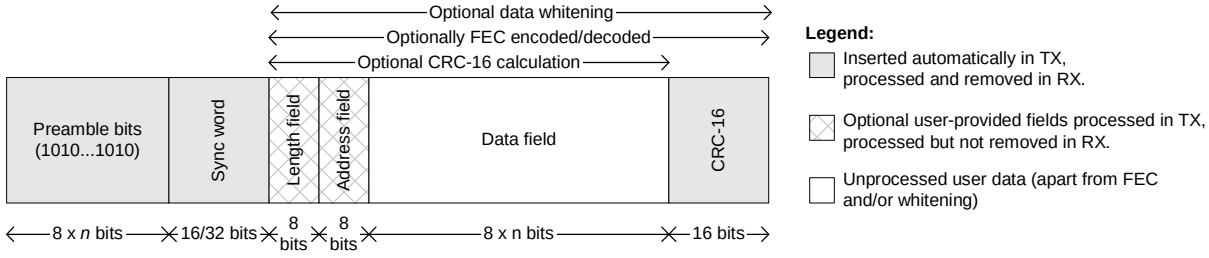

Figure 51: Packet Format

The preamble pattern is an alternating sequence of ones and zeros (101010101…). The minimum length of the preamble is programmable through the NUM_PREAMBLE field in the MDMCFG1 register. When enabling TX, the modulator will start transmitting the preamble. When the programmed number of preamble bytes have been transmitted, the modulator will send the sync word, and then data from the RFD register. If no data has been written to the RFD register when the radio is done transmitting the programmed number of preamble bytes, the modulator will continue to send preamble bytes until the first byte is written to RFD. It will then send the sync word followed by the data written to RFD.
The sync. word is a two-byte value set in the SYNC1 and SYNC0 registers. The sync word provides byte synchronization of the incoming packet. A one-byte sync word can be emulated by setting the SYNC1 value to the preamble pattern. It is also possible to emulate a 32 bit sync word by using MDMCFG2.SYNC_MODE set to 3 or 7. The sync word will then be repeated twice.

CC1110Fx/CC1111Fx supports both fixed packet length protocols and variable packet length protocols. Variable or fixed packet length mode can be used for packets up to 255 bytes.

Fixed packet length mode is selected by setting PKTCTRL0.LENGTH_CONFIG=0. The desired packet length is set by the PKTLEN register.

In variable packet length mode, PKTCTRL0.LENGTH_CONFIG=1, the packet length is configured by the first byte after the sync word. The packet length is defined as the payload data, excluding the length byte and the optional CRC. The PKTLEN register is used to set the maximum packet length allowed in RX. Any packet received with a length byte with a value greater than PKTLEN will be discarded.

13.8.3 Packet Filtering in Receive Mode

CC2500 supports two different types of packet-filtering: address filtering and maximum length filtering.

13.8.3.1 Address Filtering

Setting PKTCTRL1.ADR_CHK to any other value than zero enables the packet address filter. The packet handler engine will compare the destination address byte in the packet with the programmed node address in the ADDR register and the 0x00 broadcast address when PKTCTRL1.ADR_CHK=10 or both 0x00 and 0xFF broadcast addresses when PKTCTRL1.ADR_CHK=11. If the received address matches a valid address, the packet is accepted and the RFTXRXIF flag is asserted and a DMA trigger is generated. If the address match fails, the packet is discarded and receive mode restarted (regardless of the MCSM1.RXOFF_MODE setting). The RFIF.IRQ_DONE flag will be asserted but the DMA will not be triggered.

13.8.3.2 Maximum Length Filtering

In variable packet length mode, PKTCTRL0.LENGTH_CONFIG=1, the PKTLEN.PACKET_LENGTH register value is used to set the maximum allowed packet length. If the received length byte has a larger value than this, the packet is discarded and receive mode restarted (regardless of the MCSM1.RXOFF_MODE setting). The RFIF.IRQ_DONE flag will be asserted but the DMA will not be triggered.

13.8.4 Packet Handling in Transmit Mode

The payload that is to be transmitted must be written into RFD. The first byte written must be the length byte when variable packet length is enabled. The length byte has a value equal to the payload of the packet (including the optional address byte). If fixed packet length is enabled, then the first byte written to RFD is interpreted as the destination address, if this feature is enabled in the device that receives the packet.

The modulator will first send the programmed number of preamble bytes. If data has been written to RFD, the modulator will send the two-byte (optionally 4-byte) sync word and then the content of the RFD register. If CRC is enabled, the checksum is calculated over all the data pulled from the RFD register and the result is sent as two extra bytes following the payload data. If fewer bytes are written to the RFD registers than what the radio expects the radio will enter TX_UNDERFLOW state and the RFIF.IRQ_TXUNF flag will be set together with RFIF.IRQ_DONE. An SIDLE strobe needs to be issued to return to IDLE state.

If whitening is enabled, everything following the sync words will be whitened. This is done before the optional FEC/Interleaver stage. Whitening is enabled by setting PKTCTRL0.WHITE_DATA=1.

If FEC/Interleaving is enabled, everything following the sync words will be scrambled by the interleaver and FEC encoded before being modulated. FEC is enabled by setting `MDMCFG1.FEC_EN=1`.

13.8.5 Packet Handling in Receive Mode

In receive mode, the demodulator and packet handler will search for a valid preamble and the sync word. When found, the demodulator has obtained both bit and byte synchronism and will receive the first payload byte.

If FEC/Interleaving is enabled, the FEC decoder will start to decode the first payload byte. The interleaver will de-scramble the bits before any other processing is done to the data.

If whitening is enabled, the data will be de-whitened at this stage.

When variable packet length mode is enabled, the first byte is the length byte. The packet handler stores this value as the packet length and receives the number of bytes indicated by the length byte. If fixed packet length mode is used, the packet handler will accept the programmed number of bytes.

Next, the packet handler optionally checks the address and only continues the reception if the address matches. If automatic CRC check is enabled, the packet handler computes CRC and matches it with the appended CRC checksum.

At the end of the payload, the packet handler will optionally write two extra packet status bytes that contain CRC status, link quality indication and RSSI value.

If a byte is received in the `RFD` register, and it is not read before the next byte is received, the radio will enter RX_OVERFLOW state and the `RFIF.IRQ_RXOVF` flag will be set together with `RFIF.IRQ_DONE`. An SIDLE strobe needs to be issued to return to IDLE state.

13.9 Modulation Formats

CC1110Fx/CC1111Fx supports frequency and phase shift modulation formats. The desired modulation format is set in the `MDMCFG2.MOD_FORMAT` register.

Optionally, the data stream can be Manchester coded by the modulator and decoded by the demodulator. This option is enabled by setting `MDMCFG2.MANCHESTER_EN=1`.

> Note: Manchester encoding is not supported at the same time as using the FEC/Interleaver option or when using MSK modulation.

13.9.1 Frequency Shift Keying

2-FSK can optionally be shaped by a Gaussian filter with BT=1, producing a GFSK modulated signal.

When FSK/GFSK modulation is used the `DEVIATN` register specifies the expected frequency deviation of incoming signal in RX and should be the same as the TX deviation for demodulation to be performed reliably and robustly.

The frequency deviation is programmed with the `DEVIATION_M` and `DEVIATION_E` values in the `DEVIATN` register. The value has an exponent/mantissa form, and the resultant deviation is given by:

$$f_{dev} = \frac{f_{ref}}{2^{17}} \cdot (8 + DEVIATION_M) \cdot 2^{DEVIATION_E}$$

The symbol encoding is shown in Table 66.

Format	Symbol	Coding
2-FSK/GFSK	‘0’	–Deviation
	‘1’	+Deviation

Table 66: Symbol Encoding for 2-FSK/GFSK Modulation

13.9.2 Minimum Shift Keying

When using MSK[21], the complete transmission (preamble, sync word, and payload) will be MSK modulated.

Phase shifts are performed with a constant transition time.

The fraction of a symbol period used to change the phase can be modified with the `DEVIATN.DEVIATION_M` setting. This is equivalent to changing the shaping of the symbol.

The MSK modulation format implemented in **CC1110Fx/CC1111Fx** inverts the sync word and data compared to e.g. signal generators.

> *Note: The `DEVIATN` register setting has no effect in RX when using MSK. Also, when using MSK Manchester encoding/decoding should be disabled (`MDMCFG2.MANCHESTER_EN=0`)*

[21] Identical to offset QPSK with half-sine shaping (data coding may differ)

13.9.3 Amplitude Modulation

CC1110Fx/CC1111Fx supports two different forms of amplitude modulation: On-Off Keying (OOK) and Amplitude Shift Keying (ASK).

OOK modulation simply turns on or off the PA to modulate 1 and 0 respectively.

The ASK variant supported by the **CC1110Fx/CC1111Fx** allows programming of the modulation depth (the difference between 1 and 0), and shaping of the pulse amplitude. Pulse shaping will produce a more bandwidth constrained output spectrum.

> *Note: The `DEVIATN` register setting has no effect in either RX or TX when using OOK/ASK.*

13.10 Received Signal Qualifiers and Link Quality Information

CC1110Fx/CC1111Fx has several qualifiers that can be used to increase the likelihood that a valid sync word is detected.

13.10.1 Sync Word Qualifier

If sync word detection in RX is enabled in register `MDMCFG2` the **CC1110Fx/CC1111Fx** will not start writing received data to the `RFD` register and perform the packet filtering described in Section 13.8.3 before a valid sync word has been detected. The sync word qualifier mode is set by `MDMCFG2.SYNC_MODE` and is summarized in Table 67. Carrier sense in Table 67 is described in Section 13.10.4.

MDMCFG2. SYNC_MODE	Sync Word Qualifier Mode
000	No preamble/sync
001	15/16 sync word bits detected
010	16/16 sync word bits detected
011	30/32 sync word bits detected
100	No preamble/sync, carrier sense above threshold
101	15/16 + carrier sense above threshold
110	16/16 + carrier sense above threshold
111	30/32 + carrier sense above threshold

Table 67: Sync Word Qualifier mode

13.10.2 Preamble Quality Threshold (PQT)

The Preamble Quality Threshold (PQT) sync-word qualifier adds the requirement that the received sync word must be preceded with a preamble with a quality above a programmed threshold.

Another use of the preamble quality threshold is as a qualifier for the optional RX termination

timer. See Section 13.12.3 on Page 204 for details.

The preamble quality estimator increases an internal counter by one each time a bit is received that is different from the previous bit, and decreases the counter by 8 each time a bit is received that is the same as the last bit. The threshold is configured with the register field `PKTCTRL1.PQT`. A threshold of 4·`PQT` for this counter is used to gate sync word detection. By setting the value to zero, the preamble quality qualifier of the sync word is disabled.

A "Preamble Quality Reached" signal can be observed on `P1_5`, `P1_6`, or `P1_7` by setting `IOCFGx.GDOx_CFG=1000`. It is also possible to determine if preamble quality is reached by checking the `PQT_REACHED` bit in the `PKTSTATUS` register. This signal / bit asserts when the received signal exceeds the PQT.

13.10.3 RSSI

The RSSI value is an estimate of the signal level in the chosen channel. This value is based on the current gain setting in the RX chain and the measured signal level in the channel.

In RX mode, the RSSI value can be read continuously from the RSSI status register until the demodulator detects a sync word (when sync word detection is enabled). At that point the RSSI readout value is frozen until the next time the chip enters the RX state.

> *Note: It takes some time from the radio enters RX mode until a valid RSSI value is present in the `RSSI` register. Please see DN505 [16] for details on how the RSSI response time can be estimated.*

The RSSI value is in dBm with ½ dB resolution. The RSSI update rate, f_{RSSI}, depends on the receiver filter bandwidth ($BW_{channel}$ defined in Section 13.6) and `AGCCTRL0.FILTER_LENGTH`.

$$f_{RSSI} = \frac{2 \cdot BW_{channel}}{8 \cdot 2^{FILTER_LENGTH}}$$

If `PKTCTRL1.APPEND_STATUS` is enabled the RSSI value at sync word detection is automatically added to the first byte appended after the data payload.

The RSSI value read from the RSSI status register is a 2's complement number. The following procedure can be used to convert the RSSI reading to an absolute power level (RSSI_dBm).

1) Read the RSSI status register
2) Convert the reading from a hexadecimal number to a decimal number (RSSI_dec)
3) If RSSI_dec ≥ 128 then RSSI_dBm = (RSSI_dec – 256)/2 – RSSI_offset
4) Else if RSSI_dec < 128 then RSSI_dBm = (RSSI_dec)/2 – RSSI_offset

Table 68 provides typical values for the RSSI_offset.

Figure 52 and Figure 53 shows typical plots of RSSI readings as a function of input power level for different data rates.

Data rate [kBaud]	RSSI_offset [dB], 315 MHz	RSSI_offset [dB], 433 MHz	RSSI_offset [dB], 868 MHz
1.2	74	75	73
38.4	73	74	73
250	74	73	77

Table 68: Typical RSSI_offset Values

Figure 52 and Figure 53 show typical plots of RSSI readings as a function of input power level for different data rates.

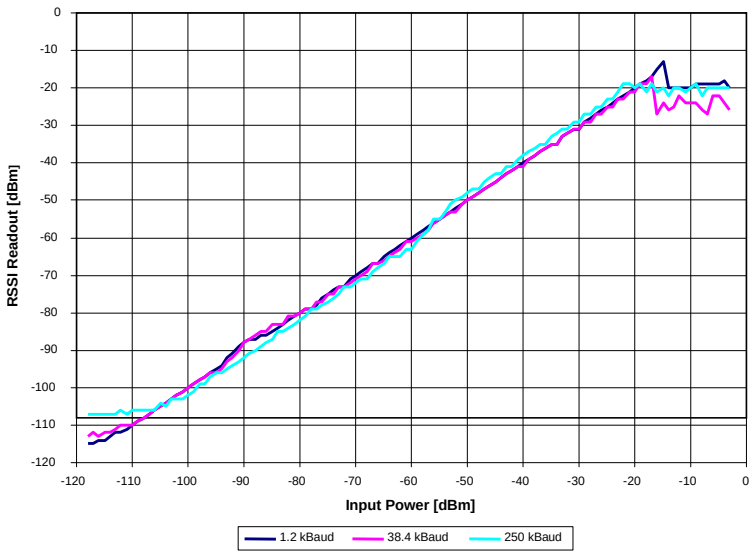

Figure 52: Typical RSSI Value vs. Input Power Level for Different Data Rates at 433 MHz

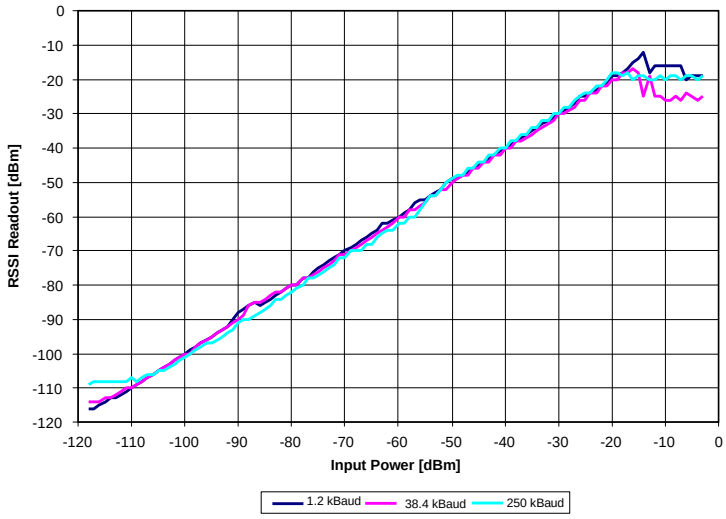

Figure 53: Typical RSSI Value vs. Input Power Level for Different Data Rates at 868 MHz

13.10.4 Carrier Sense (CS)

The Carrier Sense (CS) flag is used as a sync word qualifier and for CCA. The CS flag can be set based on two conditions, which can be individually adjusted:

- CS is asserted when the RSSI is above a programmable absolute threshold, and de-asserted when RSSI is below the same threshold (with hysteresis).
- CS is asserted when the RSSI has increased with a programmable number of dB from one RSSI sample to the next, and de-asserted when RSSI has decreased with the same number of dB. This setting is not dependent on the absolute signal level and is thus useful to detect signals in environments with a time varying noise floor.

Carrier Sense can be used as a sync word qualifier that requires the signal level to be higher than the threshold for a sync word search to be performed. The signal can also be observed on P1_5, P1_6, or P1_7 by setting IOCFGx.GDOx_CFG=1110 and in the status register bit PKTSTATUS.CS.

Other uses of Carrier Sense include the TX-if-CCA function (see Section 13.10.7 on Page 200) and the optional fast RX termination (see Section 13.12.3 on Page 204).

CS can be used to avoid interference from other RF sources in the ISM bands.

13.10.5 CS Absolute Threshold

The absolute threshold related to the RSSI value depends on the following register fields:

- AGCCTRL2.MAX_LNA_GAIN
- AGCCTRL2.MAX_DVGA_GAIN
- AGCCTRL1.CARRIER_SENSE_ABS_THR
- AGCCTRL2.MAGN_TARGET

For a given AGCCTRL2.MAX_LNA_GAIN and AGCCTRL2.MAX_DVGA_GAIN setting the absolute threshold can be adjusted ±7 dB in steps of 1 dB using CARRIER_SENSE_ABS_THR.

The MAGN_TARGET setting is a compromise between blocker tolerance/selectivity and sensitivity. The value sets the desired signal level in the channel into the demodulator. Increasing this value reduces the headroom for blockers, and therefore close-in selectivity. It is strongly recommended to use SmartRF® Studio [9] to generate the correct MAGN_TARGET setting. Table 69 and Table 70 show the typical RSSI readout values at the CS threshold at 2.4 kBaud and 250 kBaud data rate respectively. The default CARRIER_SENSE_ABS_THR=0 (0 dB) and MAGN_TARGET=11 (33 dB) have been used.

For other data rates the user must generate similar tables to find the CS absolute threshold.

		MAX_DVGA_GAIN[1:0]			
		00	01	10	11
MAX_LNA_GAIN[2:0]	000	–99	–93	–87	–81.5
	001	–97	–90.5	–85	–78.5
	010	–93.5	–87	–82	–76
	011	–91.5	–86	–80	–74
	100	–90.5	–84	–78	–72.5
	101	–88	–82.5	–76	–70
	110	–84.5	–78.5	–73	–67
	111	–82.5	–76	–70	–64

Table 69: Typical RSSI Value in dBm at CS Threshold with Default MAGN_TARGET at 2.4 kBaud

		MAX_DVGA_GAIN[1:0]			
		00	01	10	11
MAX_LNA_GAIN[2:0]	000	–96	–90	–84	–78.5
	001	–94.5	–89	–83	–77.5
	010	–92.5	–87	–81	–75
	011	–91	–85	–78.5	–73
	100	–87.5	–82	–76	–70
	101	–85	–79.5	–73.5	–67.5
	110	–83	–76.5	–70.5	–65
	111	–78	–72	–66	–60

Table 70: Typical RSSI Value in dBm at CS Threshold with Default MAGN_TARGET at 250 kBaud

If the threshold is set high, i.e. only strong signals are wanted, the threshold should be adjusted upwards by first reducing the MAX_LNA_GAIN value and then the MAX_DVGA_GAIN value. This will reduce power consumption in the receiver front end, since the highest gain settings are avoided.

13.10.6 CS Relative Threshold

The relative threshold detects sudden changes in the measured signal level. This setting is not dependent on the absolute signal level and is thus useful to detect signals in environments with a time varying noise floor. The register field AGCCTRL1.CARRIER_SENSE_REL_THR is used to enable/disable relative CS, and to select threshold of 6 dB, 10 dB or 14 dB RSSI change

13.10.7 Clear Channel Assessment (CCA)

The Clear Channel Assessment CCA) is used to indicate if the current channel is free or busy. The current CCA state is viewable on P1_5, P1_6, or P1_7 by setting `IOCFGx.GDOx_CFG=1001`.

`MCSM1.CCA_MODE` selects the mode to use when determining CCA.

When the `STX` or `SFSTXON` command strobe is given while **CC1110Fx/CC1111Fx** is in the RX state, the TX or FSTXON state is only entered if the clear channel requirements are fulfilled. The chip will otherwise remain in RX (if the channel becomes available, the radio will not enter TX or FSTXON state before a new strobe command is being issued). This feature is called TX-if-CCA. Note that when using this function the register `TEST1` on Page 225 should be set to `0x31`.

Four CCA requirements can be programmed:

- Always (CCA disabled, always goes to TX)
- If RSSI is below threshold
- Unless currently receiving a packet
- Both the above (RSSI below threshold and not currently receiving a packet)

13.10.8 Link Quality Indicator (LQI)

The Link Quality Indicator is a metric of the current quality of the received signal. If `PKTCTRL1.APPEND_STATUS` is enabled, the value is automatically added to the last byte appended after the payload. The value can also be read from the `LQI` status register. The LQI gives an estimate of how easily a received signal can be demodulated by accumulating the magnitude of the error between ideal constellations and the received signal over the 64 symbols immediately following the sync word. LQI is best used as a relative measurement of the link quality (a high value indicates a better link than what a low value does), since the value is dependent on the modulation format.

13.11 Forward Error Correction with Interleaving

13.11.1 Forward Error Correction (FEC)

CC1110Fx/CC1111Fx has built in support for Forward Error Correction (FEC). To enable this option, set `MDMCFG1.FEC_EN` to 1. FEC is only supported in fixed packet length mode (`PKTCTRL0.LENGTH_CONFIG=0`). FEC is employed on the data field and CRC word in order to reduce the gross bit error rate when operating near the sensitivity limit. Redundancy is added to the transmitted data in such a way that the receiver can restore the original data in the presence of some bit errors.

The use of FEC allows correct reception at a lower SNR, thus extending communication range. Alternatively, for a given SNR, using FEC decreases the bit error rate (BER). As the packet error rate (PER) is related to BER by:

$$PER = 1 - (1 - BER)^{packet_length},$$

a lower BER can be used to allow longer packets, or a higher percentage of packets of a given length, to be transmitted successfully. Finally, in realistic ISM radio environments, transient and time-varying phenomena will produce occasional errors even in otherwise good reception conditions. FEC will mask such errors and, combined with interleaving of the coded data, even correct relatively long periods of faulty reception (burst errors).

The FEC scheme adopted for **CC1110Fx/CC1111Fx** is convolutional coding, in which *n* bits are generated based on *k* input bits and the *m* most recent input bits, forming a code stream able to withstand a certain number of bit errors between each coding state (the *m*-bit window).

The convolutional coder is a rate 1/2 code with a constraint length of m=4. The coder codes one input bit and produces two output bits; hence, the effective data rate is halved. I.e. to transmit at the same effective data rate when using FEC, it is necessary to use twice as high over-the-air data rate. This will require a higher receiver bandwidth, and thus reduce sensitivity. In other words, the improved reception by using FEC and the degraded sensitivity from a higher receiver bandwidth will be counteracting factors.

13.11.2 Interleaving

Data received through radio channels will often experience burst errors due to interference and time-varying signal strengths. In order to increase the robustness to errors spanning

multiple bits, interleaving is used when FEC is enabled. After de-interleaving, a continuous span of errors in the received stream will become single errors spread apart.

CC1110Fx/CC1111Fx employs matrix interleaving, which is illustrated in Figure 54. The on-chip interleaving and de-interleaving buffers are 4 x 4 matrices. In the transmitter, the data bits from the rate ½ convolutional coder are written into the rows of the matrix, whereas the bit sequence to be transmitted is read from the columns of the matrix. In the receiver, the received symbols are written into the rows of the matrix, whereas the data passed onto the convolutional decoder is read from the columns of the matrix.

When FEC and interleaving is used at least one extra byte is required for trellis termination. In addition, the amount of data transmitted over the air must be a multiple of the size of the interleaver buffer (two bytes). The packet control hardware therefore automatically inserts one or two extra bytes at the end of the packet, so that the total length of the data to be interleaved is an even number. Note that these extra bytes are invisible to the user, as they are removed before the received packet enters the `RFD` data register.

When FEC and interleaving is used the minimum data payload is 2 bytes.

Note: When using FEC (`MDMCFG1.FEC_EN=1`), `CLKCON.CLKSPD` must be set to 000.

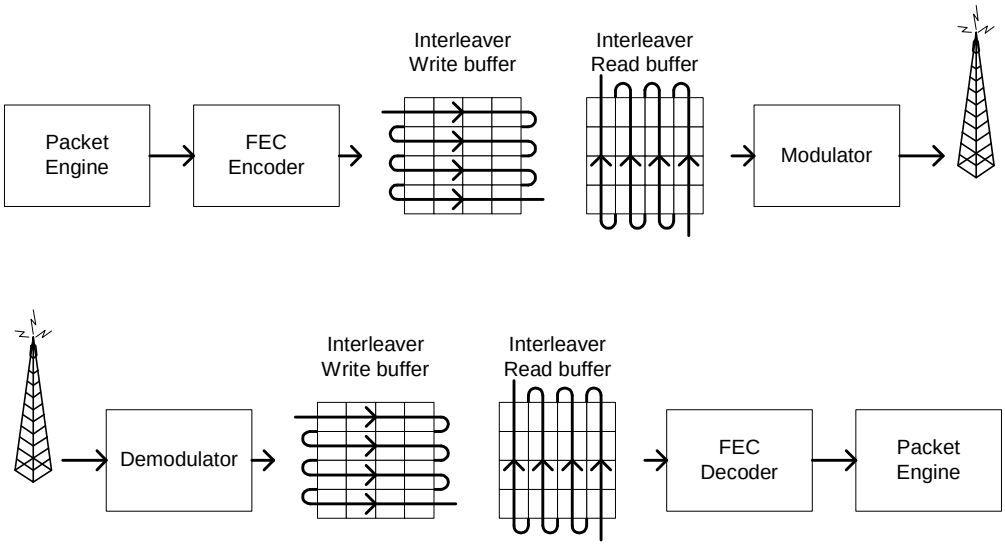

Figure 54: General Principle of Matrix Interleaving

13.12 Radio Control

CC1110Fx/CC1111Fx has a built-in state machine that is used to switch between different operation states (modes). The change of state is done either by using command strobes or by internal events such as TX FIFO underflow.

A simplified state diagram, together with typical usage and current consumption, is shown in Figure 48 on Page 186. The complete radio control state diagram is shown in Figure 55. The numbers refer to the state number readable in the `MARCSTATE` status register. This register is primarily for test purposes.

Figure 55: Complete Radio Control State Diagram

13.12.1 Active Modes

The radio has two active modes: receive and transmit. These modes are activated directly by writing the SRX and STX command strobes to the RFST register.

The frequency synthesizer must be calibrated regularly. CC1110Fx/CC1111Fx has one manual calibration option (using the SCAL strobe), and three automatic calibration options, controlled by the MCSM0.FS_AUTOCAL setting:

- Calibrate when going from IDLE to either RX or TX (or FSTXON)
- Calibrate when going from either RX or TX to IDLE automatically
- Calibrate every fourth time when going from either RX or TX to IDLE automatically

If the radio goes from TX or RX to IDLE by issuing an SIDLE strobe, calibration will not be performed. The calibration takes a constant number of XOSC cycles (see Table 71 for timing details regarding calibration.

When RX is activated, the chip will remain in receive mode until a packet is successfully received or the RX termination timer expires (see Section 13.12.3). Note: the probability that a false sync word is detected can be reduced by using PQT, CS, maximum sync word length, and sync word qualifier mode as describe in Section 13.10.1. After a packet is successfully received the radio controller will then go to the state indicated by the MCSM1.RXOFF_MODE setting. The possible destinations are:

- IDLE
- FSTXON: Frequency synthesizer on and ready at the TX frequency. Activate TX with STX.
- TX: Start sending preambles
- RX: Start search for a new packet

Note: When MCSM1.RXOFF_MODE=11 and a packet has been received, it will take some time before a valid RSSI value is present in the RSSI register again even if the radio has never exited RX mode. This time is the same as the RSSI response time discussed in DN505 [16].

Similarly, when TX is active the chip will remain in the TX state until the current packet has been successfully transmitted. Then the state will change as indicated by the MCSM1.TXOFF_MODE setting. The possible destinations are the same as for RX.

It is possible to change the state from RX to TX and vice versa by using the command strobes. If the radio controller is currently in transmit and an SRX strobe is written to the RFST register, the current transmission will be ended and the transition to RX will be done.

If the radio controller is in RX when the STX or SFSTXON command strobes are used and MCSM1.CCA_MODE≠00, the TX-if-CCA function will be used. Note that for TX-if-CCA function the register TEST1 on Page 225 TEST1 should be set to 0x31. If the channel is not clear, the chip will remain in RX. For more details on clear channel assessment see Section 13.10.7 on Page 200 for details.

The SIDLE command strobe can always be used to force the radio controller to go to the IDLE state.

13.12.2 Timing

The radio controller controls most timing in CC1110Fx/CC1111Fx, such as synthesizer calibration, PLL lock time, and RX/TX turnaround times. Table 71 shows the timing for key state transitions when the system clock frequency f_{Sys} is equal to f_{Ref} and the data rate is 250 kBaud. No PA ramping/shaping is implemented. See DN110 [15] for more details on how the state transition times changes under other conditions.

Power on time and XOSC start-up times are variable, but within the limits stated in Table 11 and Table 12

Note that in a frequency hopping spread spectrum or a multi-channel protocol it is possible to reduce the calibration time significantly. This is explained in Section 13.18.2.

Description	Transmission Time as a function of f_{Ref} and/or f_{Symbol}[22]	Transition Time [µs]	
		f_{Ref} = 26 MHz	f_{Ref} = 24 MHz
Idle to RX, no calibration	$1953/f_{Sys}$	75.1	81.4
Idle to RX, with calibration[23]	$20768/f_{Sys}$	799	865
Idle to TX/FSTXON, no calibration	$1954/f_{Sys}$	75.2	81.4
Idle to TX/FSTXON, with calibration[23]	$20768/f_{Sys}$	799	865
TX to RX switch	$782/f_{Sys} + 0.25/f_{Symbol}$	31.1	33.6
RX to TX switch	$782/f_{Sys}$	30.1	32.6
TX to IDLE, no calibration	$\sim 0.25/f_{Symbol}$	~1	~1
TX to IDLE, with calibration[23]	$\sim 0.25/f_{Symbol} + 18815/f_{Sys}$	725	785
RX to IDLE, no calibration	$2/f_{Sys}$	0.1	0.1
RX to IDLE, with calibration[23]	$18817/f_{Sys}$	724	784
Manual calibration	$19098/f_{Sys}$	735	796

Table 71: State Transition Timing

13.12.3 RX Termination Timer

CC1110Fx/CC1111Fx has optional functions for automatic termination of RX after a programmable time. The termination timer starts when in RX state. The timeout is programmable with the `MCSM2.RX_TIME` setting. When the timer expires, the radio controller will check the condition for staying in RX; if the condition is not met, RX will terminate.

The programmable conditions are:

- `MCSM2.RX_TIME_QUAL=0`: Continue receive if sync word has been found
- `MCSM2.RX_TIME_QUAL=1`: Continue receive if sync word has been found or preamble quality is above threshold (PQT)

If the system can expect the transmission to have started when enabling the receiver, the `MCSM2.RX_TIME_RSSI` function can be used. The radio controller will then terminate RX if the first valid carrier sense sample indicates no carrier (RSSI below threshold). See Section 13.10.4 on Page 198 for details on Carrier Sense.

For ASK/OOK modulation, lack of carrier sense is only considered valid after eight symbol periods. Thus, the `MCSM2.RX_TIME_RSSI` function can be used in ASK/OOK mode when the distance between "1" symbols is 8 or less.

If RX terminates due to no carrier sense when the `MCSM2.RX_TIME_RSSI` function is used, or if no sync word was found when using the `MCSM2.RX_TIME` timeout function, the chip will always go back to IDLE.

13.13 Frequency Programming

The frequency programming in ***CC1110Fx/CC1111Fx*** is designed to minimize the programming needed in a channel-oriented system.

To set up a system with channel numbers, the desired channel spacing is programmed with the `MDMCFG0.CHANSPC_M` and `MDMCFG1.CHANSPC_E` registers. The channel spacing registers are mantissa and exponent respectively.

The base or start frequency is set by the 24 bit frequency word located in the `FREQ2`, `FREQ1` and `FREQ0` registers. This word will typically be

[22] f_{Symbol} is the symbol rate for the data transmission (in this case 250 kBaud). Please see DN110 [15] for more details

[23] This is the calibration time given that `TEST0=0x0B` and `FSCAL3.CHP_CURR_CAL_EN=10` (max calibration time). Please see DN110 [15] for more details

set to the centre of the lowest channel frequency that is to be used.

The desired channel number is programmed with the 8-bit channel number register, CHANNR.CHAN, which is multiplied by the channel offset. The resultant carrier frequency is given by:

$$f_{carrier} = \frac{f_{ref}}{2^{16}} \cdot \left(FREQ + CHAN \cdot \left((256 + CHANSPC_M) \cdot 2^{CHANSPC_E-2}\right)\right)$$

With a reference frequency, f_{Ref}, equal to 26 MHz, the maximum channel spacing is 405 kHz. To get e.g. 1 MHz channel spacing one solution is to use 333 kHz channel spacing and select each third channel in CHANNR.CHAN.

The preferred IF frequency is programmed with the FSCTRL1.FREQ_IF register. The IF frequency is given by:

$$f_{IF} = \frac{f_{ref}}{2^{10}} \cdot FREQ_IF$$

Note that the SmartRF® Studio software [9] automatically calculates the optimum register setting based on channel spacing and channel filter bandwidth.

If any frequency programming register is altered when the frequency synthesizer is running, the synthesizer may give an undesired response. Hence, the frequency programming should only be updated when the radio is in the IDLE state.

13.14 VCO

The VCO is completely integrated on-chip.

13.14.1 VCO and PLL Self-Calibration

The VCO characteristics will vary with temperature and supply voltage changes, as well as the desired operating frequency. In order to ensure reliable operation, ***CC1110Fx/CC1111Fx*** includes frequency synthesizer self-calibration circuitry. This calibration should be done regularly, and must be performed after turning on power and before using a new frequency (or channel). The number of f_{Ref} periods for completing the PLL calibration is given in Table 71 on Page 204.

The calibration can be initiated automatically or manually. The synthesizer can be automatically calibrated each time the synthesizer is turned on, or each time the synthesizer is turned off automatically. This is configured with the MCSM0.FS_AUTOCAL register setting. In manual mode, the calibration is initiated when the SCAL command strobe is activated in the IDLE mode.

Note that the calibration values are maintained in power-down modes PM1/2/3, so the calibration is still valid after waking up from these power-down modes (unless supply voltage or temperature has changed significantly).

13.15 Output Power Programming

The RF output power level from the device has two levels of programmability, as illustrated in Figure 56. Firstly, the PA_TABLE7 - PA_TABLE0 registers can hold up to eight user selected output power settings. Secondly, the 3-bit FREND0.PA_POWER value selects the PA_TABLE7 - PA_TABLE0 register to use. This two-level functionality provides flexible PA power ramp up and ramp down at the start and end of transmission, as well as ASK modulation shaping. All the PA power settings in the PA_TABLE7 - PA_TABLE0 registers, from index 0 up to the index set by FREND0.PA_POWER, values are used.

The power ramping at the start and at the end of a packet can be turned off by setting FREND0.PA_POWER to zero and then program the desired output power to PA_TABLE0 register.

If OOK modulation is used, the logic 0 and logic 1 power levels shall be programmed to index 0 and 1 respectively, i.e. PA_TABLE0 and PA_TABLE1.

Table 72 contains recommended PA_TABLE settings for various output levels and frequency bands. Using PA settings from 0x68 to 0x6F is not recommended.

	315 MHz		433 MHz		868 MHz		915 MHz	
Output Power [dBm]	**Setting**	**Current Consumption, Typ. [mA]**	**Setting**	**Current Consumption, Typ. [mA]**	**Setting**	**Current Consumption, Typ. [mA]**	**Setting**	**Current Consumption, Typ. [mA]**
–30	0x12	14	0x12	15	0x03	16	0x03	16
–20	0x0D	15	0x0E	16	0x0E	17	0x0D	16
–15	0x1C	16	0x1D	16	0x1E	17	0x1D	17
–10	0x34	17	0x34	18	0x27	19	0x26	18
–5	0x2B	19	0x2C	20	0x8F	19	0x57	18
0	0x51	19	0x60	20	0x50	21	0x8E	21
5	0x85	22	0x84	23	0x84	25	0x83	25
7	0xCB	25	0xC8	28	0xCB	31	0xC7	31
10	0xC2	31	0xC0	33	0xC2	36	0xC0	36

Table 72: Optimum `PA_TABLE` Settings for Various Output Power Levels and Frequency Bands

13.16 Shaping and PA Ramping

With ASK modulation, up to eight power settings are used for shaping. The modulator contains a counter that counts up when transmitting a one and down when transmitting a zero. The counter counts at a rate equal to 8 times the symbol rate. The counter saturates at `FREND0.PA_POWER` and 0 respectively. This counter value can be viewed as an index for a lookup table in the power table (see Figure 56). Thus, in order to utilize the whole table, `FREND0.PA_POWER` should be 7 when ASK is active. The shaping of the ASK signal is dependent on the configuration of `PA_TABLE7` - `PA_TABLE0` registers. Figure 57 shows some examples of ASK shaping.

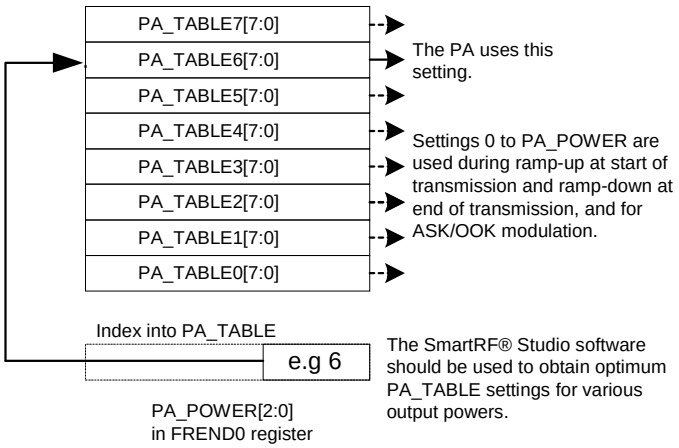

Figure 56: `PA_POWER` and `PA_TABLE`

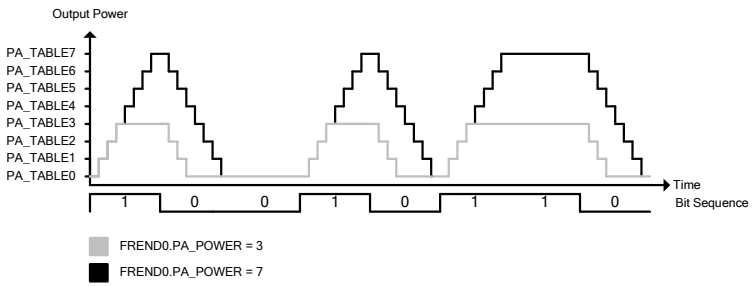

Figure 57: Shaping of ASK Signal

13.17 Selectivity

Figure 58 to Figure 60 show the typical selectivity performance (adjacent and alternate rejection).

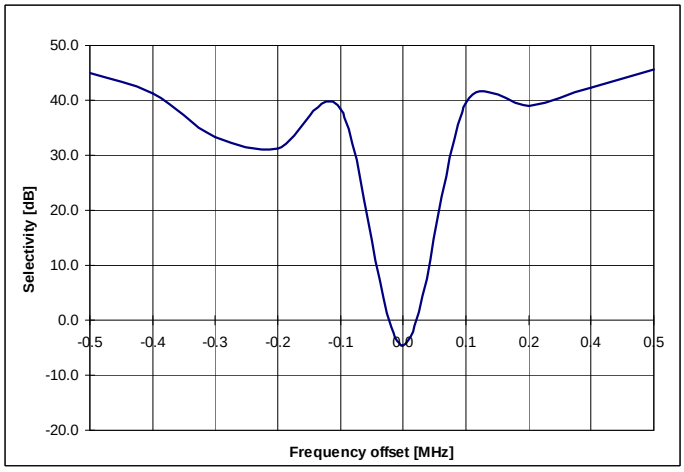

Figure 58: Typical Selectivity at 1.2 kBaud @ 868 MHz. IF Frequency is 152 kHz. `MDMCFG2.DEM_DCFILT_OFF=0`

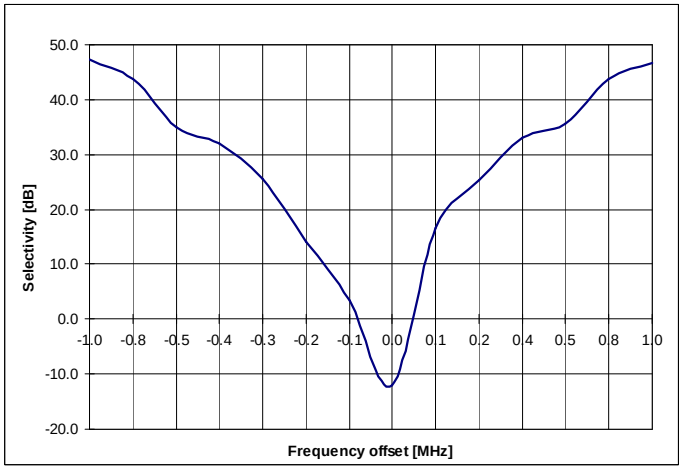

Figure 59: Typical Selectivity at 38.4 kBaud@ 868 MHz. IF Frequency is 152 kHz. `MDMCFG2.DEM_DCFILT_OFF=0`

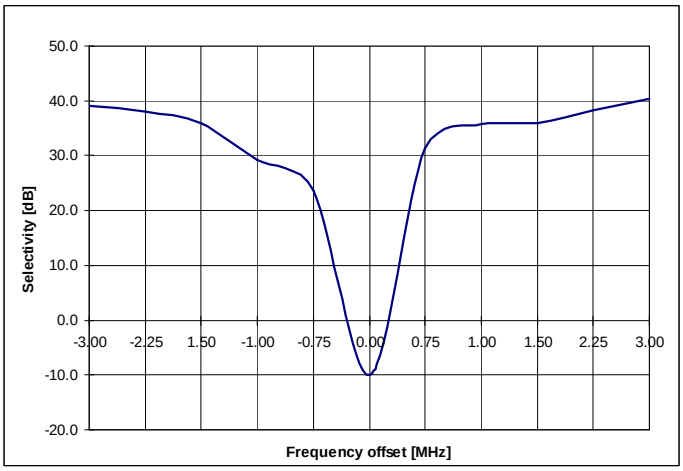

Figure 60: Typical Selectivity at 250 kBaud @ 868 MHz. IF Frequency is 304 kHz. `MDMCFG2.DEM_DCFILT_OFF=0`

13.18 System Considerations and Guidelines

13.18.1 SRD/ISM Regulations

International regulations and national laws regulate the use of radio receivers and transmitters. Short Range Devices (SRDs) for license free operation below 1 GHz are usually operated in the 315 MHz, 433 MHz, 868 MHz or 915 MHz frequency bands. The ***CC1110Fx/CC1111Fx*** is specifically designed for such use with its 300 - 348 MHz, 391 - 464 MHz, and 782 - 928 MHz operating ranges. The most important regulations when using the ***CC1110Fx/CC1111Fx*** in the 433 MHz, 868 MHz, or 915 MHz frequency bands are EN 300 220 (Europe) and FCC CFR47 part 15 (USA). A summary of the most important aspects of these regulations can be found in [10] or [11].

Please note that compliance with regulations is dependent on complete system performance. It is the customer's responsibility to ensure that the system complies with regulations.

13.18.2 Frequency Hopping and Multi-Channel Systems

The 433 MHz, 868 MHz, or 915 MHz are shared by many systems both in industrial, office and home environments. It is therefore recommended to use frequency hopping spread spectrum (FHSS) or a multi-channel protocol because the frequency diversity makes the system more robust with respect to interference from other systems operating in the same frequency band. FHSS also combats multipath fading.

Charge pump current, VCO current and VCO capacitance array calibration data is required for each frequency when implementing frequency hopping for ***CC1110Fx/CC1111Fx***. There are 3 ways of obtaining the calibration data from the chip:

1) Frequency hopping with calibration for each hop. The PLL calibration time is approximately 735 µs[24] and the blanking interval between each frequency hop is then approximately 799 µs[24] when f_{Ref} is 26 MHz. When f_{Ref} is 24 MHz, these numbers are 796 µs[24] and 865 µs[24] respectively.

2) Fast frequency hopping without calibration for each hop can be done by calibrating each frequency at startup and saving the resulting `FSCAL3`, `FSCAL2` and `FSCAL1` register values in memory. Between each frequency hop, the calibration process can then be replaced by writing the `FSCAL3`, `FSCAL2` and `FSCAL1` register values corresponding to the next RF frequency. The PLL turn on time is approximately 75 µs[24] when f_{Ref} is 26 MHz and 81 µs[24] when f_{Ref} is 24 MHz. The blanking interval between each frequency hop is then approximately equal to the PLL turn on time. The VCO current calibration result is available in `FSCAL2` and is not dependent on the RF frequency. Neither is the charge pump current calibration result available in `FSCAL3`. The same value can therefore be used for all frequencies.

---

[24] The system clock frequency is equal to f_{Ref} and no PA ramping/shaping is implemented. Max calibration time is used (`TEST0=0x0B` and `FSCAL3.CHP_CURR_CAL_EN=10`) Please see DN110 [15] for more details.

3) Run calibration on a single frequency at startup. Next write 0 to FSCAL3[5:4] to disable the charge pump calibration. After writing to FSCAL3[5:4] strobe SRX (or STX) with MCSM0.FS_AUTOCAL=01 for each new frequency hop. That is, VCO current and VCO capacitance calibration is done but not charge pump current calibration. When charge pump current calibration is disabled the calibration time is reduced from 735 µs[24] to 168 µs[25] when f_{Ref} is 26 MHz and from 799 µs[24] to 182 µs[25] when f_{Ref} is 24 MHz. The blanking interval between each frequency hop is then 243 µs and 263 µs respectively.

There is a trade off between blanking time and memory space needed for storing calibration data in non-volatile memory. Solution 2) above gives the shortest blanking interval, but requires more memory space to store calibration values. Solution 3) gives 631 µs smaller blanking interval than solution 1 when f_{Ref} is 26 MHz and 683 µs smaller blanking interval than solution 1 when f_{Ref} is 24 MHz).

13.18.3 Wideband Modulation not Using Spread Spectrum

Digital modulation systems under FCC part 15.247 includes 2-FSK and GFSK modulation. A maximum peak output power of 1 W (30 dBm) is allowed if the 6 dB bandwidth of the modulated signal exceeds 500 kHz. In addition, the peak power spectral density conducted to the antenna shall not be greater than 8 dBm in any 3 kHz band. Pleas refer to DN006 [12] for further details concerning wideband modulation and **CC1110Fx/CC1111Fx**.

Operating with high frequency separation, the **CC1110Fx/CC1111Fx** is suited for systems targeting compliance with digital modulation systems as defined by FCC part 15.247. An external power amplifier is needed to increase the output above 10 dBm.

13.18.4 Data Burst Transmissions

The high maximum data rate of **CC1110Fx/CC1111Fx** opens up for burst transmissions. A low average data rate link (e.g. 10 kBaud), can be realized using a higher over-the-air data rate. Buffering the data and transmitting in bursts at high data rate (e.g. 500 kBaud) will reduce the time in active mode, and hence also reduce the average current consumption significantly. Reducing the time in active mode will reduce the likelihood of collisions with other systems in the same frequency range. Note that sensitivity and thus transmission range is reduced in high data rate bursts compared to lower data rates.

13.18.5 Crystal Drift Compensation

The **CC1110Fx/CC1111Fx** has a very fine frequency resolution (see Table 16). This feature can be used to compensate for frequency offset and drift.

The frequency offset between an 'external' transmitter and the receiver is measured in the **CC1110Fx/CC1111Fx** and can be read back from the FREQEST status register as described in Section 13.7.1. The measured frequency offset can be used to calibrate the frequency using the 'external' transmitter as the reference. That is, the received signal of the device will match the receiver's channel filter better. In the same way the centre frequency of the transmitted signal will match the 'external' transmitter's signal.

13.18.6 Spectrum Efficient Modulation

CC1110Fx/CC1111Fx also has the possibility to use Gaussian shaped 2-FSK (GFSK). This spectrum-shaping feature improves adjacent channel power (ACP) and occupied bandwidth. In 'true' 2-FSK systems with abrupt frequency shifting, the spectrum is inherently broad. By making the frequency shift 'softer', the spectrum can be made significantly narrower. Thus, higher data rates can be transmitted in the same bandwidth using GFSK.

13.18.7 Low Cost Systems

A HC-49 type SMD crystal is used in the CC1110EM reference design [1]. Note that the crystal package strongly influences the price. In a size constrained PCB design a smaller, but more expensive, crystal may be used.

13.18.8 Battery Operated Systems

In low power applications, PM2 or PM3 should be used when the **CC1110Fx/CC1111Fx** is not active. The Sleep Timer can be used in PM2.

---

[25] TEST0=0x0B. Please see DN110 [15] for more details.

13.18.9 Increasing Output Power

In some applications it may be necessary to extend the link range. Adding an external power amplifier is the most effective way of doing this.

The power amplifier should be inserted between the antenna and the balun, and two T/R switches are needed to disconnect the PA in RX mode. See Figure 61.

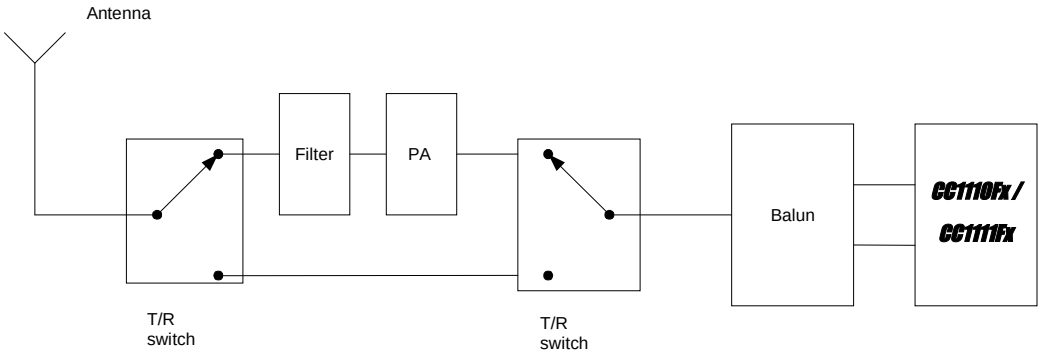

Figure 61: Block Diagram of CC1110Fx/CC1111Fx Usage with External Power Amplifier

13.19 Radio Registers

This section describes all RF registers used for control and status for the radio.

0xDF2F: IOCFG2 - Radio Test Signal Configuration (P1_7)

Bit	Field Name	Reset	R/W	Description
7		-	R0	Not used
6	GDO2_INV	0	R/W	Invert output, i.e. select active low (1) / high (0)
5:0	GDO2_CFG[5:0]	000000	R/W	Debug output on P1_7 pin. See Table 73 for a description of internal signals which can be output on this pin for debug purpose

0xDF30: IOCFG1 - Radio Test Signal Configuration (P1_6)

Bit	Field Name	Reset	R/W	Description	
7	GDO_DS	0	R/W	Drive strength control for I/O pins in output mode. Selects output drive capability to account for low I/O supply voltage VDD on pin DVDD	
				0	Minimum drive capability. VDD equal or greater than 2.6 V
				1	Maximum drive capability. VDD less than 2.6 V
6	GDO1_INV	0	R/W	Invert output	
				0	Active high
				1	Active low
5:0	GDO1_CFG[5:0]	000000	R/W	Debug output on P1_6 pin. See Table 73 for a description of internal signals which can be output on this pin for debug purpose	

0xDF31: IOCFG0 - Radio Test Signal Configuration (P1_5)

Bit	Field Name	Reset	R/W	Description
7		-	R0	Not used
6	GDO0_INV	0	R/W	Invert output, i.e. select active low (1) / high (0)
5:0	GDO0_CFG[5:0]	000000	R/W	Debug output on P1_5 pin. See Table 73 for a description of internal signals which can be output on this pin for debug purpose.

0xDF00: SYNC1 - Sync Word, High Byte

Bit	Field Name	Reset	R/W	Description
7:0	SYNC[15:8]	0xD3	R/W	8 MSB of 16-bit sync word

0xDF01: SYNC0 - Sync Word, Low Byte

Bit	Field Name	Reset	R/W	Description
7:0	SYNC[7:0]	0x91	R/W	8 LSB of 16-bit sync word

0xDF02: PKTLEN - Packet Length

Bit	Field Name	Reset	R/W	Description
7:0	PACKET_LENGTH	0xFF	R/W	Indicates the packet length when fixed length packets are enabled. If variable length packets are used, this value indicates the maximum length packets allowed

0xDF03: PKTCTRL1 - Packet Automation Control

Bit	Field Name	Reset	R/W	Description
7:5	PQT[2:0]	000	R/W	Preamble quality estimator threshold. The preamble quality estimator increases an internal counter by one each time a bit is received that is different from the previous bit, and decreases the counter by 8 each time a bit is received that is the same as the last bit. A threshold of 4·`PQT` for this counter is used to gate sync word detection. When `PQT=0` a sync word is always accepted
4:3		-	R0	Not used
2	APPEND_STATUS	1	R/W	When enabled, two status bytes will be appended to the payload of the packet. The status bytes contain RSSI and LQI values, as well as the CRC OK flag
1:0	ADR_CHK[1:0]	00	R/W	Controls address check configuration of received packages. 00 No address check 01 Address check, no broadcast 10 Address check, 0 (0x00) broadcast 11 Address check, 0 (0x00) and 255 (0xFF) broadcast

0xDF04: PKTCTRL0 - Packet Automation Control

Bit	Field Name	Reset	R/W	Description
7		-	R0	Not used
6	WHITE_DATA	1	R/W	Whitening enable. Data whitening can only be used when `PKTCTRL0.CC2400_EN=0` (default). 0 Disabled 1 Enabled
5:4	PKT_FORMAT[1:0]	00	R/W	Packet format of RX and TX data 00 Normal mode 01 Reserved 10 Random TX mode; sends random data using PN9 generator. Used for test. Works as normal mode, setting 00, in RX. 11 Reserved
3		0	R/W	Reserved. Always write 0
2	CRC_EN	1	R/W	CRC calculation in TX and CRC check in RX enable 0 Disable 1 Enable
1:0	LENGTH_CONFIG[1:0]	01	R/W	Packet Length Configuration 00 Fixed packet length mode. Length configured in `PKTLEN` register 01 Variable packet length mode. Packet length configured by the first byte after sync word 10 Reserved 11 Reserved

0xDF05: ADDR - Device Address

Bit	Field Name	Reset	R/W	Description
7:0	DEVICE_ADDR[7:0]	0x00	R/W	Address used for packet filtration. Optional broadcast addresses are 0 (0x00) and 255 (0xFF).

0xDF06: CHANNR - Channel Number

Bit	Field Name	Reset	R/W	Description
7:0	CHAN[7:0]	0x00	R/W	The 8-bit unsigned channel number, which is multiplied by the channel spacing setting and added to the base frequency.

0xDF07: FSCTRL1 - Frequency Synthesizer Control

Bit	Field Name	Reset	R/W	Description
7:6		-	R0	Not used
5		0	R/W	Reserved
4:0	FREQ_IF[4:0]	01111	R/W	The desired IF frequency to employ in RX. Subtracted from FS base frequency in RX and controls the digital complex mixer in the demodulator. $f_{IF} = \frac{f_{ref}}{2^{10}} \cdot FREQ_IF$ The default value gives an IF frequency of 381 kHz when f_{Ref} = 26 MHz and 352 kHz when f_{Ref} = 24 MHz.

0xDF08: FSCTRL0 - Frequency Synthesizer Control

Bit	Field Name	Reset	R/W	Description
7:0	FREQOFF[7:0]	0x00	R/W	Frequency offset added to the base frequency before being used by the FS. (2's complement). Resolution is $f_{Ref}/2^{14}$ Range is ±202 kHz to ±209 kHz for CC1110Fx and ±186 kHz for CC1111Fx

0xDF09: FREQ2 - Frequency Control Word, High Byte

Bit	Field Name	Reset	R/W	Description
7:6	FREQ[23:22]	01	R	FREQ[23:22]
5:0	FREQ[21:16]	011110	R/W	FREQ[23:0] is the base frequency for the frequency synthesizer in increments of $f_{Ref}/2^{16}$. $f_{carrier} = \frac{f_{ref}}{2^{16}} \cdot FREQ[23:0]$

0xDF0A: FREQ1 - Frequency Control Word, Middle Byte

Bit	Field Name	Reset	R/W	Description
7:0	FREQ[15:8]	11000100	R/W	Ref. FREQ2 register

0xDF0B: FREQ0 - Frequency Control Word, Low Byte

Bit	Field Name	Reset	R/W	Description
7:0	FREQ[7:0]	11101100	R/W	Ref. FREQ2 register

0xDF0C: MDMCFG4 - Modem configuration

Bit	Field Name	Reset	R/W	Description
7:6	CHANBW_E[1:0]	10	R/W	
5:4	CHANBW_M[1:0]	00	R/W	Sets the decimation ratio for the delta-sigma ADC input stream and thus the channel bandwidth. $BW_{channel} = \frac{f_{ref}}{8 \cdot (4 + CHANBW_M) \cdot 2^{CHANBW_E}}$ The default values give 203 kHz channel filter bandwidth when f_{Ref} = 26 MHz and 188 kHz when f_{Ref} = 24 MHz.
3:0	DRATE_E[3:0]	1100	R/W	The exponent of the user specified symbol rate.

0xDF0D: MDMCFG3 - Modem Configuration

Bit	Field Name	Reset	R/W	Description
7:0	DRATE_M[7:0]	0x22	R/W	The mantissa of the user specified symbol rate. The symbol rate is configured using an unsigned, floating-point number with 9-bit mantissa and 4-bit exponent. The 9th bit is a hidden '1'. The resulting data rate is: $R_{DATA} = \frac{(256 + DRATE_M) \cdot 2^{DRATE_E}}{2^{28}} \cdot f_{ref}$ The default values give a data rate of 115.051 kBaud when f_{Ref} = 26 MHz and 106.201 kHz when f_{Ref} = 24 MHz.

0xDF0E: MDMCFG2 - Modem Configuration

Bit	Field Name	Reset	R/W	Description		
7	DEM_DCFILT_OFF	0	R/W	Disable digital DC blocking filter before demodulator. The recommended IF frequency changes when the DC blocking is disabled. Please use SmartRF® Studio [9] to calculate correct register setting.		
				0	Enable	Better Sensitivity
				1	Disable	Current optimized. Only for data rates ≤ 100 kBaud
6:4	MOD_FORMAT[2:0]	000	R/W	The modulation format of the radio signal		
				000	2-FSK	
				001	GFSK	
				010	Reserved	
				011	ASK/OOK	
				100	Reserved	
				101	Reserved	
				110	Reserved	
				111	MSK	
				Note that MSK is only supported for data rates above 26 kBaud and GFSK, ASK , and OOK is only supported for data rate up until 250 kBaud. MSK cannot be used if Manchester encoding/decoding is enabled.		
3	MANCHESTER_EN	0	R/W	Manchester encoding/decoding enable		
				0	Disable	
				1	Enable	
				Note that Manchester encoding/decoding cannot be used at the same time as using the FEC/Interleaver option or when using MSK modulation.		
2:0	SYNC_MODE[2:0]	010	R/W	Sync-word qualifier mode. The values 000 and 100 disables preamble and sync word transmission in TX and preamble and sync word detection in RX. The values 001, 010, 101 and 110 enables 16-bit sync word transmission in TX and 16-bits sync word detection in RX. Only 15 of 16 bits need to match in RX when using setting 001 or 101. The values 011 and 111 enables repeated sync word transmission in TX and 32-bits sync word detection in RX (only 30 of 32 bits need to match).		
				000	No preamble/sync	
				001	15/16 sync word bits detected	
				010	16/16 sync word bits detected	
				011	30/32 sync word bits detected	
				100	No preamble/sync, carrier-sense above threshold	
				101	15/16 + carrier-sense above threshold	
				110	16/16 + carrier-sense above threshold	
				111	30/32 + carrier-sense above threshold	

0xDF0F: MDMCFG1 - Modem Configuration

Bit	Field Name	Reset	R/W	Description	
7	FEC_EN	0	R/W	Enable Forward Error Correction (FEC) with interleaving for packet payload. FEC is only supported for fixed packet length mode, i.e. `PKTCTRL0.LENGTH_CONFIG=0`	
				0	Disable
				1	Enable
6:4	NUM_PREAMBLE[2:0]	010	R/W	Sets the minimum number of preamble bytes to be transmitted	
				000	2
				001	3
				010	4
				011	6
				100	8
				101	12
				110	16
				111	24
3:2		-	R0	Not used	
1:0	CHANSPC_E[1:0]	10	R/W	2 bit exponent of channel spacing	

0xDF10: MDMCFG0 - Modem Configuration

Bit	Field Name	Reset	R/W	Description
7:0	CHANSPC_M[7:0]	0xF8	R/W	8-bit mantissa of channel spacing (initial 1 assumed). The channel spacing is multiplied by the channel number `CHAN` and added to the base frequency. It is unsigned and has the format: $\Delta f_{CHANNEL} = \frac{f_{ref}}{2^{18}} \cdot (256 + CHANSPC_M) \cdot 2^{CHANSPC_E}$ The default values give 199.951 kHz channel spacing when f_{Ref} = 26 MHz and 184.570 kHz when f_{Ref} = 24 MHz.

0xDF11: DEVIATN - Modem Deviation Setting

Bit	Field Name	Reset	R/W	Description	
7		-	R0	Not used	
6:4	DEVIATION_E[2:0]	100	R/W	Deviation exponent	
3		-	R0	Not used	
2:0	DEVIATION_M[2:0]	111	R/W	TX	
				2-FSK/ GFSK	Specifies the nominal frequency deviation from the carrier frequency for a ‘0’ (-DEVIATN) and a ‘1’ (+DEVIATN) in a mantissa-exponent format. The resulting deviation is given by: $f_{dev} = \frac{f_{ref}}{2^{17}} \cdot (8 + DEVIATION_M) \cdot 2^{DEVIATION_E}$ The default values give ±47.607 kHz deviation when f_{Ref} = 26 MHz and 43.945 kHz when f_{Ref} = 24 MHz.
				MSK	Specifies the fraction of a symbol period (1/8-8/8) during which a phase change occurs (‘0’: +90deg, ‘1’: -90deg). Refer to the SmartRF® Studio software [9] for correct `DEVIATN` setting when using MSK.
				ASK	This settings has no effect
				RX	
				2-FSK/ GFSK	Specifies the expected frequency deviation of incoming signal, must be approximately right for demodulation to be performed reliably and robustly
				MSK/ASK	This settings has no effect

0xDF12: MCSM2 - Main Radio Control State Machine Configuration

Bit	Field Name	Reset	R/W	Description
7:5		-	R0	Not used
4	RX_TIME_RSSI	0	R/W	Direct RX termination based on RSSI measurement (carrier sense). For ASK/OOK modulation, RX times out if there is no carrier sense in the first 8 symbol periods.
3	RX_TIME_QUAL	0	R/W	When the RX_TIME timer expires the chip stays in RX mode if sync word is found when `RX_TIME_QUAL=0`, or either sync word is found or PQT is reached when `RX_TIME_QUAL=1`.
2:0	RX_TIME[2:0]	111	R/W	Timeout for sync word search in RX. The timeout is relative to the programmed t_{Event0}.

The RX timeout in µs is given by `EVENT0`·C(`RX_TIME`, `WOR_RES`) ·26/X, where C is given by the table below and X is the reference frequency (f_{Ref}) in MHz:

`RX_TIME[2:0]`	`WOR_RES=0`	`WOR_RES=1`	`WOR_RES=2`	`WOR_RES=3`
000	3.6058	18.0288	32.4519	46.8750
001	1.8029	9.0144	16.2260	23.4375
010	0.9014	4.5072	8.1130	11.7188
011	0.4507	2.2536	4.0565	5.8594
100	0.2254	1.1268	2.0282	2.9297
101	0.1127	0.5634	1.0141	1.4648
110	0.0563	0.2817	0.5071	0.7324
111	Until end of packet			

As an example, `EVENT0` = 34666, `WOR_RES` = 0 and `RX_TIME` = 6 corresponds to 1.96 ms RX timeout

0xDF13: MCSM1 - Main Radio Control State Machine Configuration

Bit	Field Name	Reset	R/W	Description	
7:6		-	R0	Not used	
5:4	CCA_MODE[1:0]	11	R/W	Selects CCA_MODE; Reflected in CCA signal	
				00	Always
				01	If RSSI below threshold
				10	Unless currently receiving a packet
				11	If RSSI below threshold unless currently receiving a packet
3:2	RXOFF_MODE[1:0]	00	R/W	Select what should happen (next state) when a packet has been received	
				00	IDLE
				01	FSTXON
				10	TX
				11	Stay in RX
				It is not possible to set `RXOFF_MODE` to be TX or FSTXON and at the same time use CCA.	
1:0	TXOFF_MODE[1:0]	00	R/W	Select what should happen (next state) when a packet has been sent (TX)	
				00	IDLE
				01	FSTXON
				10	Stay in TX (start sending preamble)
				11	RX

0xDF14: MCSM0 - Main Radio Control State Machine Configuration

Bit	Field Name	Reset	R/W	Description	
7:6		-	R0	Not used	
5:4	FS_AUTOCAL[1:0]	00	R/W	Select calibration mode (when to calibrate)	
				00	Never (manually calibrate using SCAL strobe)
				01	When going from IDLE to RX or TX (or FSTXON)
				10	When going from RX or TX back to IDLE automatically
				11	Every 4th time when going from RX or TX to IDLE automatically
3		0	R/W	Reserved. Refer to SmartRF® Studio software [9] for settings.	
2		1	R/W	Reserved. Refer to SmartRF® Studio software [9] for settings.	
1:0	CLOSE_IN_RX[1:0]	00	R/W	Sets RX attenuation. Used in order to avoid saturation in RX when two or more chips are close (within ~3 m). RX attenuation, typical values:	
				00	0 dB
				01	6 dB
				10	12 dB
				11	18 dB

0xDF15: FOCCFG - Frequency Offset Compensation Configuration

Bit	Field Name	Reset	R/W	Description
7		-	R0	Not used
6		1	R/W	Reserved. Always write 0
5	FOC_BS_CS_GATE	1	R/W	If set, the demodulator freezes the frequency offset compensation and clock recovery feedback loops until the CARRIER_SENSE signal goes high.
4:3	FOC_PRE_K[1:0]	10	R/W	The frequency compensation loop gain to be used before a sync word is detected.
				00 *K*
				01 *2K*
				10 *3K*
				11 *4K*
2	FOC_POST_K	1	R/W	The frequency compensation loop gain to be used after a sync word is detected.
				0 Same as `FOC_PRE_K`
				1 *K/2*
1:0	FOC_LIMIT[1:0]	10	R/W	The saturation point for the frequency offset compensation algorithm:
				00 ±0 (no frequency offset compensation)
				01 $\pm BW_{CHAN} / 8$
				10 $\pm BW_{CHAN} / 4$
				11 $\pm BW_{CHAN} / 2$
				Frequency offset compensation is not supported for ASK/OOK; Always use `FOC_LIMIT=0` with these modulation formats.

0xDF16: BSCFG - Bit Synchronization Configuration

Bit	Field Name	Reset	R/W	Description	
7:6	BS_PRE_KI[1:0]	01	R/W	The clock recovery feedback loop integral gain to be used before a sync word is detected (used to correct offsets in data rate):	
				00	K_I
				01	$2K_I$
				10	$3K_I$
				11	$4K_I$
5:4	BS_PRE_KP[1:0]	10	R/W	The clock recovery feedback loop proportional gain to be used before a sync word is detected	
				00	K_P
				01	$2K_P$
				10	$3K_P$
				11	$4K_P$
3	BS_POST_KI	1	R/W	The clock recovery feedback loop integral gain to be used after a sync word is detected.	
				0	Same as `BS_PRE_KI`
				1	$K_I/2$
2	BS_POST_KP	1	R/W	The clock recovery feedback loop proportional gain to be used after a sync word is detected.	
				0	Same as `BS_PRE_KP`
				1	K_P
1:0	BS_LIMIT[1:0]	00	R/W	The saturation point for the data rate offset compensation algorithm:	
				00	±0 (No data rate offset compensation performed)
				01	±3.125% data rate offset
				10	±6.25% data rate offset
				11	±12.5% data rate offset

0xDF17: AGCCTRL2 - AGC Control

Bit	Field Name	Reset	R/W	Description	
7:6	MAX_DVGA_GAIN[1:0]	00	R/W	Reduces the maximum allowable DVGA gain.	
				00	All gain settings can be used
				01	The highest gain setting can not be used
				10	The 2 highest gain settings can not be used
				11	The 3 highest gain settings can not be used
5:3	MAX_LNA_GAIN[2:0]	000	R/W	Sets the maximum allowable LNA + LNA 2 gain relative to the maximum possible gain.	
				000	Maximum possible LNA + LNA 2 gain
				001	Approx. 2.6 dB below maximum possible gain
				010	Approx. 6.1 dB below maximum possible gain
				011	Approx. 7.4 dB below maximum possible gain
				100	Approx. 9.2 dB below maximum possible gain
				101	Approx. 11.5 dB below maximum possible gain
				110	Approx. 14.6 dB below maximum possible gain
				111	Approx. 17.1 dB below maximum possible gain
2:0	MAGN_TARGET[2:0]	011	R/W	These bits set the target value for the averaged amplitude from the digital channel filter (1 LSB = 0 dB).	
				000	24 dB
				001	27 dB
				010	30 dB
				011	33 dB
				100	36 dB
				101	38 dB
				110	40 dB
				111	42 dB

0xDF18: AGCCTRL1 - AGC Control

Bit	Field Name	Reset	R/W	Description	
7		-	R0	Not used	
6	AGC_LNA_PRIORITY	1	R/W	Selects between two different strategies for LNA and LNA2 gain adjustment. When 1, the LNA gain is decreased first. When 0, the LNA2 gain is decreased to minimum before decreasing LNA gain.	
5:4	CARRIER_SENSE_REL_THR[1:0]	00	R/W	Sets the relative change threshold for asserting carrier sense	
				00	Relative carrier sense threshold disabled
				01	6 dB increase in RSSI value
				10	10 dB increase in RSSI value
				11	14 dB increase in RSSI value
3:0	CARRIER_SENSE_ABS_THR[3:0]	0000	R/W	Sets the absolute RSSI threshold for asserting carrier sense (Equal to channel filter amplitude when AGC has not decreased gain). The 2-complement signed threshold is programmed in steps of 1 dB and is relative to the `MAGN_TARGET` setting.	
				1000 (–8)	Absolute carrier sense threshold disabled
				1001 (–7)	7 dB below `MAGN_TARGET` setting
				…	…
				1111 (–1)	1 dB below `MAGN_TARGET` setting
				0000 (0)	At `MAGN_TARGET` setting
				0001 (1)	1 dB above `MAGN_TARGET` setting
				…	…
				0111 (7)	7 dB above `MAGN_TARGET` setting

0xDF19: AGCCTRL0 - AGC Control

Bit	Field Name	Reset	R/W	Description	
7:6	HYST_LEVEL[1:0]	10	R/W	Sets the level of hysteresis on the magnitude deviation (internal AGC signal that determines gain changes).	
				00	No hysteresis, small symmetric dead zone, high gain
				01	Low hysteresis, small asymmetric dead zone, medium gain
				10	Medium hysteresis, medium asymmetric dead zone, medium gain
				11	Large hysteresis, large asymmetric dead zone, low gain
5:4	WAIT_TIME[1:0]	01	R/W	Sets the number of channel filter samples from a gain adjustment has been made until the AGC algorithm starts accumulating new samples.	
				00	8
				01	16
				10	24
				11	32
3:2	AGC_FREEZE[1:0]	00	R/W	Controls when the AGC gain should be frozen.	
				00	Normal operation. Always adjust gain when required.
				01	The gain setting is frozen when a sync word has been found.
				10	Manually freeze the analog gain setting and continue to adjust the digital gain.
				11	Manually freezes both the analog and the digital gain settings. Used for manually overriding the gain.
1:0	FILTER_LENGTH[1:0]	01	R/W	Sets the averaging length for the amplitude from the channel filter. Sets the OOK/ASK decision boundary for OOK/ASK reception. Please use the SmartRF® Studio software [9] for recommended settings.	
				00	8
				01	16
				10	32
				11	64

0xDF1A: FREND1 - Front End RX Configuration

Bit	Field Name	Reset	R/W	Description
7:6	LNA_CURRENT[1:0]	01	R/W	Adjusts front-end LNA PTAT current output
5:4	LNA2MIX_CURRENT[1:0]	01	R/W	Adjusts front-end PTAT outputs
3:2	LODIV_BUF_CURRENT_RX[1:0]	01	R/W	Adjusts current in RX LO buffer (LO input to mixer)
1:0	MIX_CURRENT[1:0]	10	R/W	Adjusts current in mixer

0xDF1B: FREND0 - Front End TX Configuration

Bit	Field Name	Reset	R/W	Description
7:6		-	R0	Not used
5:4	LODIV_BUF_CURRENT_TX[1:0]	01	R/W	Adjusts current TX LO buffer (input to PA). The value to use in this field is given by the SmartRF® Studio software [9].
3		-	R0	Not used
2:0	PA_POWER[2:0]	000	R/W	Selects PA power setting. This value is an index to the PATABLE (PA_TABLE7 - PA_TABLE0 registers), which can be programmed with up to 8 different PA settings. In ASK mode, this selects the PATABLE index to use when transmitting a '1'. PATABLE index zero is used in ASK when transmitting a '0'. The PATABLE settings from index '0' to the PA_POWER value are used for ASK TX shaping, and for power ramp-up/ramp-down at the start/end of transmission in all TX modulation formats.

0xDF1C: FSCAL3 - Frequency Synthesizer Calibration

Bit	Field Name	Reset	R/W	Description
7:6	FSCAL3[7:6]	10	R/W	Frequency synthesizer calibration configuration. The value to write in this register before calibration is given by the SmartRF® Studio software [9].
5:4	CHP_CURR_CAL_EN[1:0]	10	R/W	Disable charge pump calibration stage when 0
3:0	FSCAL3[3:0]	1001	R/W	Frequency synthesizer calibration result register. Digital bit vector defining the charge pump output current, on an exponential scale: $IOUT=I_0 \cdot 2^{FSCAL3[3:0]/4}$ Fast frequency hopping without calibration for each hop can be done by calibrating upfront for each frequency and saving the resulting FSCAL3, FSCAL2 and FSCAL1 register values. Between each frequency hop, calibration can be replaced by writing the FSCAL3, FSCAL2 and FSCAL1 register values corresponding to the next RF frequency.
Note: This register will be in its reset state when returning to active mode from PM2 and PM3.				

0xDF1D: FSCAL2 - Frequency Synthesizer Calibration

Bit	Field Name	Reset	R/W	Description
7:6		-	R0	Not used
5	VCO_CORE_H_EN	0	R/W	Select VCO 0 Low 1 High
4:0	FSCAL2[4:0]	01010	R/W	Frequency synthesizer calibration result register. VCO current calibration result and override value Fast frequency hopping without calibration for each hop can be done by calibrating upfront for each frequency and saving the resulting FSCAL3, FSCAL2 and FSCAL1 register values. Between each frequency hop, calibration can be replaced by writing the FSCAL3, FSCAL2 and FSCAL1 register values corresponding to the next RF frequency.
Note: This register will be in its reset state when returning to active mode from PM2 and PM3.				

0xDF1E: FSCAL1 - Frequency Synthesizer Calibration

Bit	Field Name	Reset	R/W	Description
7:6		-	R0	Not used
5:0	FSCAL1[5:0]	100000	R/W	Frequency synthesizer calibration result register. Capacitor array setting for VCO coarse tuning. Fast frequency hopping without calibration for each hop can be done by calibrating upfront for each frequency and saving the resulting `FSCAL3`, `FSCAL2` and `FSCAL1` register values. Between each frequency hop, calibration can be replaced by writing the `FSCAL3`, `FSCAL2` and `FSCAL1` register values corresponding to the next RF frequency.
Note: This register will be in its reset state when returning to active mode from PM2 and PM3.				

0xDF1F: FSCAL0 - Frequency Synthesizer Calibration

Bit	Field Name	Reset	R/W	Description
7		-	R0	Not used
6:0	FSCAL0[6:0]	0001101	R/W	Frequency synthesizer calibration control. The value to use in this register is given by the SmartRF® Studio software [9].

0xDF23: TEST2 - Various Test Settings

Bit	Field Name	Reset	R/W	Description
7:0	TEST2[7:0]	0x88	R/W	At low data rates, the sensitivity can be improved by changing it to 0x81 (`MDMCFG2.DEM_DCFILT_OFF` should be 0).

0xDF24: TEST1 - Various Test Settings

Bit	Field Name	Reset	R/W	Description
7:0	TEST1[7:0]	0x11	R/W	Always set this register to 0x31 when being in TX. At low data rates, the sensitivity can be improved by changing it to 0x35 in RX. (`MDMCFG2.DEM_DCFILT_OFF` should be 0).

0xDF25: TEST0 - Various Test Settings

Bit	Field Name	Reset	R/W	Description
7:2	TEST0[7:2]	000010	R/W	The value to use in this register is given by the SmartRF® Studio software [9].
1	VCO_SEL_CAL_EN	1	R/W	Enable VCO selection calibration stage when 1
0	TEST0[0]	1	R/W	The value to use in this register is given by the SmartRF® Studio software [9].

0xDF27: PA_TABLE7 - PA Power Setting 7

Bit	Field Name	Reset	R/W	Description
7:0	PA_TABLE7[7:0]	0x00	R/W	Power amplifier output power setting 7

0xDF28: PA_TABLE6 - PA Power Setting 6

Bit	Field Name	Reset	R/W	Description
7:0	PA_TABLE6[7:0]	0x00	R/W	Power amplifier output power setting 6

0xDF29: PA_TABLE5 - PA Power Setting 5

Bit	Field Name	Reset	R/W	Description
7:0	PA_TABLE5[7:0]	0x00	R/W	Power amplifier output power setting 5

0xDF2A: PA_TABLE4 - PA Power Setting 4

Bit	Field Name	Reset	R/W	Description
7:0	PA_TABLE4[7:0]	0x00	R/W	Power amplifier output power setting 4

0xDF2B: PA_TABLE3 - PA Power Setting 3

Bit	Field Name	Reset	R/W	Description
7:0	PA_TABLE3[7:0]	0x00	R/W	Power amplifier output power setting 3

0xDF2C: PA_TABLE2 - PA Power Setting 2

Bit	Field Name	Reset	R/W	Description
7:0	PA_TABLE2[7:0]	0x00	R/W	Power amplifier output power setting 2

0xDF2D: PA_TABLE1 - PA Power Setting 1

Bit	Field Name	Reset	R/W	Description
7:0	PA_TABLE1[7:0]	0x00	R/W	Power amplifier output power setting 1

0xDF2E: PA_TABLE0 - PA Power Setting 0

Bit	Field Name	Reset	R/W	Description
7:0	PA_TABLE0[7:0]	0x00	R/W	Power amplifier output power setting 0

0xDF36: PARTNUM - Chip ID[15:8]

Bit	Field Name	Reset	R/W	Description
7:0	PARTNUM[7:0]	0x01 CC1110Fx 0x11 CC1111Fx	R	Chip part number

0xDF37: VERSION - Chip ID[7:0]

Bit	Field Name	Reset	R/W	Description
7:0	VERSION[7:0]	0x03	R	Chip version number.

0xDF38: FREQEST - Frequency Offset Estimate from Demodulator

Bit	Field Name	Reset	R/W	Description
7:0	FREQOFF_EST	0x00	R	The estimated frequency offset (2's complement) of the carrier. Resolution is $f_{Ref}/2^{14}$ Range is ±202 kHz to ±209 kHz for CC1110Fx and ±186 kHz for CC1111Fx Frequency offset compensation is only supported for 2-FSK, GFSK, and MSK modulation. This register will read 0 when using ASK or OOK modulation.

0xDF39: LQI - Demodulator Estimate for Link Quality

Bit	Field Name	Reset	R/W	Description
7	CRC_OK	0	R	The last CRC comparison matched. Cleared when entering/restarting RX mode.
6:0	LQI_EST[6:0]	0000000	R	The Link Quality Indicator estimates how easily a received signal can be demodulated. Calculated over the 64 symbols following the sync word.

0xDF3A: RSSI - Received Signal Strength Indication

Bit	Field Name	Reset	R/W	Description
7:0	RSSI	0x80	R	Received signal strength indicator

0xDF3B: MARCSTATE - Main Radio Control State Machine State

Bit	Field Name	Reset	R/W	Description		
7:5		-	R0	Not used		
4:0	MARC_STATE[4:0]	0001	R	Main Radio Control FSM State		
				Value	State Name	State (Figure 55, Page202)
				00000	SLEEP	SLEEP
				00001	IDLE	IDLE
				00010	Not used	
				00011	VCOON_MC	MANCAL
				00100	REGON_MC	MANCAL
				00101	MANCAL	MANCAL
				00110	VCOON	FS_WAKEUP
				00111	REGON	FS_WAKEUP
				01000	STARTCAL	CALIBRATE
				01001	BWBOOST	SETTLING
				01010	FS_LOCK	SETTLING
				01011	IFADCON	SETTLING
				01100	ENDCAL	CALIBRATE
				01101	RX	RX
				01110	RX_END	RX
				01111	RX_RST	RX
				10000	TXRX_SWITCH	TXRX_SETTLING
				10001	RX_OVERFLOW	RX_OVERFLOW
				10010	FSTXON	FSTXON
				10011	TX	TX
				10100	TX_END	TX
				10101	RXTX_SWITCH	RXTX_SETTLING
				10110	TX_UNDERFLOW	TX_UNDERFLOW

0xDF3C: PKTSTATUS - Packet Status

Bit	Field Name	Reset	R/W	Description
7	CRC_OK	0	R	The last CRC comparison matched. Cleared when entering/restarting RX mode.
6	CS	0	R	Carrier sense
5	PQT_REACHED	0	R	Preamble Quality reached
4	CCA	0	R	Channel is clear
3	SFD	0	R	Asserted when sync word has been sent / received, and de-asserted at the end of the packet. In RX, this bit will de-assert when the optional address check fails or the radio enter RX_OVERFLOW state. In TX this bit will de-assert if the radio enters TX_UNDERFLOW state.
2:0		-	R0	Not used

0xDF3D: VCO_VC_DAC - Current Setting from PLL Calibration Module

Bit	Field Name	Reset	R/W	Description
7:0	VCO_VC_DAC[7:0]	0x94	R	Status register for test only.

14 Voltage Regulators

The CC1110Fx/CC1111Fx includes a low drop-out voltage regulator. This is used to provide a 1.8 V power supply to the CC1110Fx/CC1111Fx digital power supply. The voltage regulator should not be used to provide power to external circuits because of limited power sourcing capability and also due to noise considerations.

The voltage regulator input pin AVDD_DREG is to be connected to the unregulated 2.0 V to 3.6 V power supply. The output of the digital regulator is connected internally in the CC1110Fx/CC1111Fx to the digital power supply.

The voltage regulator requires an external decoupling capacitor connected to the DCOUPL pin as described in Section 9 on Page 36.

14.1 Voltage Regulator Power-on

The voltage regulator is disabled when the CC1110Fx/CC1111Fx is placed in power modes PM2 or PM3 (see Section 12.1). When the voltage regulator is disabled, register and RAM contents will be retained while the unregulated 2.0 V - 3.6 V power supply is present.

15 Radio Test Output Signals

For debug and test purposes, a number of internal status signals in the radio may be output on the port pins P1_7 - P1_5. This debug option is controlled through the RF registers IOCFG2 - IOCFG0. Table 73 shows the value written to IOCFGx.GDOx_CFG[5:0] with the corresponding internal signals that will be output in each case.

Setting IOCFGx.GDOx_CFG to a value other than 0 will override the P1SEL_SELP1_7, P1SEL_SELP1_6, and P1SEL_SELP1_5 settings, and the pins will automatically become outputs.

GDO0_CFG[5:0] GDO1_CFG[5:0] GDO2_CFG[5:0]	Description
000000	The pin is configured according to the I/O registers. See 12.4.7
000001 - 000111	Reserved
001000	Preamble Quality Reached. Asserts when the PQI is above the programmed PQT value.
001001	Clear channel assessment. High when RSSI level is below threshold (dependent on the current CCA_MODE setting)
001010 - 001101	Reserved
001110	Carrier sense. High if RSSI level is above threshold.
001111	CRC_OK. The last CRC comparison matched. Cleared when entering/restarting RX mode.
010000 - 010101	Reserved
010110	RX_HARD_DATA[1]. Can be used together with RX_SYMBOL_TICK for alternative serial RX output.
010111	RX_HARD_DATA[0]. Can be used together with RX_SYMBOL_TICK for alternative serial RX output.
011000 - 011010	Reserved
011011	PA_PD. Can be used to control an external PA or RX/TX switch. Signal is asserted when the radio enters TX state and de-asserted when the radio exits TX state. The signal is active low
011100	LNA_PD. Can be used to control an external LNA or RX/TX switch. Signal is asserted when the radio enters RX state and de-asserted when the radio exits RX state. The signal is active low
011101	RX_SYMBOL_TICK. Can be used together with RX_HARD_DATA for alternative serial RX output.
011110 - 101110	Reserved
101111	HW to 0 (HW1 achieved by setting GDOx_INV=1). Can be used to control an external LNA/PA or RX/TX switch.
110000 - 111111	Reserved

Table 73: Radio Test Output Signals

16 Register Overview

MPAGE (0x93) - Memory Page Select 53
MEMCTR (0xC7) - Memory Arbiter Control 54
DPH0 (0x83) - Data Pointer 0 High Byte 54
DPL0 (0x82) - Data Pointer 0 Low Byte 54
DPH1 (0x85) - Data Pointer 1 High Byte 54
DPL1 (0x84) - Data Pointer 1 Low Byte 54
DPS (0x92) - Data Pointer Select 55
PSW (0xD0) - Program Status Word 55
ACC (0xE0) - Accumulator 56
B (0xF0) - B Register 56
SP (0x81) - Stack Pointer 56
IEN1 (0xB8) - Interrupt Enable 1 Register 63
IEN2 (0x9A) - Interrupt Enable 2 Register 64
TCON (0x88) - CPU Interrupt Flag 1 65
S0CON (0x98) - CPU Interrupt Flag 2 66
S1CON (0x9B) - CPU Interrupt Flag 3 66
IRCON (0xC0) - CPU Interrupt Flag 4 67
IRCON2 (0xE8) - CPU Interrupt Flag 5 68
IP1 (0xB9) - Interrupt Priority 1 68
IP0 (0xA9) - Interrupt Priority 0 69
PCON (0x87) - Power Mode Control 78
SLEEP (0xBE) - Sleep Mode Control 79
CLKCON (0xC6) - Clock Control 82
FCTL (0xAE) - Flash Control 89
FWDATA (0xAF) - Flash Write Data 89
FADDRH (0xAD) - Flash Address High Byte 89
FADDRL (0xAC) - Flash Address Low Byte 89
FWT (0xAB) - Flash Write Timing 89
P0 (0x80) - Port 0 95
P1 (0x90) - Port 1 95
P2 (0xA0) - Port 2 95
PERCFG (0xF1) - Peripheral Control 95
ADCCFG (0xF2) - ADC Input Configuration 96
P0SEL (0xF3) - Port 0 Function Select 96
P1SEL (0xF4) - Port 1 Function Select 96
P2SEL (0xF5) - Port 2 Function Select 97
P0DIR (0xFD) - Port 0 Direction 97
P1DIR (0xFE) - Port 1 Direction 97
P2DIR (0xFF) - Port 2 Direction 98
P0INP (0x8F) - Port 0 Input Mode 98
P1INP (0xF6) - Port 1 Input Mode 98
P2INP (0xF7) - Port 2 Input Mode 98
P0IFG (0x89) - Port 0 Interrupt Status Flag 99
P1IFG (0x8A) - Port 1 Interrupt Status Flag 99
P2IFG (0x8B) - Port 2 Interrupt Status Flag 99
PICTL (0x8C) - Port Interrupt Control 100
P1IEN (0x8D) - Port 1 Interrupt Mask 100
DMAARM (0xD6) - DMA Channel Arm 109
DMAREQ (0xD7) - DMA Channel Start Request and Status 110
DMA0CFGH (0xD5) - DMA Channel 0 Configuration Address High Byte 110
DMA0CFGL (0xD4) - DMA Channel 0 Configuration Address Low Byte 110
DMA1CFGH (0xD3) - DMA Channel 1 - 4 Configuration Address High Byte 110
DMA1CFGL (0xD2) - DMA Channel 1 - 4 Configuration Address Low Byte 110

DMAIRQ (0xD1) - DMA Interrupt Flag 111
ENDIAN (0x95) - USB Endianess Control (CC1111Fx) 111
T1CNTH (0xE3) - Timer 1 Counter High 120
T1CNTL (0xE2) - Timer 1 Counter Low 120
T1CTL (0xE4) - Timer 1 Control and Status 120
T1CCTL0 (0xE5) - Timer 1 Channel 0 Capture/Compare Control 121
T1CC0H (0xDB) - Timer 1 Channel 0 Capture/Compare Value High 121
T1CC0L (0xDA) - Timer 1 Channel 0 Capture/Compare Value Low 121
T1CCTL1 (0xE6) - Timer 1 Channel 1 Capture/Compare Control 122
T1CC1H (0xDD) - Timer 1 Channel 1 Capture/Compare Value High 122
T1CC1L (0xDC) - Timer 1 Channel 1 Capture/Compare Value Low 122
T1CCTL2 (0xE7) - Timer 1 Channel 2 Capture/Compare Control 123
T1CC2H (0xDF) - Timer 1 Channel 2 Capture/Compare Value High 123
T1CC2L (0xDE) - Timer 1 Channel 2 Capture/Compare Value Low 123
T2CTL (0x9E) - Timer 2 Control 125
T2CT (0x9C) - Timer 2 Count 125
T2PR (0x9D) - Timer 2 Prescaler 125
WORTIME0 (0xA5) - Sleep Timer Low Byte 127
WORTIME1 (0xA6) - Sleep Timer High Byte 128
WOREVT1 (0xA4) - Sleep Timer Event0 Timeout High 128
WOREVT0 (0xA3) - Sleep Timer Event0 Timeout Low 128
WORCTRL (0xA2) - Sleep Timer Control 128
WORIRQ (0xA1) - Sleep Timer Interrupt Control 128
T3CNT (0xCA) - Timer 3 Counter 132
T3CTL (0xCB) - Timer 3 Control 133
T3CCTL0 (0xCC) - Timer 3 Channel 0 Compare Control 134
T3CC0(0xCD) - Timer 3 Channel 0 Compare Value 134
T3CCTL1 (0xCE) - Timer 3 Channel 1 Compare Control 135
T3CC1 (0xCF) - Timer 3 Channel 1 Compare Value 135
T4CNT (0xEA) - Timer 4 Counter 135
T4CTL (0xEB) - Timer 4 Control 136
T4CCTL0 (0xEC) - Timer 4 Channel 0 Compare Control 137
T4CC0 (0xED) - Timer 4 Channel 0 Compare Value 137
T4CCTL1 (0xEE) - Timer 4 Channel 1 Compare Control 138
T4CC1 (0xEF) - Timer 4 Channel 1 Compare Value 138
TIMIF (0xD8) - Timers 1/3/4 Interrupt Mask/Flag 139
ADCL (0xBA) - ADC Data Low 143
ADCH (0xBB) - ADC Data High 143
ADCCON1 (0xB4) - ADC Control 1 143
ADCCON2 (0xB5) - ADC Control 2 144
ADCCON3 (0xB6) - ADC Control 3 145
RNDL (0xBC) - Random Number Generator Data Low Byte 147
RNDH (0xBD) - Random Number Generator Data High Byte 147
ENCCS (0xB3) - Encryption Control and Status 149
ENCDI (0xB1) - Encryption Input Data 149
ENCDO (0xB2) - Encryption Output Data 149
WDCTL (0xC9) - Watchdog Timer Control 151
U0CSR (0x86) - USART 0 Control and Status 157
U0UCR (0xC4) - USART 0 UART Control 158
U0GCR (0xC5) - USART 0 Generic Control 158
U0DBUF (0xC1) - USART 0 Receive/Transmit Data Buffer 159
U0BAUD (0xC2) - USART 0 Baud Rate Control 159
U1CSR (0xF8) - USART 1 Control and Status 159
U1UCR (0xFB) - USART 1 UART Control 160

U1GCR (0xFC) - USART 1 Generic Control 160
U1DBUF (0xF9) - USART 1 Receive/Transmit Data Buffer 161
U1BAUD (0xFA) - USART 1 Baud Rate Control 161
0xDF40: I2SCFG0 - I^2S Configuration Register 0 166
0xDF41: I2SCFG1 - I^2S Configuration Register 1 167
0xDF42: I2SDATL - I^2S Data Low Byte 167
0xDF43: I2SDATH - I^2S Data High Byte 167
0xDF44: I2SWCNT - I^2S Word Count Register 167
0xDF45: I2SSTAT - I^2S Status Register 168
0xDF46: I2SCLKF0 - I^2S Clock Configuration Register 0 168
0xDF47: I2SCLKF1 - I^2S Clock Configuration Register 1 168
0xDF48: I2SCLKF2 - I^2S Clock Configuration Register 2 168
0xDE00: USBADDR - Function Address 178
0xDE01: USBPOW - Power/Control Register 178
0xDE02: USBIIF - IN Endpoints and EP0 Interrupt Flags 178
0xDE04: USBOIF - Out Endpoints Interrupt Flags 178
0xDE06: USBCIF - Common USB Interrupt Flags 179
0xDE07: USBIIE - IN Endpoints and EP0 Interrupt Enable Mask 179
0xDE09: USBOIE - Out Endpoints Interrupt Enable Mask 180
0xDE0B: USBCIE - Common USB Interrupt Enable Mask 180
0xDE0C: USBFRML - Current Frame Number (Low byte) 180
0xDE0D: USBFRMH - Current Frame Number (High byte) 181
0xDE0E: USBINDEX - Current Endpoint Index Register 181
0xDE10: USBMAXI - Max. Packet Size for IN Endpoint{1 - 5} 181
0xDE11: USBCS0 - EP0 Control and Status (`USBINDEX=0`) 181
0xDE11: USBCSIL - IN EP{1 - 5} Control and Status Low 182
0xDE12: USBCSIH - IN EP{1 - 5} Control and Status High 182
0xDE13: USBMAXO - Max. Packet Size for OUT{1 - 5} Endpoint 182
0xDE14: USBCSOL - OUT EP{1 - 5} Control and Status Low 183
0xDE15: USBCSOH - OUT EP{1 - 5} Control and Status High 183
0xDE16: USBCNT0 - Number of Received Bytes in EP0 FIFO (`USBINDEX=0`) 183
0xDE16: USBCNTL - Number of Bytes in EP{1 - 5} OUT FIFO Low 183
0xDE17: USBCNTH - Number of Bytes in EP{1 - 5} OUT FIFO High 184
0xDE20: USBF0 - Endpoint 0 FIFO 184
0xDE22: USBF1 - Endpoint 1 FIFO 184
0xDE24: USBF2 - Endpoint 2 FIFO 184
0xDE26: USBF3 - Endpoint 3 FIFO 184
0xDE28: USBF4 - Endpoint 4 FIFO 184
0xDE2A: USBF5 - Endpoint 5 FIFO 184
RFIF (0xE9) - RF Interrupt Flags 188
RFIM (0x91) - RF Interrupt Mask 189
0xDF2F: IOCFG2 - Radio Test Signal Configuration (P1_7) 211
0xDF30: IOCFG1 - Radio Test Signal Configuration (P1_6) 211
0xDF31: IOCFG0 - Radio Test Signal Configuration (P1_5) 211
0xDF00: SYNC1 - Sync Word, High Byte 211
0xDF01: SYNC0 - Sync Word, Low Byte 211
0xDF02: PKTLEN - Packet Length 211
0xDF03: PKTCTRL1 - Packet Automation Control 212
0xDF04: PKTCTRL0 - Packet Automation Control 212
0xDF05: ADDR - Device Address 213
0xDF06: CHANNR - Channel Number 213
0xDF07: FSCTRL1 - Frequency Synthesizer Control 213
0xDF08: FSCTRL0 - Frequency Synthesizer Control 213
0xDF09: FREQ2 - Frequency Control Word, High Byte 213

0xDF0A: FREQ1 - Frequency Control Word, Middle Byte 213
0xDF0B: FREQ0 - Frequency Control Word, Low Byte 213
0xDF0C: MDMCFG4 - Modem configuration 214
0xDF0D: MDMCFG3 - Modem Configuration 214
0xDF0E: MDMCFG2 - Modem Configuration 215
0xDF0F: MDMCFG1 - Modem Configuration 216
0xDF10: MDMCFG0 - Modem Configuration 216
0xDF11: DEVIATN - Modem Deviation Setting 217
0xDF12: MCSM2 - Main Radio Control State Machine Configuration 217
0xDF13: MCSM1 - Main Radio Control State Machine Configuration 218
0xDF14: MCSM0 - Main Radio Control State Machine Configuration 218
0xDF15: FOCCFG - Frequency Offset Compensation Configuration 219
0xDF16: BSCFG - Bit Synchronization Configuration 220
0xDF17: AGCCTRL2 - AGC Control 221
0xDF18: AGCCTRL1 - AGC Control 222
0xDF19: AGCCTRL0 - AGC Control 223
0xDF1A: FREND1 - Front End RX Configuration 223
0xDF1B: FREND0 - Front End TX Configuration 224
0xDF1C: FSCAL3 - Frequency Synthesizer Calibration 224
0xDF1D: FSCAL2 - Frequency Synthesizer Calibration 224
0xDF1E: FSCAL1 - Frequency Synthesizer Calibration 225
0xDF1F: FSCAL0 - Frequency Synthesizer Calibration 225
0xDF23: TEST2 - Various Test Settings 225
0xDF24: TEST1 - Various Test Settings 225
0xDF25: TEST0 - Various Test Settings 225
0xDF27: PA_TABLE7 - PA Power Setting 7 225
0xDF28: PA_TABLE6 - PA Power Setting 6 225
0xDF29: PA_TABLE5 - PA Power Setting 5 226
0xDF2A: PA_TABLE4 - PA Power Setting 4 226
0xDF2B: PA_TABLE3 - PA Power Setting 3 226
0xDF2C: PA_TABLE2 - PA Power Setting 2 226
0xDF2D: PA_TABLE1 - PA Power Setting 1 226
0xDF2E: PA_TABLE0 - PA Power Setting 0 226
0xDF36: PARTNUM - Chip ID[15:8] 226
0xDF37: VERSION - Chip ID[7:0] 226
0xDF38: FREQEST - Frequency Offset Estimate from Demodulator 226
0xDF39: LQI - Demodulator Estimate for Link Quality 227
0xDF3A: RSSI - Received Signal Strength Indication 227
0xDF3B: MARCSTATE - Main Radio Control State Machine State 227
0xDF3C: PKTSTATUS - Packet Status 228
0xDF3D: VCO_VC_DAC - Current Setting from PLL Calibration Module 228

17 Package Description (QFN 36)

All dimensions are in millimeters, angles in degrees. *Note: The* **CC1110Fx/CC1111Fx** *is available in RoHS lead-free package only. Compliant with JEDEC: MO-220.*

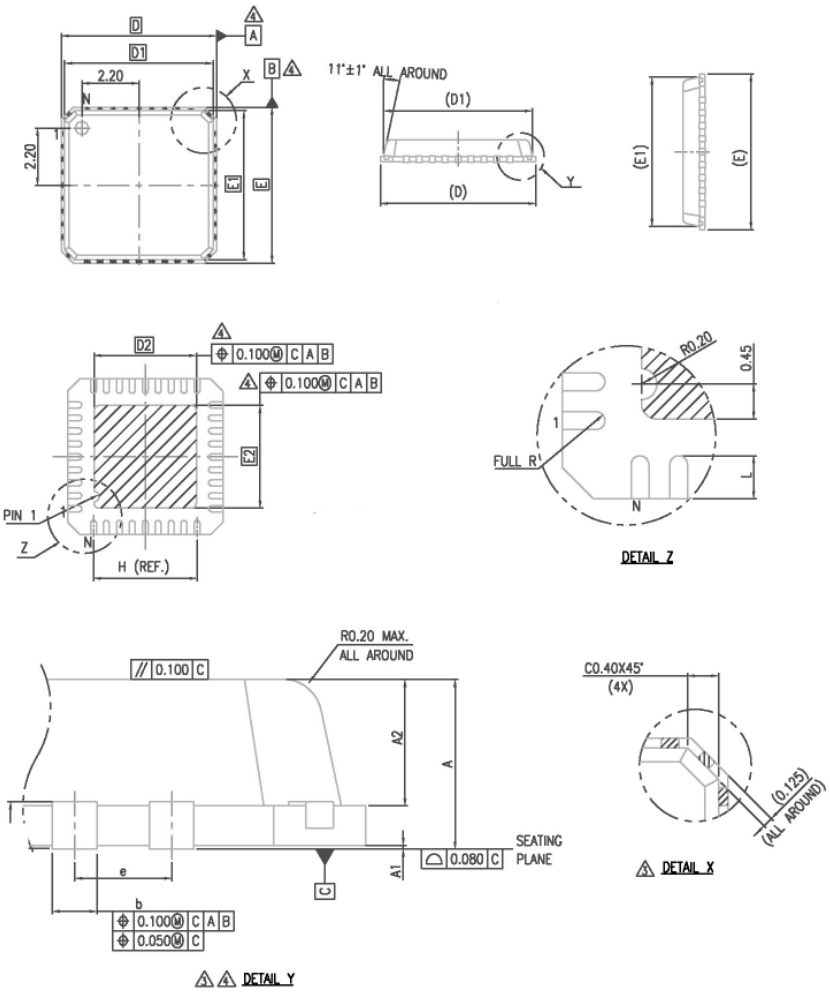

Figure 62: Package Dimensions Drawing

Quad Leadless Package (QLP)													
		A	A1	A2	D	D1	E	E1	e	b	L	D2	E2
QFN 36	Min	0.80	0.005	0.60	5.90	5.65	5.90	5.65		0.18	0.45		
		0.85	0.025	0.65	6.00	5.75	6.00	5.75	0.50	0.23	0.55	4.40	4.40
	Max	0.90	0.045	0.70	6.10	5.85	6.10	5.85		0.30	0.65		

Table 74: Package Dimensions

17.1 Recommended PCB Layout for Package (QFN 36)

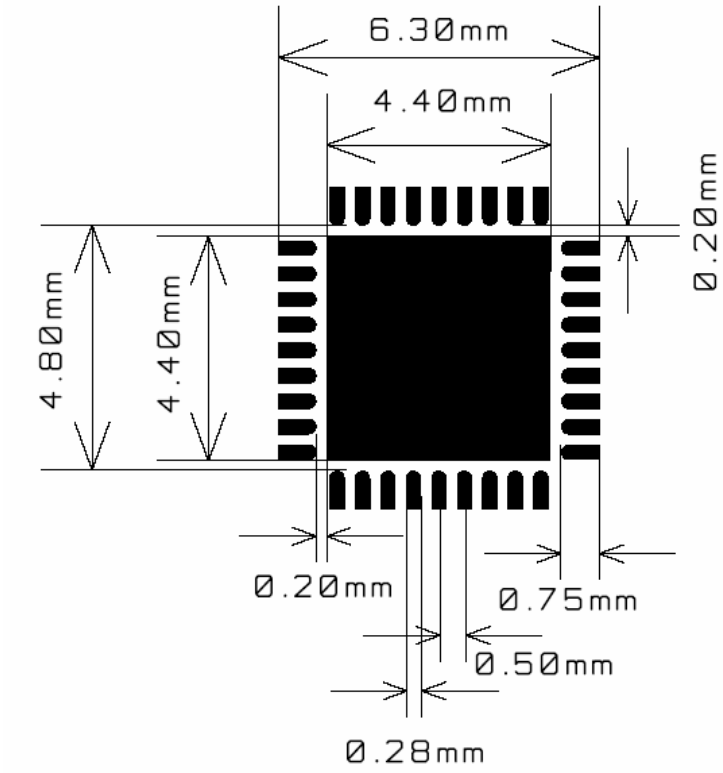

Figure 63: Recommended PCB Layout for QFN 36 Package

Note: The figure is an illustration only and not to scale. There are nine 14 mil diameter via holes distributed symmetrically in the ground pad under the package. See also the CC1110EM reference design [1] and theCC1111 USB-Dongle reference design [4].

Thermal Resistance	
Air velocity [m/s]	0
Rth,j-a [C/W]	32

Table 75: Thermal Properties of QFN 36 Package

17.2 Soldering information

The recommendations for lead-free reflow in IPC/JEDEC J-STD-020D should be followed.

The lead finish is annealed (150 °C for 1 hr) pure matte tin.

17.3 Tray Specification

Tray Specification				
Package	Tray Length	Tray Width	Tray Height	Units per Tray
QFN 36	322.6 mm	135.9 mm	7.62 mm	490

Table 76: Tray Specification

17.4 Carrier Tape and Reel Specification

Carrier tape and reel is in accordance with EIA Specification 481.

Tape and Reel Specification						
Package	Carrier Tape Width	Component Pitch	Hole Pitch	Reel Diameter	Reel Hub Diameter	Units per Reel
QFN 36	16 mm	12 mm	4 mm	13 inches	100 mm	2500

Table 77: Carrier Tape and Reel Specification

18 Ordering Information

Ordering Part Number	Description	Minimum Order Quantity
CC1110F8RSP	8 kB flash, 1 kB RAM, System-on-Chip RF Transceiver. QFN 36 package, RoHS compliant Pb-free assembly, Tray with 490 pcs per tray.	490
CC1110F8RSPR	8 kB flash, 1 kB RAM, System-on-Chip RF Transceiver. QFN 36 package, RoHS compliant Pb-free assembly, T&R with 2500 pcs per reel.	2500
CC1110F16RSP	16 kB flash, 2 kB RAM, System-on-Chip RF Transceiver. QFN 36 package, RoHS compliant Pb-free assembly, Tray with 490 pcs per tray.	490
CC1110F16RSPR	16 kB flash, 2 kB RAM, System-on-Chip RF Transceiver. QFN 36 package, RoHS compliant Pb-free assembly, T&R with 2500 pcs per reel.	2500
CC1110F32RSP	32 kB flash, 4 kB RAM, System-on-Chip RF Transceiver. QFN 36 package, RoHS compliant Pb-free assembly, Tray with 490 pcs per tray.	490
CC1110F32RSPR	32 kB flash, 4 kB RAM, System-on-Chip RF Transceiver. QFN 36 package, RoHS compliant Pb-free assembly, T&R with 2500 pcs per reel.	2500
CC1111F8RSP	8 kB flash, 1 kB RAM, full-speed USB, System-on-Chip RF Transceiver. QFN 36 package, RoHS compliant Pb-free assembly, Tray with 490 pcs per tray.	490
CC1111F8RSPR	8 kB flash, 1 kB RAM, full-speed USB, System-on-Chip RF Transceiver. QFN 36 package, RoHS compliant Pb-free assembly, T&R with 2500 pcs per reel.	2500
CC1111F16RSP	16 kB flash, 2 kB RAM, full-speed USB, System-on-Chip RF Transceiver. QFN 36 package, RoHS compliant Pb-free assembly, Tray with 490 pcs per tray.	490
CC1111F16RSPR	16 kB flash, 2 kB RAM, full-speed USB, System-on-Chip RF Transceiver. QFN 36 package, RoHS compliant Pb-free assembly, T&R with 2500 pcs per reel.	2500
CC1111F32RSP	32 kB flash, 4 kB RAM, full-speed USB, System-on-Chip RF Transceiver. QFN 36 package, RoHS compliant Pb-free assembly, Tray with 490 pcs per tray.	490
CC1111F32RSPR	32 kB flash, 4 kB RAM, full-speed USB, System-on-Chip RF Transceiver. QFN 36 package, RoHS compliant Pb-free assembly, T&R with 2500 pcs per reel.	2500
CC1110-CC1111DK	CC1110Fx and CC1111Fx Development Kit	1
CC1110EMK433	CC1110 Evaluation Module Kit, for 433 MHz operation	1
CC1110EMK868-915	CC1110 Evaluation Module Kit, for 868/915 MHz operation	1
CC1111EMK868-915	CC1111 Evaluation Module Kit, for 868/915 MHz operation	1

Table 78: Ordering Information

19 References

[1] CC1110EM315 Reference Design (swrr050.zip)

[2] CC1110EM433 Reference Design (swrr047.zip)

[3] CC1110EM868 - 915 Reference Design (swrr049.zip)

[4] CC1111 USB-Dongle Reference Design (swrr049.zip)

[5] NIST FIPS Pub 197: Advanced Encryption Standard (AES), Federal Information Processing Standards Publication 197, US Department of Commerce/N.I.S.T., November 26, 2001. Available from the NIST website.

http://csrc.nist.gov/publications/fips/fips197/fips-197.pdf

[6] Universal Serial Bus Revision 2.0 Specification. Available from the USB Implementors Forum website.

http://www.usb.org/developers/docs/

[7] I^2S bus specification, Philips Semiconductors, Available from the Philips Semiconductors website.

http://www.semiconductors.philips.com/acrobat_download/various/I2SBUS.pdf

[8] IEEE Std 1241-2000, IEEE standard for terminology and test methods for analog-to-digital converters.

[9] SmartRF® Studio (swrc046.zip)

[10] AN001 SRD regulations for license free transceiver operation(swra090.pdf)

[11] ISM-Band and Short Range Device Regulatory Compliance Overview (swra048.pdf)

[12] DN006 CC11xx settings for FCC15.247 Solutions (swra123.pdf)

[13] AN050 Using the CC1101 in the European 868 MHz SRD band (swra146.pdf)

[14] DN016 Compact Antenna Solutions for 868/915MHz (swra160.pdf)

[15] DN110 State Transition Times on CC111xFx and CC251xFx(swra191.pdf)

[16] DN505 RSSI Interpretation and Timing (swra114.pdf)

20 General Information

20.1 Document History

Revision	Date	Description/Changes
SWRS033	2006.01.04	First release
SWRS033A	2006.05.11	Preliminary status updated
SWRS033B	2007.09.14	First data sheet for released product. Preliminary data sheets exist for engineering samples and pre-production prototype devices, but these data sheets are not complete and may be incorrect in some aspects compared with the released product.
SWRS033C	2007.09.20	Data sheet update before release of product. - Operating frequency range changed to 391 - 464 MHz and 782 - 928 MHz - Changed restricted range for PA power in Section 13.15 (now 0x68 to 0x6F) - Added information about register `TEST1` when TX-if-CCA is to be used - Changed register `FREQEST` and `FSCTRL0` max range from ±20910 to ±209 - Added reference to SmartRF Studio for register `MCSM0`. - Changed bit description for bit `FSCAL2.VCO_CORE_H_EN` - Added Section 12.1.5.2, describing data rate limitations caused by system clock speed - Added power numbers for RX (Table 6) when using other system clock speeds
SWRS033D	2007.10.19	Data sheet update before release of ***CC1111Fx***. - Electrical Specification Section 6 updated with ***CC1111Fx*** performance - Minimum power down time of ***CC1110Fx*** high speed crystal oscillator stated in Section 6.4.1, Section 6.4.2, Section 12.1.1 and Section 12.1.5.1. - Removed 3rd overtone crystal option for ***CC1111Fx*** - Replaced Figure 14, Figure 15, and Figure 16 to correct error in address ranges. - Fixed Table 32 - Fixed bit range for register `FADDRH` and stated that register `WORTIME0` and `WORTIME1` defines a combined 16 bit word (`WORTIME`) - Replaced all occurrences of `WORCTL` with `WORCTRL` - Made consistent use of VDD for power with reference to power pin if so needed - Corrected part number for these devices, register `PARTNUM` - Stated that P1_0 and P1_1 does not have pull capability in register `P2INP` - Corrected code example in Figure 49 - Corrected unimplemented RAM range in Section 10.2.3.1 - Updated Sections 12.1.3, 12.1.5.1, and 12.1.5.3 with information about system clock source change - Rewrote RAM range in Section 12.3.2 - Updated Section 12.8.2 with information about power modes. Changed code examples - Changed heading text for Section 12.8.5 - Corrected received symbol write and read location in Section 13.11.2
SWRS033E	2007.10.26	- Corrected Table of contents - Updated guard time and stated for which crystal this applies in Table 11

Revision	Date	Description/Changes
SWRS033F	2007.11.23	- Changed title on front page - TX power consumption @ 1.2 kBaud, −6 dBm output power changed to 15.2 mA on front page - “Crystal shunt capacitance” changed to C_0 in Table 13 - Temperature coefficient changed to 2.47 mV/°C in Table 17 - $Z_{out\ @\ 868/915\ MHz}$ = 86.5 + j43 Ω changed to $Z_{out\ @\ 868\ MHz}$ = 86.5 + j43 Ω - Changed component name in Figure 10, Figure 11, and Figure 12 in accordance with reference designs and added optional filter in Figure 11 and Figure 12 - Table 28: Made changes to component names and descriptions - Table 29: Changes to component names. Added components for optional filter. R2626/R263 changed to 33 Ω. C203/C214 changed to 22 pF - Table 37: Added footer explaining opcode for ACALL and AJMP - `CLKCON.OSC` bit. Changed description. It is not longer necessary to set `SLEEP.OSC_PD=0` to power up the HS crystal oscillator. - 10.5.1: Added note emphasizing that an interrupt must not be enabled without having proper code located at the corresponding interrupt vector address - :10.5.2: Changes made to code example. - 12.1.5: Changed HS crystal oscillator operating range to 26 - 27 MHz - 12.1.5.1: Changed HS crystal oscillator operating range to 26 - 27 MHz and HS RCOSC operating range to 13 - 13.5 MHz - 12.1.5.1 and 12.1.7: Added info regarding retention of HS RCOSC calibration result. - 12.1.5.2: Rewritten to improve readability - 12.1.5.3: Changed low power RCOSC range to 34.667 - 36 kHz. Added/rewritten info regarding calibration of the low power RCOSC. - 12.5: Chapter rewritten to be more consistent in the use of the terms “transfer” and “transfer count”. Added new info regarding the LEN setting. Changes made to Figure 26 and Figure 27 - 12.6.2.1 and 12.6.2.2: Emphasized that the timer wraps around/is loaded with 0x0000 on the next timer tick after the terminal count value is reached - 12.8.4: Added more detailed info about interrupt and associated flags - 12.9.3 and 12.9.3.1 Emphasized that the timer wraps around/is loaded with 0x00 on the next timer tick after the terminal count value is reached - `USBCIF.RESUMIF` changed to `USBCIF.RESUMEIF` several places in the document - 13.7.1: Added note saying that frequency offset compensation is not supported for ASK/OOK - 13.11.2: Added note saying that when FEC is used, `CLKCON.CLKSPD` must be 000 -.`PKTCTRL0`: Bit 3 set as reserved - `FSCTRL0`: Changed range to ±202 kHz to ±209 kHz for ***CC1110Fx*** - `MDMCFG2.DEM_DCFILT_OFF=1`: Only for data rates ≤ 100 kBaud: - `MDMCFG2.MOD_FORMAT`: Added setting for ASK/OOK - `MCSM2.RX_TIME_RSSI`: Added note regarding ASK/OOK modulation - `FOCCFG.FOC_LIMIT`: Added note regarding ASK/OOK modulation `AGCCTRL0.FILTER_LENGTH` Added note regarding ASK/OOK modulation - `TEST2`: Changed value for improved sensitivity - `FREQEST`: Changed range to ±202 kHz to ±209 kHz for ***CC1110Fx.*** Added info regarding ASK/OOK modulation - `LQI.CRC_OK`: Removed reference to `CC2400_EN` bit, which has been removed

Revision	Date	Description/Changes
SWRS033G	2008.07.11	- Changed description of `T1CCTL1.MODE` bit. - `UxGDR` changed to `UxGCR` several places in the document - Changed `FREQ2.FREQ[21:16]` reset value from 11110 to 011110 - Added changes to the `DEVIATN` register, and added also info regarding the same register to sections 13.9.1, 13.9.2, and 13.9.3 - 12.14.2.2: Changed description of the `UxCSR.ACTIVE` bit - 12.8: Added note stating that the Sleep timer should not be used in active mode. This info has in earlier edition only been available in section 8.1 - Added section 9.4: Reference Signal - Table 57 and Table 58: F_{sck} changed to F_s - 12.8.1: WOREVT1 = desired event0; changed to WOREVT1 = desired event0 >> 8; - Table 39: Added footnote saying that the Sleep Timer compare interrupt has additional interrupt mask bits and interrupt flags found in its SFRs - Updated Figure 26 - Changed the description of `PKTSTATUS.SFD` - `MCSM0.FS_AUTOCAL=1` changed to `MCSM0.FS_AUTOCAL=01` and `MCSM0.FS_AUTOCAL=0` changed to `MCSM0.FS_AUTOCAL=00` throughout the document - 13.1: Added note about SIDLE strobe - Table 16, Table 71, and Section 13.18: Changed the state transition timing - 13.10.3: Added reference to DN505 [16] regarding RSSI response time. - Changes made to the description of `I2SCFG0.ULAWE` and `I2SCFG0.ULAWC` - Section 13.9 and 13.9.2 and `MDMCFG2` register: Added info saying that Manchester encoding/decoding should not be used when using MSK modulation. - Table 11: Changes done to the condition/note on Power Down Guard Time - Added Section 6.11.1 (info regarding the RESET_N pin being sensitive to noise) - Changes made to the `ADCCON1` register. - Changes made to Section 12.11.2.1 regarding how to generate pseudo-random bytes. - Section13.3.1.1: Added note explaining how the RFTXRXIF flag should be cleared when it is not cleared by HW. - The drive strength for I/O pins in output mode is not controlled by the `PICTL` register but by `IOCFG1.GDO_DS`. This has been changes several places in the data sheet. - Table 14: Changed the minimum calibrated frequency to 34.7 kHz Removed the Sleep Timer trigger for the DMA since the Sleep Timer should not be used in active mode. - Section 13.12.1: Added note regarding RSSI response time when using `MCSM1.RXOFF_MODE=11` - Changed the description of the `T2CTL.INT` field - Several changes added throughout the document regarding calibration of the two RC oscillators - Added info several places in the document stating that the I^2S interface will have precedence in cases where other peripherals (except for the debug interface) are configured to be on the same location even if the pins are configured to be general purpose I/O pins. - Table 78: Changed ordering information for the Development Kits (DKs) - QLP36 / QLP 36 replaced by QFN 36 -12.8.2: Changes made to the description on how entering PM{0 - 2}, updating `EVENT0`, and resetting the sleep timer should be done with respect to the 32 kHz clock source.

Table 79: Document History

20.2 Product Status Definitions

Data Sheet Identification	Product Status	Definition
Advance Information	Planned or Under Development	This data sheet contains the design specifications for product development. Specifications may change in any manner without notice.
Preliminary	Experimental and Prototype Devices	This data sheet contains preliminary data, and supplementary data will be published at a later date. Texas Instruments reserves the right to make changes at any time without notice in order to improve design and supply the best possible product. The product at this point is not yet fully qualified.
No Identification Noted	Full Production	This data sheet contains the final specifications. Texas Instruments reserves the right to make changes at any time without notice in order to improve design and supply the best possible product.
Obsolete	Not In Production	This data sheet contains specifications on a product that has been discontinued by Texas Instruments. The data sheet is printed for reference information only.

Table 80: Product Status Definitions

21 Address Information

Texas Instruments Norway AS
Gaustadalléen 21
N-0349 Oslo
NORWAY
Tel: +47 22 95 85 44
Fax: +47 22 95 85 46
Web site: http://www.ti.com/lpw

22 TI Worldwide Technical Support

Internet

TI Semiconductor Product Information Center Home Page:	support.ti.com
TI Semiconductor KnowledgeBase Home Page:	support.ti.com/sc/knowledgebase

Product Information Centers

Americas

Phone:	+1(972) 644-5580
Fax:	+1(972) 927-6377
Internet/Email:	support.ti.com/sc/pic/americas.htm

Europe, Middle East and Africa

Phone:	
Belgium (English)	+32 (0) 27 45 54 32
Finland (English)	+358 (0) 9 25173948
France	+33 (0) 1 30 70 11 64
Germany	+49 (0) 8161 80 33 11
Israel (English)	180 949 0107
Italy	800 79 11 37
Netherlands (English)	+31 (0) 546 87 95 45
Russia	+7 (4) 95 98 10 701
Spain	+34 902 35 40 28
Sweden (English)	+46 (0) 8587 555 22
United Kingdom	+44 (0) 1604 66 33 99
Fax:	+49 (0) 8161 80 2045
Internet:	support.ti.com/sc/pic/euro.htm

Japan

Fax	International	+81-3-3344-5317
	Domestic	0120-81-0036
Internet/Email	International	support.ti.com/sc/pic/japan.htm
	Domestic	www.tij.co.jp/pic

Asia

Phone	International	+886-2-23786800
	Domestic	Toll-Free Number
	Australia	1-800-999-084
	China	800-820-8682
	Hong Kong	800-96-5941
	India	+91-80-51381665 (Toll)
	Indonesia	001-803-8861-1006
	Korea	080-551-2804
	Malaysia	1-800-80-3973
	New Zealand	0800-446-934
	Philippines	1-800-765-7404
	Singapore	800-886-1028
	Taiwan	0800-006800
	Thailand	001-800-886-0010
Fax		+886-2-2378-6808
Email		tiasia@ti.com or ti-china@ti.com
Internet		support.ti.com/sc/pic/asia.htm

TAPE AND REEL INFORMATION

REEL DIMENSIONS

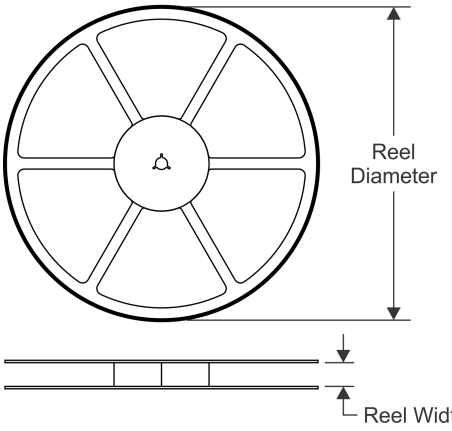

TAPE DIMENSIONS

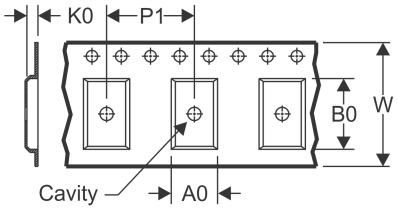

A0	Dimension designed to accommodate the component width
B0	Dimension designed to accommodate the component length
K0	Dimension designed to accommodate the component thickness
W	Overall width of the carrier tape
P1	Pitch between successive cavity centers

QUADRANT ASSIGNMENTS FOR PIN 1 ORIENTATION IN TAPE

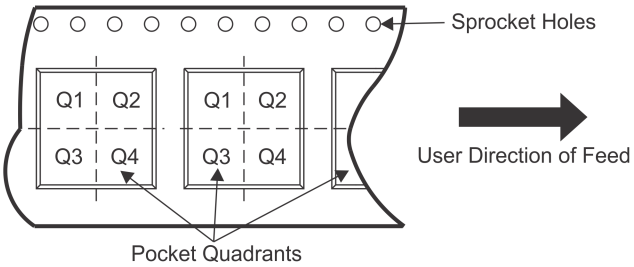

*All dimensions are nominal

Device	Package Type	Package Drawing	Pins	SPQ	Reel Diameter (mm)	Reel Width W1 (mm)	A0 (mm)	B0 (mm)	K0 (mm)	P1 (mm)	W (mm)	Pin1 Quadrant
CC1111F32RSPR	VQFN	RSP	36	2500	330.0	16.4	6.3	6.3	1.1	12.0	16.0	Q2

TAPE AND REEL BOX DIMENSIONS

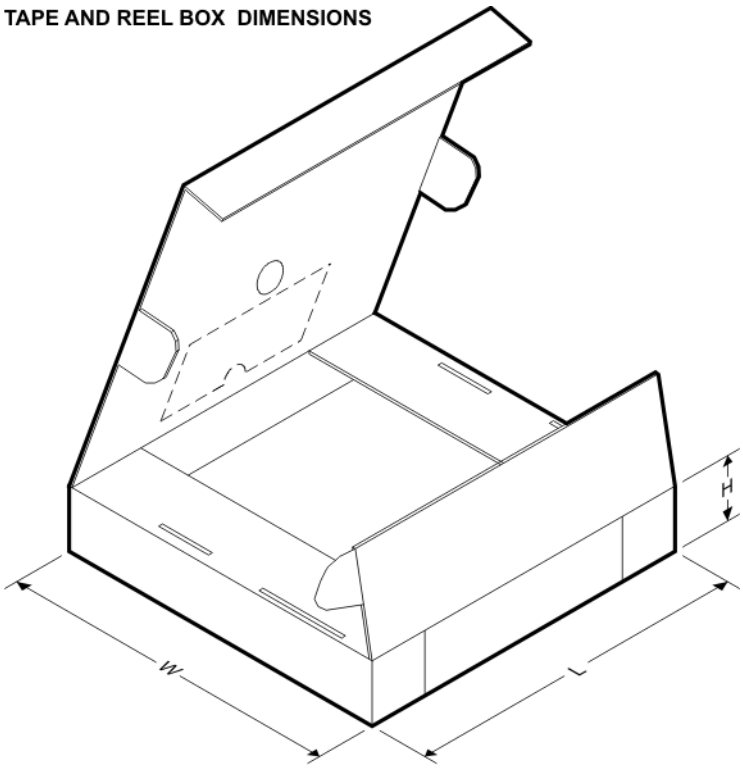

*All dimensions are nominal

Device	Package Type	Package Drawing	Pins	SPQ	Length (mm)	Width (mm)	Height (mm)
CC1111F32RSPR	VQFN	RSP	36	2500	378.0	70.0	346.0

IMPORTANT NOTICE

Texas Instruments Incorporated and its subsidiaries (TI) reserve the right to make corrections, enhancements, improvements and other changes to its semiconductor products and services per JESD46, latest issue, and to discontinue any product or service per JESD48, latest issue. Buyers should obtain the latest relevant information before placing orders and should verify that such information is current and complete. All semiconductor products (also referred to herein as “components”) are sold subject to TI’s terms and conditions of sale supplied at the time of order acknowledgment.

TI warrants performance of its components to the specifications applicable at the time of sale, in accordance with the warranty in TI’s terms and conditions of sale of semiconductor products. Testing and other quality control techniques are used to the extent TI deems necessary to support this warranty. Except where mandated by applicable law, testing of all parameters of each component is not necessarily performed.

TI assumes no liability for applications assistance or the design of Buyers’ products. Buyers are responsible for their products and applications using TI components. To minimize the risks associated with Buyers’ products and applications, Buyers should provide adequate design and operating safeguards.

TI does not warrant or represent that any license, either express or implied, is granted under any patent right, copyright, mask work right, or other intellectual property right relating to any combination, machine, or process in which TI components or services are used. Information published by TI regarding third-party products or services does not constitute a license to use such products or services or a warranty or endorsement thereof. Use of such information may require a license from a third party under the patents or other intellectual property of the third party, or a license from TI under the patents or other intellectual property of TI.

Reproduction of significant portions of TI information in TI data books or data sheets is permissible only if reproduction is without alteration and is accompanied by all associated warranties, conditions, limitations, and notices. TI is not responsible or liable for such altered documentation. Information of third parties may be subject to additional restrictions.

Resale of TI components or services with statements different from or beyond the parameters stated by TI for that component or service voids all express and any implied warranties for the associated TI component or service and is an unfair and deceptive business practice. TI is not responsible or liable for any such statements.

Buyer acknowledges and agrees that it is solely responsible for compliance with all legal, regulatory and safety-related requirements concerning its products, and any use of TI components in its applications, notwithstanding any applications-related information or support that may be provided by TI. Buyer represents and agrees that it has all the necessary expertise to create and implement safeguards which anticipate dangerous consequences of failures, monitor failures and their consequences, lessen the likelihood of failures that might cause harm and take appropriate remedial actions. Buyer will fully indemnify TI and its representatives against any damages arising out of the use of any TI components in safety-critical applications.

In some cases, TI components may be promoted specifically to facilitate safety-related applications. With such components, TI’s goal is to help enable customers to design and create their own end-product solutions that meet applicable functional safety standards and requirements. Nonetheless, such components are subject to these terms.

No TI components are authorized for use in FDA Class III (or similar life-critical medical equipment) unless authorized officers of the parties have executed a special agreement specifically governing such use.

Only those TI components which TI has specifically designated as military grade or “enhanced plastic” are designed and intended for use in military/aerospace applications or environments. Buyer acknowledges and agrees that any military or aerospace use of TI components which have ***not*** been so designated is solely at the Buyer's risk, and that Buyer is solely responsible for compliance with all legal and regulatory requirements in connection with such use.

TI has specifically designated certain components as meeting ISO/TS16949 requirements, mainly for automotive use. In any case of use of non-designated products, TI will not be responsible for any failure to meet ISO/TS16949.

Products		**Applications**	
Audio	www.ti.com/audio	Automotive and Transportation	www.ti.com/automotive
Amplifiers	amplifier.ti.com	Communications and Telecom	www.ti.com/communications
Data Converters	dataconverter.ti.com	Computers and Peripherals	www.ti.com/computers
DLP® Products	www.dlp.com	Consumer Electronics	www.ti.com/consumer-apps
DSP	dsp.ti.com	Energy and Lighting	www.ti.com/energy
Clocks and Timers	www.ti.com/clocks	Industrial	www.ti.com/industrial
Interface	interface.ti.com	Medical	www.ti.com/medical
Logic	logic.ti.com	Security	www.ti.com/security
Power Mgmt	power.ti.com	Space, Avionics and Defense	www.ti.com/space-avionics-defense
Microcontrollers	microcontroller.ti.com	Video and Imaging	www.ti.com/video
RFID	www.ti-rfid.com		
OMAP Applications Processors	www.ti.com/omap	**TI E2E Community**	e2e.ti.com
Wireless Connectivity	www.ti.com/wirelessconnectivity		

Mailing Address: Texas Instruments, Post Office Box 655303, Dallas, Texas 75265
Copyright © 2013, Texas Instruments Incorporated

AMEYA360
Components Supply Platform

Authorized Distribution Brand :

Website :

Welcome to visit www.ameya360.com

Contact Us :

- ## Address :

401 Building No.5, JiuGe Business Center, Lane 2301, Yishan Rd
Minhang District, Shanghai , China

- ## Sales :

Direct +86 (21) 6401-6692

Email amall@ameya360.com

QQ 800077892

Skype ameyasales1 ameyasales2

- ## Customer Service :

Email service@ameya360.com

- ## Partnership :

Tel +86 (21) 64016692-8333

Email mkt@ameya360.com