DRAWING No.: M702-230642	IF IN DOUBT – ASK	©	NOT TO SCALE	THIRD ANGLE PROJECTION	ALL DIMENSIONS IN mm

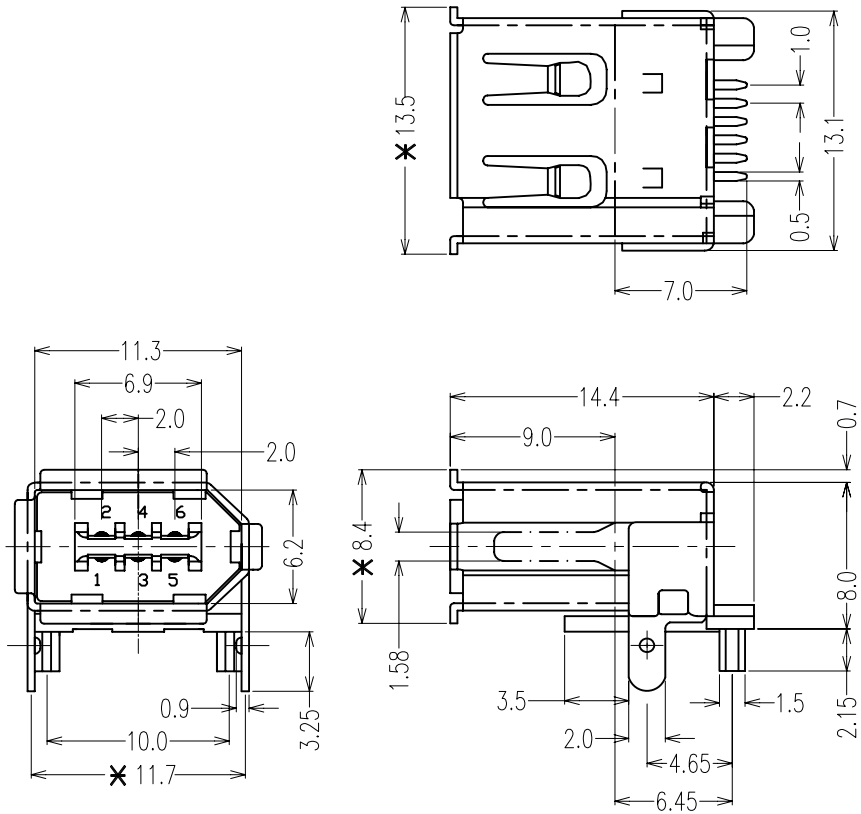

SPECIFICATIONS:

MATERIAL:–

HOUSING: NYLON PA9T G.F.(UL94V–0), BLACK
TERMINAL: BRASS
SHIELD: BRASS

FINISH:–

TERMINAL: GOLD PLATING ON CONTACT AREA,
TIN PLATING ON SOLDER TAIL
SHIELD: NICKEL PLATING ALL OVER

ELECTRICAL:–

CURRENT RATING: 1.5 AMP MAX.
DIELECTRIC WITHSTANDING VOLTAGE: 500V AC RMS FOR 60 SECS
CONTACT RESISTANCE: 30 mΩ MAX.
INSULATION RESISTANCE: 100 MΩ MIN. AT 500V DC

MECHANICAL:–

DURABILITY: 1500 CYCLES

ENVIRONMENTAL:–

TEMPERATURE RANGE: –55°C ~ +85°C

NOTES: ALL DIMENSIONS AND NOTES MARKED ✱ ARE CRITICAL AND MUST BE CHECKED IN ACCORDANCE WITH QUALITY DOC. Q1–02A

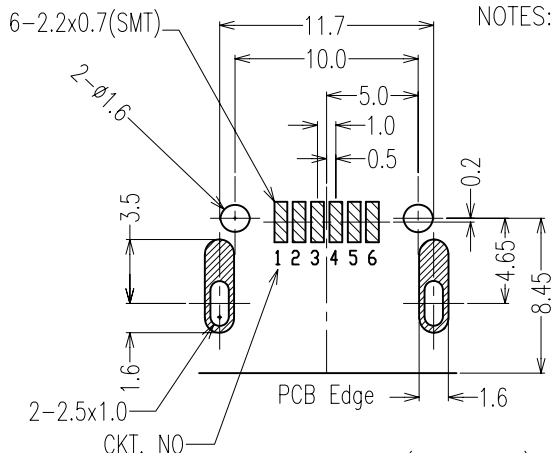

PCB LAYOU (TOP VIEW)

NAME	ISS.	DATE	C/NOTE
Allan	2	28.01.08	A109
Allan	1	01.08.06	–

APPROVED:
CHECKED:
DRAWN: Allan
CUSTOMER REF.:
ASSEMBLY DRG:

FireWire

TOLERANCES
X.X = ±0.30mm
X.XX = ±0.30mm

HARWIN

HARWIN USA	HARWIN Europe (UK)	HARWIN Asia
TEL: 603 893 5376	TEL: 023 9231 4545	TEL: +65 6 779 4909
FAX: 603 893 5396	FAX: 023 9231 4590	FAX: +65 6 779 3868
mis@harwin.com	mis@harwin.co.uk	mis@harwin.com.sg

THIS DRAWING AND ANY INFORMATION OR DESCRIPTIVE MATTER SET OUT HEREON ARE CONFIDENTIAL AND COPYRIGHT PROPERTY OF THE HARWIN GROUP AND MUST NOT BE DISCLOSED, LOANED, COPIED OR USED FOR MANUFACTURING, TENDERING OR FOR ANY OTHER PURPOSE WITHOUT THEIR WRITTEN PERMISSION.

TOLERANCES
X. = ±1mm
X.X = ±0.25mm
X.XX = ±0.10mm
X.XXX = ±0.01mm
ANGLES = ±5°
UNLESS STATED

MATERIAL: SEE NOTES
FINISH: SEE NOTES
S/AREA: mm²

TITLE: IEEE 1394, PCB MOUNT SMT TYPE, METAL SHIELD, FEMALE

DRAWING NUMBER: M702-230642

SHT 1 OF 1

AMEYA360
Components Supply Platform

Authorized Distribution Brand :

Website :

Welcome to visit www.ameya360.com

Contact Us :

- ### Address :

  401 Building No.5, JiuGe Business Center, Lane 2301, Yishan Rd
  Minhang District, Shanghai , China

- ### Sales :

  Direct +86 (21) 6401-6692

  Email amall@ameya360.com

  QQ 800077892

  Skype ameyasales1 ameyasales2

- ### Customer Service :

  Email service@ameya360.com

- ### Partnership :

  Tel +86 (21) 64016692-8333

  Email mkt@ameya360.com