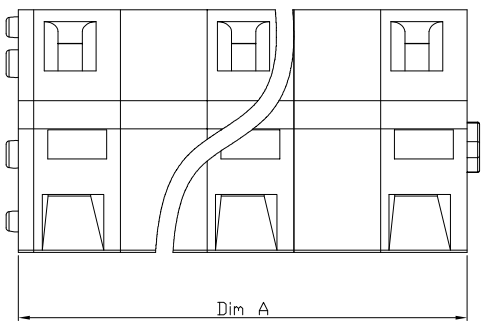

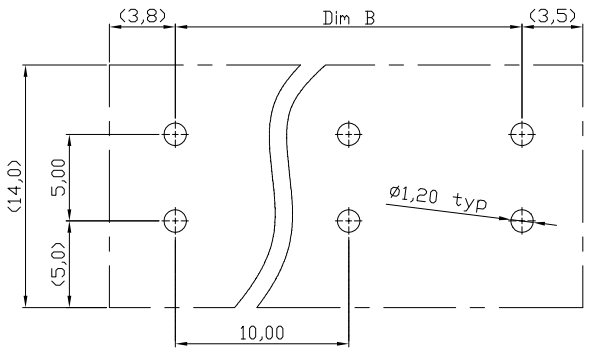

PCB Layout
Bottom view

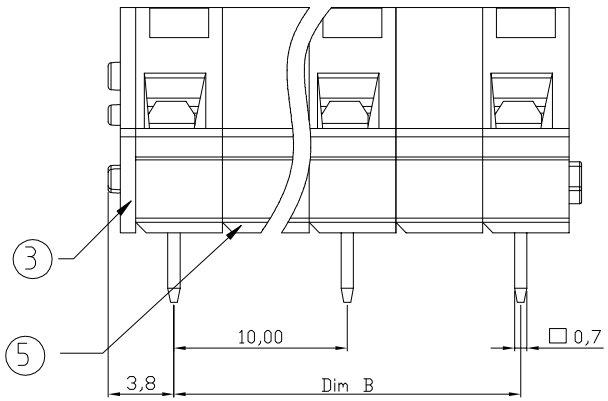

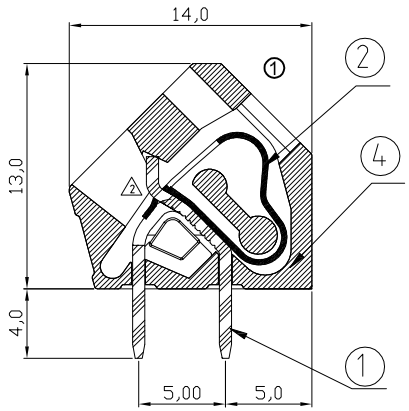

Material

Item 1 Terminal body (Contact pin): Brass, Tin plated
Item 2 Spring clamp: Stainless steel
Item 3 Terminal cover: Thermoplastic (UL94V-0) Grey(RAL7004/P)
Item 4 Terminal body: Thermoplastic (UL94V-0) Grey(RAL7004/P)
Item 5 Pad board: Thermoplastic (UL94V-0) Grey(RAL7004/P)

Electrical cULus

Voltage rating: 300VAC
Current rating: 15A
Wire range:
Solid wire(AWG): 12-28
Stranded wire(AWG): 12-28
Wire strip length: 5-6mm
Withstanding Voltage: 1.6KV
Operating temperature: -40°C to +115°C
Soldering temperature: 260°C±5°C/5 Sec
Safety approval : c us

① Dimension

Dim A	(N-1)x10.0+5.9
Dim B	(N-1)x10.0

N=Number of poles

Poles	Dim B	Dim A
2p-4p	±0.15	±0.20
5p-7p	±0.20	±0.25
8p-10p	±0.25	±0.30
11p-12p	±0.30	±0.40

RoHS compliant
Unit: mm

① File No.: E349947

Scale	Free
TOLERANCE	
X.	±0.50
X.X	±0.30
X.XX	±0.10
DIM	TOL
X.°	±1°
Angle	TOL

Id.	Modification	Date	Name
①	Update to new drawing and add UL	14.03.2016	Amy
⓪	Drawn	05.05.2010	Dean

	Date	Name
Drawn	05.05.2010	Dean
Approved	14.03.2016	Amy

ASSMANN WSW components

Customer-No.

ASSMANN WSW-No. A-TB100-HGxx

Drawing-No. ASS 3653A CO

rev01

Replace

Sheet

AMEYA360
Components Supply Platform

Authorized Distribution Brand :

Website :

Welcome to visit www.ameya360.com

Contact Us :

Address :

401 Building No.5, JiuGe Business Center, Lane 2301, Yishan Rd
Minhang District, Shanghai , China

Sales :

Direct +86 (21) 6401-6692

Email amall@ameya360.com

QQ 800077892

Skype ameyasales1 ameyasales2

Customer Service :

Email service@ameya360.com

Partnership :

Tel +86 (21) 64016692-8333

Email mkt@ameya360.com