THIS DOCUMENT IS THE PROPERTY OF KEYSTONE ELECTRONICS CORP. AND SHALL NOT BE REPRODUCED, DISTRIBUTED OR USED AS A BASIS FOR MANUFACTURE WITHOUT PRIOR WRITTEN PERMISSION FROM KEYSTONE ELECTRONICS CORP.

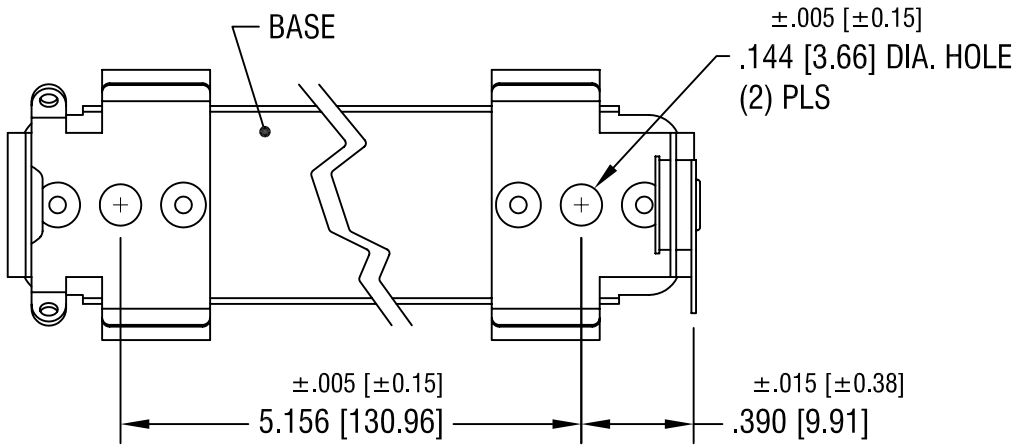

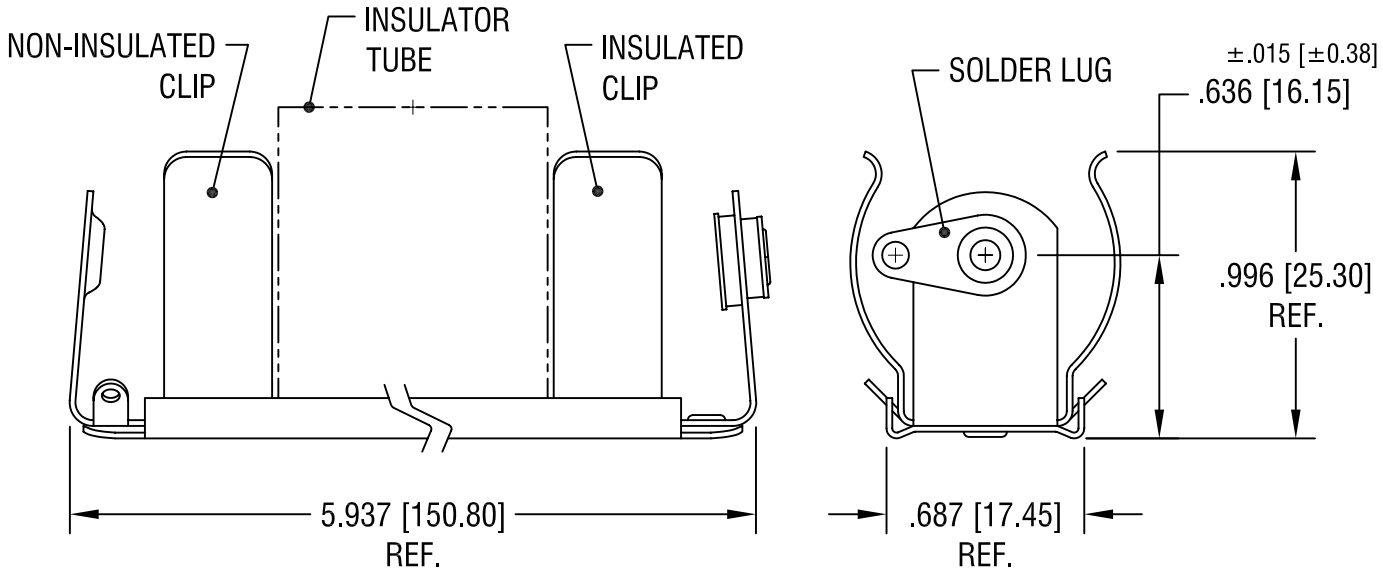

NOTES:

1. BASE: MAT'L - STAINLESS STEEL
   CLIP: MAT'L - SPRING STEEL
   FINISH - NICKEL PLATE
   LUG: MAT'L - BRASS
   FINISH - TIN PLATE
   TUBE: MAT'L - WOUND PAPER, BLACK

DATE	DESCRIPTION	REV.

KEYSTONE ELECTRONICS CORP.
ASTORIA, N.Y. 11105-2017

PART NAME: NON-INSULATED BATTERY HOLDER, (3) 'C'			
MATERIAL: AS NOTED			
FINISH: AS NOTED	DRN BY: BOONE	DATE: 5.4.07	
	APP'D: LN	SCALE: 1.5X	
TOLERANCES INCH [MM] DECIMAL ± .010 [± 0.25] ANGULAR ± 1° UNLESS OTHERWISE SPECIFIED	CODE: C	DWG NO. 1195	

AMEYA360
Components Supply Platform

Authorized Distribution Brand :

Website :

Welcome to visit www.ameya360.com

Contact Us :

- ## Address :

401 Building No.5, JiuGe Business Center, Lane 2301, Yishan Rd
Minhang District, Shanghai , China

- ## Sales :

Direct +86 (21) 6401-6692

Email amall@ameya360.com

QQ 800077892

Skype ameyasales1 ameyasales2

- ## Customer Service :

Email service@ameya360.com

- ## Partnership :

Tel +86 (21) 64016692-8333

Email mkt@ameya360.com