CTS Electrocomponents

Series 209/210 Data Sheet
Through Hole DIP Switch

AUTO-DIP® Switch Automatically Insertable, Wave Solderable, Board Washable DIP Switch

Features

Optimized Mechanical Features

- Fully sealed to withstand insertion shock, wave solder temperatures, and board washing
- Positive detent separated from contactor
- Compatible with Amistar, DynaPert, Universal, NETCO assembly and other machines

Optimized Contact System

- Redundant, wiping contact
- Contactor does not deflect during actuation
- Available low profile, medium and extended height actuator

Materials

- Series 209 - gold plated beryllium copper contacts
- Series 210 - gold flash plated beryllium copper contacts
- High temperature materials (UL94V-0)
- RoHS compliant

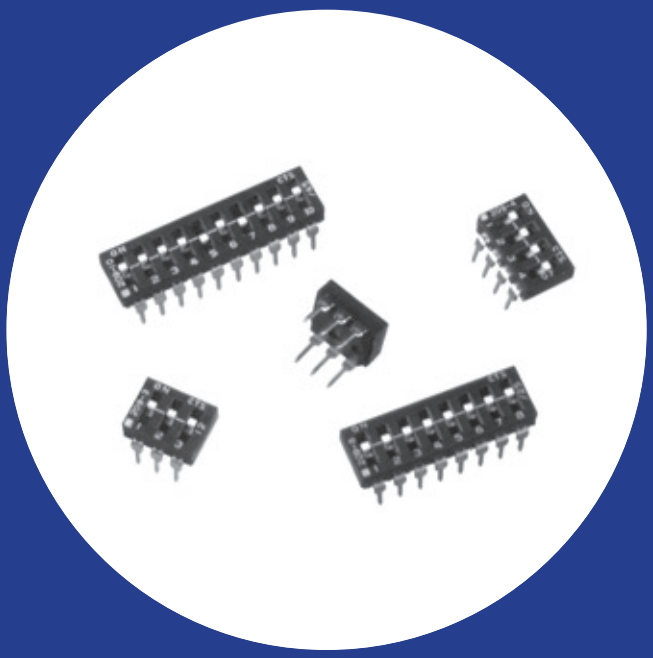

Series 209 – Premium AUTO-DIP Switches
Series 210 – Economical AUTO-DIP Switches

Electrical and Mechanical Specifications

Switch Function
SPST- 2 through 10 and 12 positions

Switch Contact Resistance

Switch Series	Initial, max.	End of life, max.
209	25 milliohms	50 millohms
210	100 milliohms	500 millohms

Insulation Resistance
1,000 megohms minimum between insulated terminals

Dielectric Strength
500 VDC for 1 minute between adjacent switches

Nonswitching Rating
100 mA or 50 VDC maximum

Switch Capacitance
5 pF maximum between adjacent closed switches

Actuation Life
Series 209: 2,000 cycles switching @ 100 mA, 20 VDC or @ .1 mA, 5 VDC (dry circuit)
Series 210: 1,000 cycles switching @ 100 mA, 20 VDC or @ .1 mA, 5 VDC (dry circuit)

Allowable Solder Time
Up to 5 seconds at 260°C

Vibration
Per MIL-STD-202F, method 204D, condition B (.06" or 15 G's between 10 HZ to 2K HZ) with no contact inconsistencies greater than 1 microsecond.

Shock
Per MIL-STD-202F, method 213B, condition A (50 G's) with no contact inconsistencies greater than 1 microsecond.

Sealing
Standard bottom seal
Optional top tape seal

Operating Temperature
–40°C to +85°C

Packaging
Standard : Anti-Static tube packaging

© 2008 CTS Corporation. All rights reserved. Information subject to change.

CTS AUTO-DIP® SERIES CONTACT FEATURES

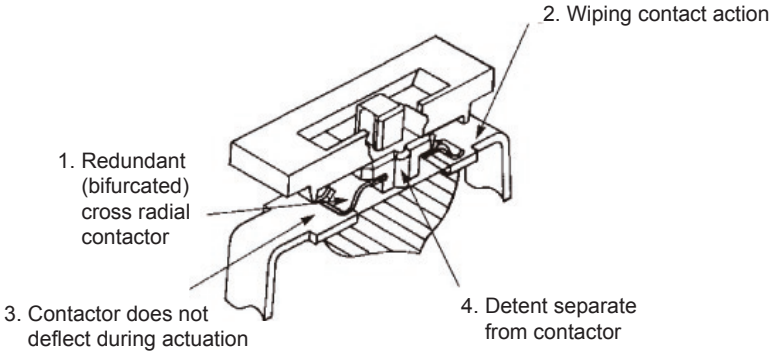

1. **Value of Redundant (Bifurcated) Contacts:** Redundancy dramatically reduces the probability of contact failure, IMPROVING RELIABILITY.
2. **Value of Wiping Contact Action:** Clean contact area, IMPROVING RELIABILITY.
3. **Value of Contactor Not Deflecting During Actuation :** Constant contact pressure eliminates overstressing contacts, IMPROVING RELIABILITY.
4. **Value of Detent Separate from Contactor:** Separate detent allows optimization of nondeflecting contactor and detent designs, IMPROVING RELIABILITY.

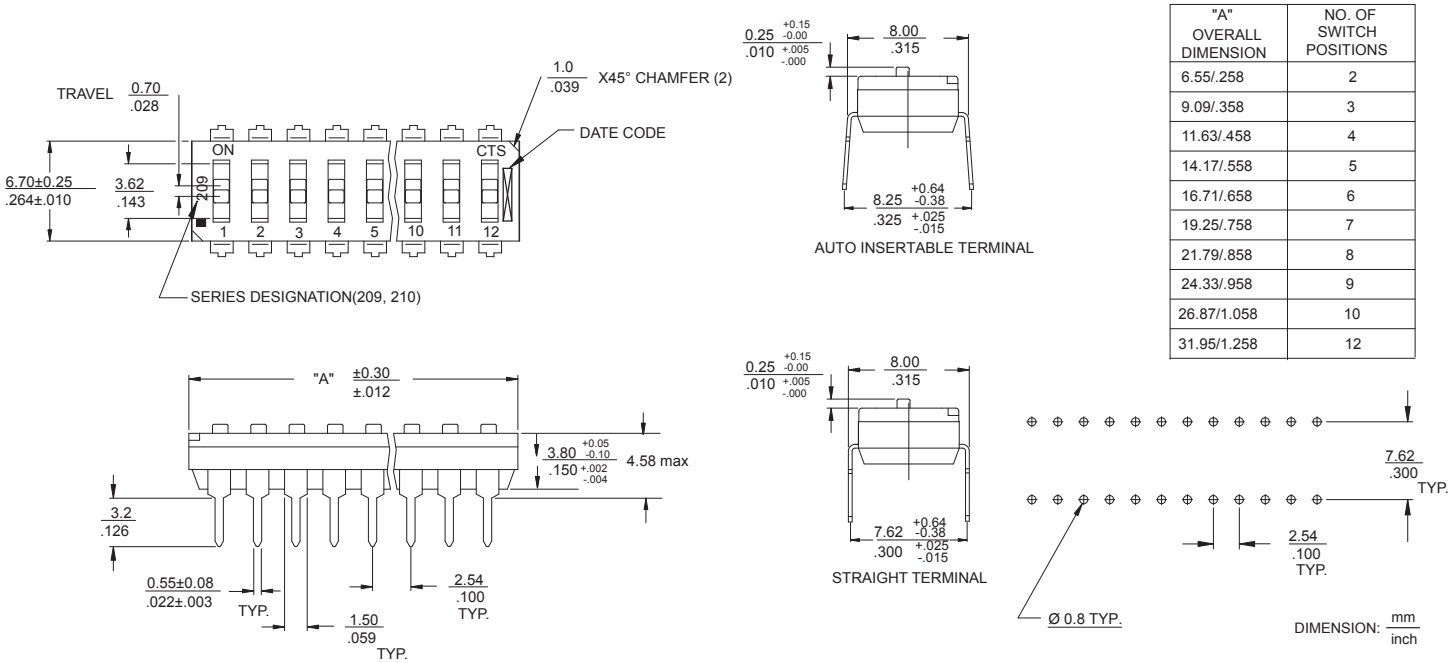

"A" OVERALL DIMENSION	NO. OF SWITCH POSITIONS
6.55/.258	2
9.09/.358	3
11.63/.458	4
14.17/.558	5
16.71/.658	6
19.25/.758	7
21.79/.858	8
24.33/.958	9
26.87/1.058	10
31.95/1.258	12

Ordering Information

209/210 – 12 M S T F D

XX: NO. OF POSITION

E: EXTENDED HEIGHT ACTUATOR(0.6mm/.024")
M: MEDIUM ACTUATOR(0.25mm/.010")
LP: LOW PROFILE (Flush)

S: BOTTOM SEAL

BLANK : NO TOP TAPE SEAL
*** T**: TOP TAPE SEAL
***** Not available on Extended actuator

BLANK : SHIP AT ON POSITION
F : SHIP AT OFF POSITION

BLANK : AUTO-INSERTABLE TERMINAL
D : STRAIGHT TERMINAL

© 2008 CTS Corporation. All rights reserved. Information subject to change.

AMEYA360
Components Supply Platform

Authorized Distribution Brand :

Website :

Welcome to visit www.ameya360.com

Contact Us :

- ### Address :

  401 Building No.5, JiuGe Business Center, Lane 2301, Yishan Rd
  Minhang District, Shanghai , China

- ### Sales :

  Direct +86 (21) 6401-6692

  Email amall@ameya360.com

  QQ 800077892

  Skype ameyasales1 ameyasales2

- ### Customer Service :

  Email service@ameya360.com

- ### Partnership :

  Tel +86 (21) 64016692-8333

  Email mkt@ameya360.com