ASMT-Bx20

PCB Based Subminiature Lamps (PCB PolyLED)

Data Sheet

Description

The ASMT-Bx20 is an environmental friendly green product of unique PCB based subminiature lamps, namely PCB PolyLED. These PolyLEDs come in un-tinted, non-diffused package to cater for various product themes and ease handling applications.

The small size, narrow footprint, and high brightness make these LEDs excellent for backlighting, status indication, and panel illumination applications.

The available colors are AlInGaP Red, AlInGaP Green, InGaN Blue, and AlInGaP Amber.

In order to facilitate pick and place operation, these PCB PolyLEDs are shipped in tape and reel, with 1500 units per reel. The package is compatible with reflow soldering and binned by both color and intensity.

Features

- Small foot print
- Available in four colors
- Low power consumption
- Non-diffused dome for high brightness
- Supreme product quality and reliability
- Operating temperature range of -40 °C to +85°C
- Package in 8mm tape on 7" diameter reels
- Compatible with automated placement equipment
- Compatible with infrared and vapor phase reflow soldering process

Applications

- Panel indicator
- LCD backlighting
- Symbol backlighting
- Push-button backlighting
- Indoor mono/full color sign

Package Dimensions

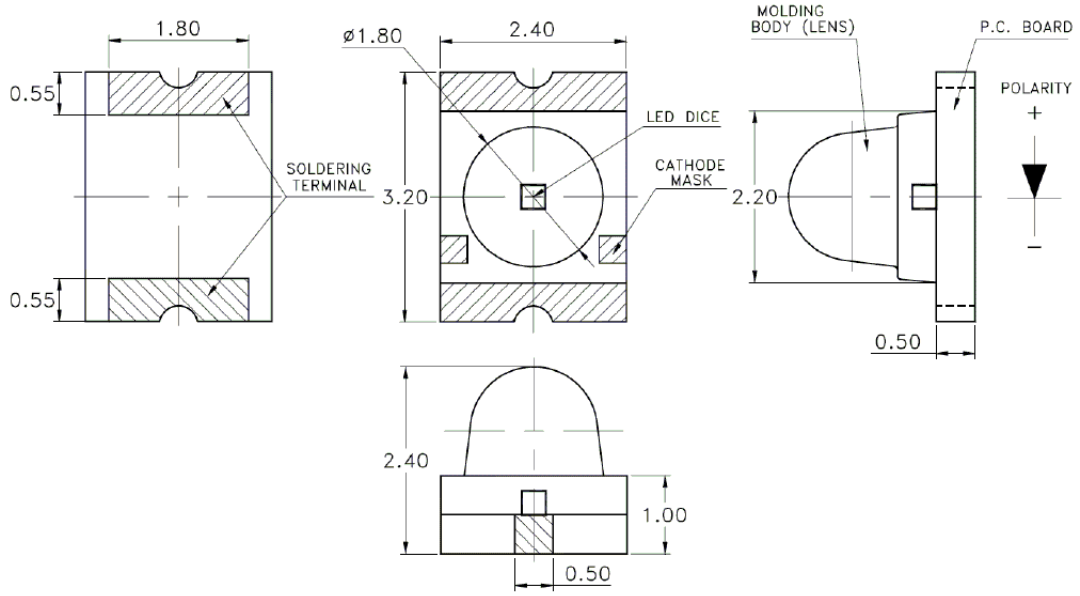

Notes:
1. All dimensions in millimeters.
2. Tolerance is ±0.1mm unless otherwise specified.

Device Selection Guide

Part Number	Die Technology	Color	Package Description
ASMT-BA20	AlInGaP	Amber	Untinted, Non-diffused
ASMT-BG20	AlInGaP	Green	Untinted, Non-diffused
ASMT-BR20	AlInGaP	Red	Untinted, Non-diffused
ASMT-BB20	InGaN	Blue	Untinted, Non-diffused

Part Numbering System

ASMT - B x 20 - x x x x 0

Color Bin Selection
Please refer to the Color Bin Limits Table.

Max Iv Bin Options
Please refer to the Iv Bin Table

Min Iv Bin Options
Please refer to the Iv Bin Table

Die Technology
A: AlInGaP
N: InGaN

Color
A: Amber
G: Green
R: Red
B: Blue

Absolute Maximum Ratings at $T_A = 25°C$

Parameter	AlInGaP	InGaN	Units
DC Forward Current[1]	30	20	mA
Reverse Voltage (I_R = 100mA)	5	5	V
LED Junction Temperature	95	95	°C
Operating Temperature Range	-40 to +85		°C
Storage Temperature Range	-40 to +85		°C
Soldering Temperature (Pb Free)	260°C for 10 seconds		

Electrical Characteristics at $T_A = 25°C$

	Forward Voltage V_F (Volts) [1] @ I_F = 20mA		Reverse Breakdown V_R (Volts) @ I_R = 100μA	Thermal Resistance $R\theta_{J\text{-}PIN}$ (°C/W)
Part Number	**Typ.**	**Max.**	**Min.**	**Typ.**
AlInGaP Amber	2.0	2.4	5	450
AlInGaP Green	2.0	2.4	5	450
AlInGaP Red	2.0	2.4	5	450
InGaN Blue	3.2	3.8	5	450

Notes:
1. Vf tolerance : ±0.1V

Optical Characteristics at $T_A = 25°C$

Part Number	Luminous Intensity I_V [1] (mcd) @ 20mA Typ.	Peak Wavelength λpeak (nm) Typ.	Dominant Wavelength λ_d [2] (nm) Typ.	Viewing Angle $2\theta_{1/2}$ [3] (Degrees) Typ.
AlInGaP Amber	750	592	590	15
AlInGaP Green	650	565	569	15
AlInGaP Red	650	635	626	15
InGaN Blue	650	470	468	15

Notes:
1. The luminous intensity IV is measured at the peak of the spatial radiation pattern which may not be aligned with the mechanical axis of the LED package.
2. The dominant wavelength, λ_d, is derived from the CIE Chromaticity Diagram and represents the perceived color of the device.
3. $\theta_{1/2}$ is the off-axis angle where the luminous intensity is ½ the peak intensity.

Light Intensity (I_V) Bin Limits [1]

	Intensity (mcd)	
Bin ID	Minimum	Maximum
P	45.00	71.50
Q	71.50	112.50
R	112.50	180.00
S	180.00	285.00
T	285.00	450.00
U	450.00	715.00
V	715.00	1125.00
W	1125.00	1800.00
X	1800.00	2850.00
Y	2850.00	4500.00

Tolerance : ±15%

Color Bin Limits [1]

Amber Color Bins [1]

	Dominant Wavelength (nm)	
Bin ID	Minimum	Maximum
1	582.0	584.5
2	584.5	587.0
3	587.0	589.5
4	589.5	592.0
5	592.0	594.5
6	594.5	597.0

Tolerance : ±1 nm

Green Color Bins [1]

	Dominant Wavelength (nm)	
Bin ID	Minimum	Maximum
1	561.5	564.5
2	564.5	567.5
3	567.5	570.5
4	570.5	573.5
5	573.5	576.5

Tolerance : ±1 nm

Red Color Bins [1]

	Dominant Wavelength (nm)	
Bin ID	Minimum	Maximum
-	620.0	635.0

Tolerance : ±1 nm

Blue Color Bins [1]

	Dominant Wavelength (nm)	
Bin ID	Minimum	Maximum
1	460.0	465.0
2	465.0	470.0
3	470.0	475.0
4	475.0	480.0

Tolerance : ±1 nm

Notes:
1. Bin categories are established for classification of products. Products may not be available in all categories. Please contact your Avago representative for information on current available bins.

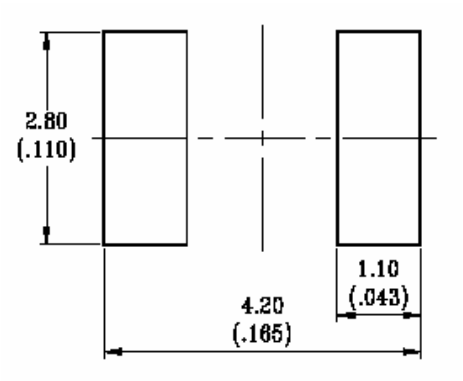

Figure 3. Recommended soldering land pattern.

Notes:
1. All dimensions are in millimeters (inches).
2. Tolerance is ±0.1mm (±0.004in.) unless otherwise specified.

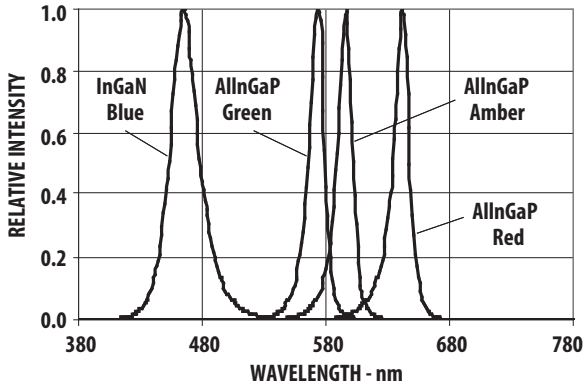

Figure 4. Relative intensity vs. wavelength

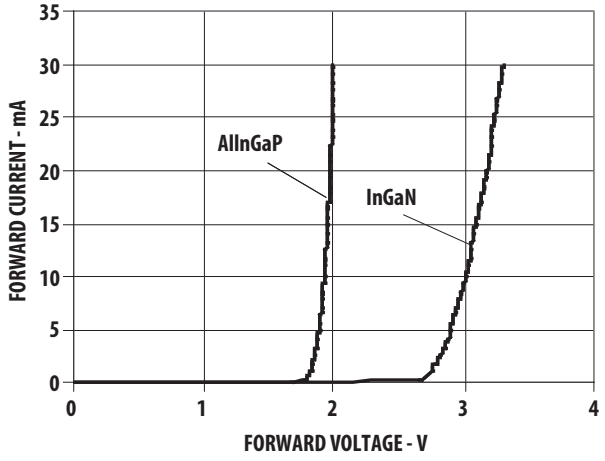

Figure 5. Forward current vs. forward voltage

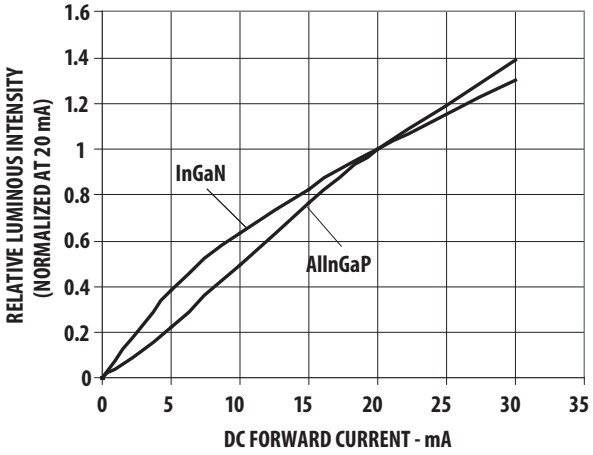

Figure 6. Relative luminous intensity vs. DC forward current

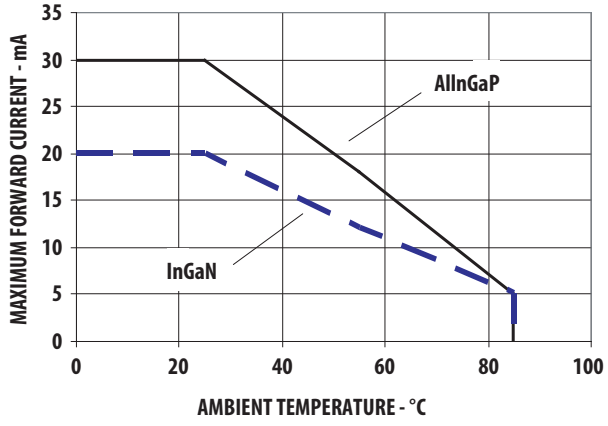

Figure 7. Maximum forward current vs. ambient temperature
For AlInGap & InGaN Derating based on TJMAX = 95°

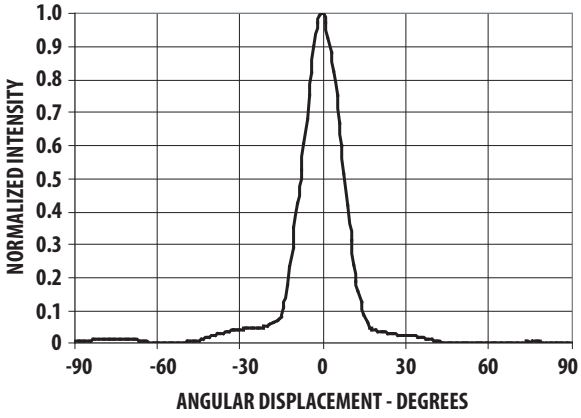

Figure 8. Radiation Pattern

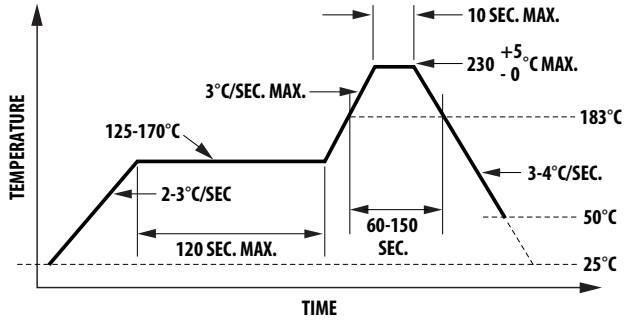

Figure 9. Recommended reflow soldering profile

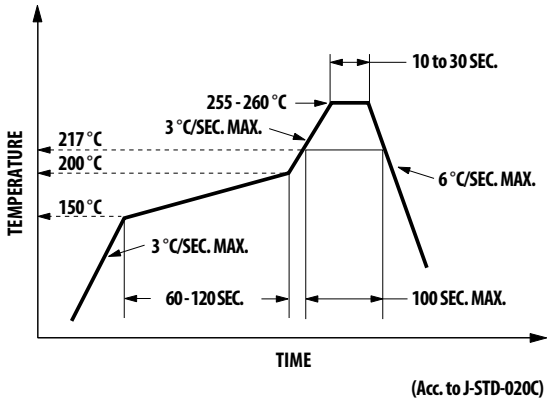

Figure 10. Recommended Pb-free reflow soldering profile

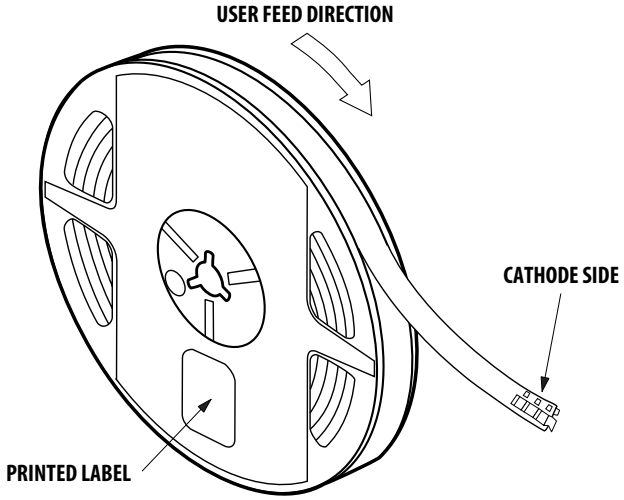

Figure 11. Reeling orientation

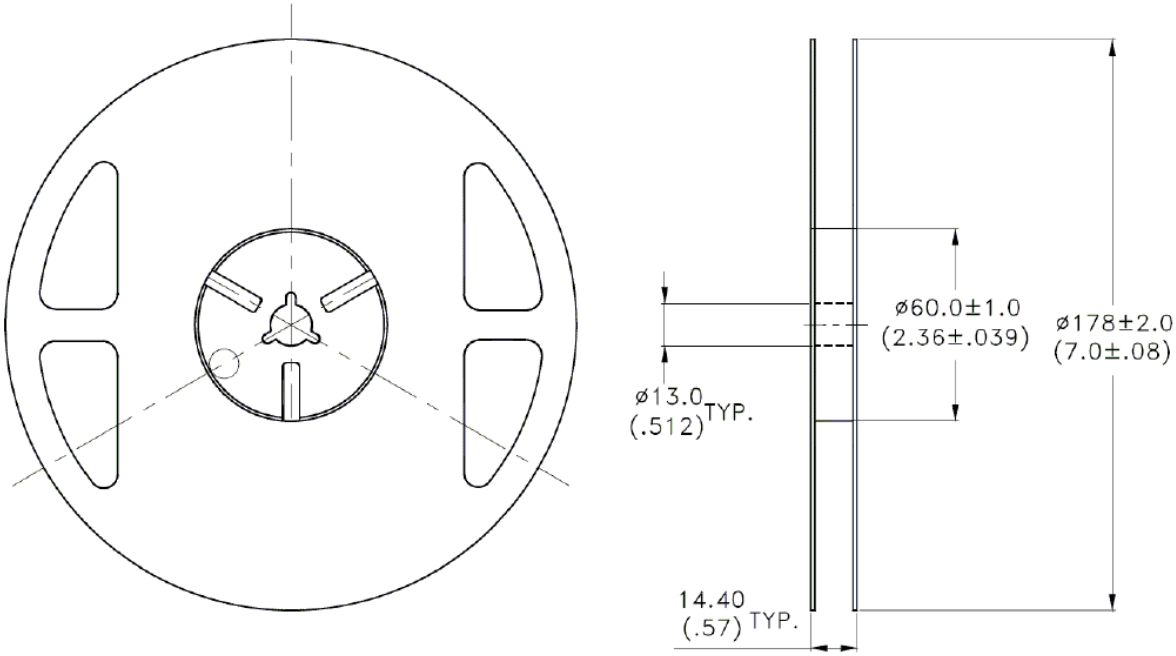

Figure 12. Reel dimensions [1]

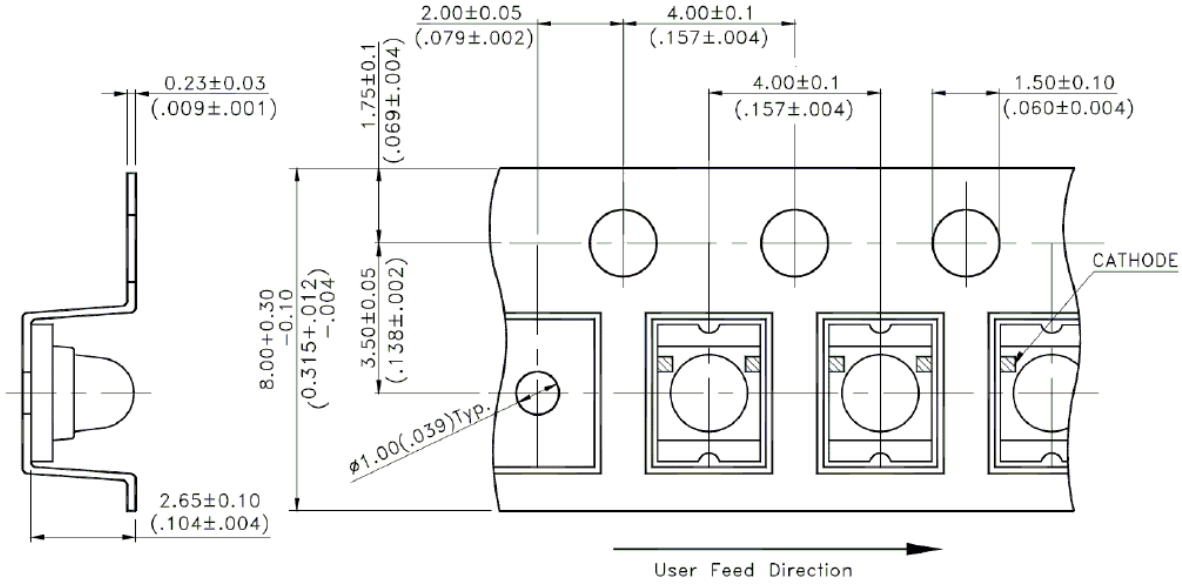

Figure 13. Tape dimensions [1]

Notes:
1. All dimensions are in millimeters (inches).

For product information and a complete list of distributors, please go to our web site: **www.avagotech.com**

Avago, Avago Technologies, and the A logo are trademarks of Avago Technologies in the United States and other countries.
Data subject to change. Copyright © 2005-2008 Avago Technologies. All rights reserved.
AV02-0389EN - August 29, 2008

AMEYA360
Components Supply Platform

Authorized Distribution Brand :

Website :

Welcome to visit www.ameya360.com

Contact Us :

- ## Address :

401 Building No.5, JiuGe Business Center, Lane 2301, Yishan Rd
Minhang District, Shanghai , China

- ## Sales :

Direct +86 (21) 6401-6692

Email amall@ameya360.com

QQ 800077892

Skype ameyasales1 ameyasales2

- ## Customer Service :

Email service@ameya360.com

- ## Partnership :

Tel +86 (21) 64016692-8333

Email mkt@ameya360.com